Panasonic

Operating Instructions (Overall)

AC Servo Motor & Driver
MINAS A6 series

* This product image is 100 W 200 V type of A6 series.

- Thank you for purchasing this Panasonic product.
- Before operating this product, please read the instructions carefully, and save this manual for future use.
- Read the the Safety Operating Instructions before using the products (P.6 to 9).
- This product is for industrial equipment. Don’ t use this product at general household.

Thank you for purchasing Digital AC Servo Motor & Driver, MINAS A6 series. This instruction manual contains information necessary to correctly and safely use the MINAS A6 series motor and driver. By reading this instruction manual, you will learn how to identify the model of the motor and driver that will be best suitable your application, how to wire and set up them, how to set parameters, and how to locate possible cause of symptom and to take corrective action.

For details on "Modbus communication" and "block operation function", refer to the technical data (Modbus communication specifications / block operation function).
Please download and check the Technical data (Modbus communication specifications / block operation function) from our website.

This is the original instruction.

Caution

1) Any part or whole of this document shall not be reproduced without written permission from us.
2) Contents of this document are subject to change without notice.

Note

1) 400 V specification motors are not sold in Japan. In addition, 400 V specification motors purchased outside Japan and equipment equipped with 400 V specification motors cannot be brought into Japan.

Organization of this manual

1.Before Using the Products

Check of the Driver Model ... Installation

Describes how to identify and select the desired product and components, how to read the specifications, and how to install the equipment.

2.Preparation

Operating requirements and procedure

Shows the timing chart and the list of parameters, and describes how to make wiring and to use the front panel.

3.Connection

Wiring ... I/O settings

Shows block diagrams for each control mode and connection diagrams to the host controllor, I/O settings.

4.Setup

Describes parameters ... JOG running

Shows describes parameters and procedure of test operation.

5.Adjustment

Gain adjustment ... Auto tuning

Describes various adjusting method including auto tuning and manual gain tuning.

6.When in Trouble

Read this section when you encounter trouble or error.

7.Supplement

Contains S-T characteristic diagram, dimensional outline drawing, supplemental description on communications and operation.

Contents

page

Organization of this manual 3
Safety Precautions 6
Conformance to international standards 10
Maintenance and Inspections 12

1. Before Using the Products 1-1

1. Introduction 1-2
2. Driver 1-8
3. Motor 1-29
4. Check of the Combination of the Driver and the Motor 1-34
5. Installation 1-37
6. Permissible Load at Output Shaft 1-44

2. Preparation 2-1

1. Conformance to international standards 2-4
2. System Configuration and Wiring 2-12
3. Wiring to the Connector, X1 2-63
4. Wiring to the Connector, X2 2-63
5. Wiring to the Connector, X3 2-65
6. Wiring to the Connector, X4 2-66
7. Wiring to the Connector, X5 2-67
8. Wiring to the Connector, X6 2-69
9. Timing Chart 2-74
10. Built-in Holding Brake 2-78
11. Dynamic Brake 2-80
12. Setup of Parameter and Mode 2-85
13. Setup of command division and multiplication ratio (electronic gear ratio) 2-108
14. How to Use the Front Panel 2-110

3. Connection 3-1

1. Outline of mode 3-2
2. Control Block Diagram 3-15
3. Wiring to the Connector, X4 3-22
4. Inputs and outputs on connector X4 3-34
5. IF Monitor Settings 3-55

page

4. Setup 4-1

1. Describes parameters 4-2
2. Trial Run (JOG run) 4-88

5. Adjustment 5-1

1. Gain Adjustment 5-2
2. Real-Time Auto-Gain Tuning 5-4
3. Adaptive filter 5-27
4. Manual Auto-Gain Tuning (Basic) 5-30
5. Manual Auto-Gain Tuning (Application) 5-41
6. About Homing Operation 5-71
7. Application function 5-74

6. When in Trouble 6-1

1. When in Trouble 6-2
2. Setup of gain pre-adjustment protection 6-29
3. Troubleshooting 6-32

7. Supplement 7-1

1. Safety function 7-3
2. Absolute System 7-12
3. Outline of Setup Support Software, "PANATERM" 7-28
4. Communication 7-29
5. Block Motion 7-60
6. Motor Characteristics (S-T Characteristics) 7-61
7. Dimensions 7-93
8. Options 7-156
9. License Terms for Open Source Software (OSS) 7-203

Warranty 7-204

Cautions for Proper Use 7-205

Revisions 7-206

After-Sale Service ..... Back cover

Safety Precautions

Please observe safety precautions fully.

The following explanations are for things that must be observed in order to prevent harm to people and damage to property.

- Misuses that could result in harm or damage are shown as follows, classified according to the degree of potential harm or damage.

⚠ Danger	Indicates great possibility of death or serious injury.
⚠ Caution	Indicates the possibility of injury or property damage.

- The following indications show things that must be observed.

🛇	Indicates something that must not be done.
❗	Indicates something that must be done.

⚠ Danger

🛇	Do not subject the Product to water, corrosive or flammable gases, and combustibles.	Failure to observe this instruction could result in fire, electrical shocks, damages and breakdowns.
	Do not place combustibles near by the motor, driverd regenerative resistor and dynamic brake resister.	
	Don't use the motor in a place subject to excessive vibration or shock.	Failure to observe this instruction could result in electrical shock, injury or fire.
	Don't use cables soaked in water or oil.	Failure to observe this instruction could result in electrical shocks, damages and breakdowns.
	The installation area should be away from heat generating objects such as a heater and a large wire wound resistor.	Failure to observe this instruction could result in fire and breakdowns.
	Never connect the motor directly to the commercial power supply.	
	Don't attempt to carry out wiring or manual operation with wet hand.	Failure to observe this instruction could result in electrical shock, injury or fire.
	Do not put your hands in the servo driver.	Failure to observe this instruction could result in burn and electrical shocks.

	In the case of the motor with shaft end keyway, do not touch the keyway with bare hands.	Failure to observe this instruction could result in personal injury.
	Do not touch the rotating portion of the motor while it is running. Failure to observe this instruction could result in damages and breakdowns.	
	Do not touch the motor, servo driver, heat sink, regenerative resistor and dynamic brake resister, since they become very hot.	Failure to observe this instruction could result in burns.
	Do not drive the motor with external power.	Failure to observe this instruction could result in fire.
	Do not subject the cables to excessive force, heavy object, or pinching force, nor damage the cables.	Failure to observe this instruction could result in electrical shocks, damages and breakdowns.
	Installation area should be free from excessive dust, and from splashing water and oil.	Failure to heed this precaution will result in electric shock, personal injury, fire, malfunction or damage.
	Mount the motor, driver and peripheral equipments on incombustible material such as metal.	Installation on a flammable material may cause fire.
	Wiring has to be carried out by the qualified and authorized specialist.	Allowing a person with no expertise to carry out wiring will result in electrical shocks.
	Correctly run and arrange wiring.	Incorrect wiring will result in short circuit, electric shock, personal injury, etc.
	After correctly connecting cables, insulate the live parts with insulator.	Incorrect wiring will result short circuit, electric shock, fire or malfunction.
	Ground the earth terminal of the motor and driver without fail.	Floating ground circuit will cause electric shock.
	Install and mount the Product and machinery securely to prevent any possible fire or accidents incurred by earthquake.	Failure to heed this requirement will result in electric shock, personal injury, fire, malfunction or damage.
	Install an emergency stop circuit externally so that you can stop the operation and shut off the power immediately.	
	Install an overcurrent protection, earth leakage breaker, over-temperature protection and emergency stop apparatus without fail.	Failure to heed these requirements will result in electric shock, personal injury or fire.
	Check and confirm the safety of the operation after the earthquake.	
	Before transporting, wiring and inspecting the driver, turn off power and wait for a time longer than that specified on the name plate on the side panel of the product; and make sure that there is no risk of electrical shock.	Energized circuit will cause electric shock.

Caution

	Do not hold the motor cable or motor shaft during the transportation.	Failure to observe this instruction could result in injuries.
	Don't drop or cause topple over of something during transportation or installation.	Failure to observe this instruction could result in injuries and breakdowns.
	Do not step on the Product nor place the heavy object on them.	Failure to observe this instruction could result in electrical shocks, injuries, breakdowns and damages.
	Don’ t place any obstacle object around the motor and peripheral, which blocks air passage.	Temperature rise will cause burn injury or fire.
	Don't use the equipment under direct sunshine.	Failure to heed these instructions will cause personal injury or fire.
	Do not block the heat dissipating holes or put the foreign particles into them.	Failure to observe this instruction could result in electrical shocks and fire.
	Do not give strong impact shock to the Product.	Failure to observe this instruction could result in breakdowns.
	Do not give strong impact shock to the motor shaft.	Failure to observe this instruction could result in a failure of the detector etc.
	Do not turn on and off the main power of the driver repeatedly.	Failure to observe this instruction could result in breakdowns.
	Never run or stop the motor with the electro-magnetic contactor installed in the main power side.	
	Do not make an extreme gain adjustment or change of the drive. Do not keep the machine running/operating unstably.	Failure to observe this instruction could result in injuries.
	Do not use the built-in brake as a "Braking" to stop the moving load.	Failure to observe this instruction could result in injuries and breakdowns.
	Do not approach to the machine since it may suddenly restart after the power resumption. Design the machine to secure the safety for the operator even at a sudden restart.	Failure to observe this instruction could result in injuries.
	Never attempt to perform modification, dismantle or repair.	Failure to heed this instruction will result in fire, electric shock, personal injury or malfunction.

!	Make an appropriate mounting of the Product matching to its wight and output rating.	Failure to heed these requirements will result in personal injury or malfunction.
	Observe the specified mounting method and direction.	
	Use the eye bolt of the motor for transportation of the motor only, and never use this for transportation of the machine.	Using it for transportation of the machine will cause personal injury or malfunction.
	Adjust the motor and driver ambient environmental condition to match the motor operating temperature and humidity.	Failure to heed these requirements will result in personal injury or malfunction.
	Create the specified clearance between the driver and the control panel inner surface or other devices.	
	Observe the specified voltage.	Operation from a voltage outside the rated voltage will cause electric shock, personal injury or fire.
	Connect the brake control relay to the relay which is to shut off at emergency stop in series.	Missing of one of these devices will result in personal injury or malfunction.
	Provide protection device against idling of electromagnetic brake or gear head, or grease leakage from gear head.	No protection will cause personal injury, damage, pollution or fire.
	Use the motor and the driver in the specified combination.	Not using the motor and the driver in the specified combination will result in fire.
	Test-run the securely fixed motor without loading to verify normal operation, and then connect it to the mechanical system.	Operation using a wrong model or wrong wiring connection will result in personal injury.
	When any error occurs, remove the cause and release the error after securing the safety, then restart.	Not removing the cause of the error will result in personal injury.
	If the driver fails, shut off the power on the power supply side of the driver.	Allowing a large current to continue to pass will result in fire.
	Always keep power disconnected when the power is not necessary for a long time.	Improper operation will cause personal injury.
	When you dispose the batteries, observe any applicable regulations or laws after insulating them with tape.	
	This Product shall be treated as Industrial Waste when you dispose.	

Conformance to international standards

(A6 series SF type)(A6 series SE, SG type)

Conformed Standards

		Driver	Motor
EU/UK Standards	EMC	EN 55011 EN 61000-6-2 EN 61000-6-4 EN 61800-3	–
	Low-Voltage	EN 61800-5-1	EN 60034-1 EN 60034-5
	Machinery (Functional safety)*1	EN ISO 13849-1:2015 EN 61508 EN IEC 62061 EN 61800-5-2 EN 61326-3-1 IEC 60204-1	–
UL Standards		UL 61800-5-1 (E164620)	UL 1004-1, UL 1004-6 (E327868)
CSA Standards		C22.2 No.274	C22.2 No.100-04
Radio Waves Act (South Korea) (KC)*2		KN 11 KN 61000-4-2, 3, 4, 5, 6, 8, 11	—

IEC : International Electrotechnical Commission
EN : Europaischen Normen
EMC: Electromagnetic Compatibility
UL : Underwriters Laboratories
CSA : Canadian Standards Association

■ Authorized Representative in EU
Panasonic Marketing Europe GmbH
Panasonic Testing Centre
Winsbergring 15, 22525 Hamburg, Germany

■ Authorized Representative in UK
Panasonic UK, a branch of Panasonic
Marketing Europe GmbH, Maxis 2,
Western Road, Bracknell, Berkshire, RG12 1RT

Note For details on compatibility with international standard, refer to P.2-4 Conformance to international standards.

Conformance to international standards

Conformed Standards

Safety Paramter

	Diagnosis based on EDM	No diagnosis based on EDM
Safety Integrity Level	EN 61508(SIL 3) EN IEC 62061(maximum SIL 3)	EN 61508(SIL 2) EN IEC 62061(maximum SIL 2)
Performance level	EN ISO 13849-1 PL e (Cat.3)	EN ISO 13849-1 PL d (Cat.3)
Safety function	EN 61800-5-2 (SIL 3,STO)	EN 61800-5-2(SIL 2,STO)
Hazardous failure probability per hour	<For size A, B, C, D, E, F> PFH=1.34 × 10^{-8} (% SIL3=13.4 %) <For size G and H> PFH=1.78 × 10^{-8} (% SIL3=17.8 %)	<For size A, B, C, D, E, F> PFH=1.40 × 10^{-8} (% SIL2=14.0 %) <For size G and H> PFH=1.85 × 10^{-8} (% SIL2=18.5 %)
Average time of hazardous failure	MTTFd: High(100 years)	MTTFd: High(100 years)
Average self-diagnosis rate	DC: Medium	DC: Low
Task time	15 years	15 years

- When export this product, follow statutory provisions of the destination country.

*1 A6 series SE type and SG type don' t correspond to the functional safety standards.
*2 Information related to the Radio Waves Act (South Korea)
This servo driver is a Class A commercial electromagnetic radio wave generator not designed for home use. The user and distributor should be aware of this fact.

A 급 기기 (업무용 방송통신기자재)
이 기기는 업무용(A 급) 전자파적합기기로서 판매자
또는 사용자는 이 점을 주의하시기 바라며, 가정외의
지역에서 사용하는 것을 목적으로 합니다.

(대상기종 : Servo Driver)

This product is not an object of China Compulsory Certification (CCC).

Maintenance and Inspections

Routine maintenance and inspection of the driver and motor are essential for the proper and safe operation.

Notes on Maintenance and Inspection

1)Turn on and turn off should be done by operators or inspectors themselves. When establishing a system using safety functions, completely understand the applicable safety standards and the operating instruction manual or technical documents for the product.
2)Internal circuit of the driver is kept charged with high voltage for a while even after power-off. Turn off the power and allow 15 minutes or longer after LED display of the front panel has gone off, before performing maintenance and inspection.
3)Disconnect all of the connection to the driver when performing megger test (Insulation resistance measurement) to the driver, otherwise it could result in breakdown of the driver.
4)Do not use benzine, thinner, alcohol, acidic cleaner and alkaline cleaner because they can discolor or damage the exterior case.

Inspection Items and Cycles

General and normal running condition

Ambient conditions : 30 ℃ (annual average), load factor of 80 % or lower, operating hours of 20 hours or less per day.

Perform the daily and periodical inspection as per the items below.

Type	Cycles	Items to be inspected
Daily inspection	Daily	• Ambient temperature, humidity, speck, dust or foreign object • Abnormal vibration and noise • Main circuit voltage • Odor • Lint or other particles at air holes • Cleanness at front portion of the driver and connector • Damage of the cables • Loose connection or misalignment between the motor and machine or equipment • Pinching of foreign object at the load
Motor with Gear Reducer	Annual	• Loose tightening • Trace of overheat • Damage to the terminal block • Loose fasteners on terminal block

Note Inspection cycle may change when the running conditions of the above change.

Guideline for Parts Replacement

Use the table below for a reference. Parts replacement cycle varies depending on the actual operating conditions. Defective parts should be replaced or repaired when any error have occurred.

Prohibited	Disassembling for inspection and repair should be carried out only by authorized dealers or service company.

Product	Component	Standard replacement cycles (hour)	Note
Driver	Smoothing condenser	Approx. 5 years	These hours or cycles are reference. When you experience any error, replacement is required even before this standard replacement cycle.
	Cooling fan	2 to 3 years (10000 to 30000 hours)	
	Aluminum electrolytic capacitor (on PCB)	Approx. 5 years	
	Rush current preventive relay	Approx. 100000 times (depending on working condition)	
	Rush current preventive resistor	Approx. 20000 times (depending on working condition)	
Motor	Bearing	3 to 5 years (20000 to 30000 hours)	
	Oil seal	5000 hours	
	Encoder	3 to 5 years (20000 to 30000 hours)	
	Battery for absolute encoder	Life time of battery read P7-15 please.	

Related page • P.7-204 “Warranty”

MEMO

1. Before Using the Products

1. Introduction
Outline 1-2
On Opening the Product Package 1-7
2. Driver
Check of the Model 1-8
Parts Description
A to B-frame 1-9
C to D-frame 1-9
E-frame 1-10
F-frame 1-10
G-frame 1-11
H-frame 1-12
D-frame(400 V) 1-13
E-frame(400 V) 1-13
F-frame(400 V) 1-14
G-frame(400 V) 1-15
H-frame(400 V) 1-16
Specifications 1-17
Block Diagram 1-24
3. Motor
Check of the Model 1-29
Parts Description 1-32
4. Check of the Combination of the Driver and the Motor
Absolute Specifications, 23-bit 1-34
5. Installation
Driver 1-37
Motor 1-41
6. Permissible Load at Output Shaft
Motor 1-44

1. Introduction

Outline

MINAS A6 series AC Servo Motor & Drivers are the brand new servo system that fulfills all requirements from various types of machines such as high-speed, high-precision, high performance and easy setup and adjustment.

Accomplishing an overwhelming performance improvement over traditional A5 series, it comes standard equipped with the feature of 2DOF(Two-degree-of-freedom) control scheme which became popular in A5II series. Also by further possible easy setup and adjustment, anyone can feel the high-performance of this new product.

Newly designed products have wide range of outputs from 50 W to 22 kW, equipped with high-resolution 23-bit Absolute encoder; it makes possible more accurate positioning and mechanical drive.

In addition, the “FIT gain” function of PANATERM which was available only at A5II series will become available in all models of A6 series. Moreover, auto-adjustment function makes possible high-speed and high-precision adjustment more easily and in a signiticantly reduced short period of time.

Besides, we have ensured the compatibility betweetn A5 series and A6 series. Four control modes (Position, Speed, Torque and Full-closed) used in A5 series will be continuously equipped in A6 series and parameter specificatioins will be compatible as well. Furthermore, we have improved damping control, added extra one frequency selectable notch filter, and made it possible to control two damping filters during 2DOF.

By simply replacing conventional model to A6 series you can expect improved performance of your equipment.

These products assure higher stablility at low-stiffness machines and high-precision and high-speed operation at high-stiffness machines. These products can correspond to wide range of machines.

This manual is written as a guide for you so that can fully correctly make use of all functions and advantages of New MINAS A6 series.

Yet, we have prepared position control type ,communication type and multi-function type of MINAS A6 series.This manual has been guiding based on featuers of multi-function type model. Please be aware that some specified features of the multi-function type might not be available in the position control type.

When incremental data want to be used with traditional A5 series, you can use A6 series 23-bit Absolute encoder(multi-turn data is not be used).

The position control type, communication type and multi-function type with the following different specifications.

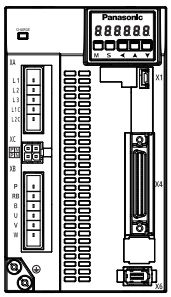
Position control Type
(SE)

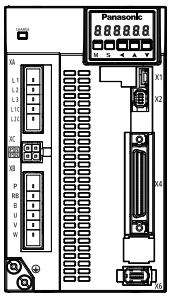
Communication Type
(SG)

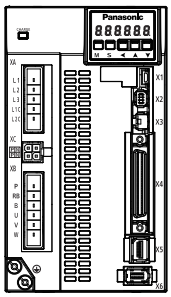
Multi-function Type
(SF)

Function		Position control type	Communication Type	Multi-function Type
USB communication		○	○	○
Absolute system			○	○
RS232/485 communication			○	○
Modbus communication*1			○	○
Block Operation*1	By Modbus communication		○	○
	By input signal	○	○	○
Safety function				○
Command pulse input		○	○	○
Analog voltage input				○
Feedback scale connect				○

Connector	Position control type	Communication Type	Multi-function Type
X1: USB connector	○	○	○
X2: Serial communication connector		○	○
X3: Safety function connector			○
X4: I/O connector	○	○	○
X5: Feedback scale connector			○
X6: Encoder connector	○	○	○

The function and connection in this book to enable / disable the following is supplemented by the table.
Example can be used only in the multi-function type.

SE	SG	SF
		○

SE: Position control type
SG: Communication type
SF: Multi-function type

*1 The RS232 communication and RS485 communication is the “MINAS standard protacol” .
The detial of “Modbus communication” , “Block operation” refer to technical reference of Modbus communication and Block operation Specification witch can download from HP.

<Software version>
This document is applicable to the following software versions of servo drivers.
CPU1Ver. : Ver.1.17
CPU2Ver. : Ver.1.17
* Please confirm the software version by installing debugging software (PANATERM) or front panel.

<table>
<tr><th>Software version</th><th>Function change description</th><th>Corresponding PANATERM</th></tr>
<tr><td>CPU1 Ver1.07
CPU2 Ver1.07</td><td>Functional extension version 3
<table>
<tr><th>Additional function</th><th>Relevant items</th></tr>
<tr><td rowspan="2">1) Extension of representation function range of manufacturing serial number</td><td>Technical reference(basic functional specifications)
3-2-1, 9-3-7</td></tr>
<tr><td>Technical reference (Modbus communication and Block operation Specification)</td></tr>
</table></td><td>6.0.1.6
or later</td></tr>
<tr><td>CPU1 Ver1.09
CPU2 Ver1.09</td><td>Functional extension version 4
<table>
<tr><th>Additional function</th><th>Relevant items</th></tr>
<tr><td>1) Command pulse inhibition (INH) specification extension</td><td>Technical reference(basic functional specifications)
2-1, 4-2-7, 9-1-6</td></tr>
<tr><td>2) Analog zero clamp input setting range extension</td><td>Technical reference(basic functional specifications)
4-3, 4-4, 6-2, 9-1-5</td></tr>
<tr><td>3) Deterioration diagnosis warning function specification extension</td><td>Technical reference(basic functional specifications)
6-9, 9-1-7</td></tr>
</table></td><td>6.0.1.12
or later</td></tr>
<tr><td>CPU1 Ver1.10
CPU2 Ver1.10</td><td>Functional extension version 5
<table>
<tr><th>Additional function</th><th>Relevant items</th></tr>
<tr><td>1) Current response improvement
・Pr6.11(Current response setting) setting range extension</td><td>Technical reference(basic functional specifications)
9-1-7</td></tr>
</table></td><td>6.0.1.13
or later</td></tr>
<tr><td>CPU1 Ver1.11
CPU2 Ver1.11</td><td>Functional extension version 6
<table>
<tr><th>Additional function</th><th>Relevant items</th></tr>
<tr><td rowspan="2">1) Absolute date range extension</td><td>Technical reference(basic functional specifications)
7-2</td></tr>
<tr><td>Technical reference (Modbus communication and Block operation Specification)</td></tr>
</table></td><td>6.0.1.13
or later</td></tr>
<tr><td>CPU1 Ver1.12
CPU2 Ver1.12</td><td>Functional extension version7
<table>
<tr><th>Additional function</th><th>Relevant items</th></tr>
<tr><td rowspan="2">1) Pulse train control when Block operation is enabled</td><td>Technical reference(basic functional specifications)
4-2-2, 4-2-5, 4-2-7, 6-5-1, 7-2, 9-1-7</td></tr>
<tr><td>Technical reference (Modbus communication and Block operation Specification)</td></tr>
<tr><td rowspan="2">2) Position compare function extension</td><td>Technical reference(basic functional specifications)
2-1, 2-3-1, 6-7, 9-1-6</td></tr>
<tr><td>Technical reference (Modbus communication and Block operation Specification)</td></tr>
<tr><td>3)Method for detection of origin location 15
(Actual position set)</td><td>Technical reference (Modbus communication and Block operation Specification)</td></tr>
</table></td><td>6.0.4.0
or later</td></tr>
</table>

<table>
<tr><th>Software version</th><th>Function change description</th><th>Corresponding PANATERM</th></tr>
<tr><td>CPU1 Ver1.13
CPU2 Ver1.13</td><td>Functional extension version 8
<table>
<tr><th>Additional function</th><th>Relevant items</th></tr>
<tr><td>Acceleration and deceleration of block operation unit extension</td><td>Technical reference (Modbus communication and Block operation Specification)</td></tr>
</table></td><td>6.0.5.0
or later</td></tr>
<tr><td>CPU1 Ver1.14
CPU2 Ver1.14</td><td>Functional extension version 9
<table>
<tr><th>Additional function</th><th>Relevant items</th></tr>
<tr><td>1)Back rush compensation function</td><td>Technical reference(basic functional specifications)
5-2-1,5-2-17,6-10,7-2,
9-1-7,9-1-8
Technical reference (Modbus communication and Block peration Specification)</td></tr>
<tr><td>2)In case of 4 (=Pr6.28) absolute mode corresponding</td><td>Technical reference(basic functional specifications)
6-8,7-2
Technical reference (Modbus communication and Block operation Specification)</td></tr>
<tr><td>3)In Case of 0 (=Pr6.28) 6000h order monitor corresponding</td><td>Technical reference (Modbus communication and Block operation Specification)</td></tr>
</table></td><td>6.0.8.2
or later</td></tr>
<tr><td>CPU1 Ver1.15
CPU2 Ver1.15</td><td>Functional extension version 10
<table>
<tr><th>Additional function</th><th>Relevant items</th></tr>
<tr><td>1)Start of block operation when servo is turned on</td><td>Technical reference(basic functional specifications)
7-2,9-1-7
Technical reference (Modbus communication and Block operation Specification)
4-5,7-2,8</td></tr>
<tr><td>2)Origin detection method 3(Z phase),
4(Z phase(approximate))</td><td>Technical reference(basic functional specifications)
7-2
Technical reference (Modbus communication and Block operation Specification)
4-5,7-2</td></tr>
</table></td><td>6.0.10.0
or later</td></tr>
<tr><td>CPU1 Ver1.16
CPU2 Ver1.16</td><td>Functional extension version 11
<table>
<tr><th>Additional function</th><th>Relevant items</th></tr>
<tr><td>1)Support for homing in the absolute mode</td><td>Technical reference(basic functional specifications)
7-1,7-2,9-1-8
Technical reference (Modbus communication and Block operation Specification)
3-1,4-5,7-1,7-2,8</td></tr>
<tr><td>2)Front panel support for block parameters</td><td>Technical reference(basic functional specifications)
3-1-3,3-2-2
Technical reference (Modbus communication and Block operation Specification)
3</td></tr>
</table></td><td>6.0.10.1
or later</td></tr>
<tr><td>CPU1 Ver1.17
CPU2 Ver1.17</td><td>Functional extension version 12
<table>
<tr><th>Additional function</th><th>Relevant items</th></tr>
<tr><td>1)Software version display function</td><td>Technical reference(basic functional specifications)
3-1-3,3-2-1</td></tr>
</table></td><td>6.0.12.2
or later</td></tr>
</table>

※Host of new version and old version are interchangeable.

The parameters used in the old version can be used in the new version.

And the additional parameters of the new version is as invalid setting of default parameters, which can be interchangeable with the old version for operation.

< Relevant document >

SX-DSV02942 : Standard specifications (specifications for hardware)

SX-DSV03033 : Technical data (Modbus communication specifications・Block motion function)

<Notes>

(1)No reproduction or republication of any part or whole of this document.
(2)In order to improve the product, contents of this document (specifications, software versions, etc.) are subject to change without notice.
(3) In the MINAS-A6 series, the 2 DOF(Two-degree-of-freedom) control mode is effective, which is different from the default setting of the previous series (MINAS-A5 series, etc.). Please note that when replacing the previous series with the MINAS-A6 series, it may be necessary to readjust the parameters.
(4) This product incorporates open source software (OSS), and usage is pursuant to the terms of the license (see “7.9 License Terms for Open Source Software (OSS)”).
Your company may also have an obligation to use OSS, so please take appropriate measures at your company.

1. Introduction

On Opening the Product Package

- Make sure that the model is what you have ordered.
- Check if the product is damaged or not during transportation.
- Check if the Safety Operating Instructions are included or not.
- Check if the power connector, motor connectors, connector for external regenerative resistor connection (E-frame) and safety by-pass plug are included or not.
  (Neither the power connector nor motor connector are included to F-frame.)
  (Neither the plug of XC connentor is not in cluded to C-frame and D-frame.)
  (Safety bypass plug is not supplied with for position control type and communication type, because they do not use this plug.)

Contact to a dealer if you find any failures.

2. Driver

Check of the Model

Contents of Name Plate

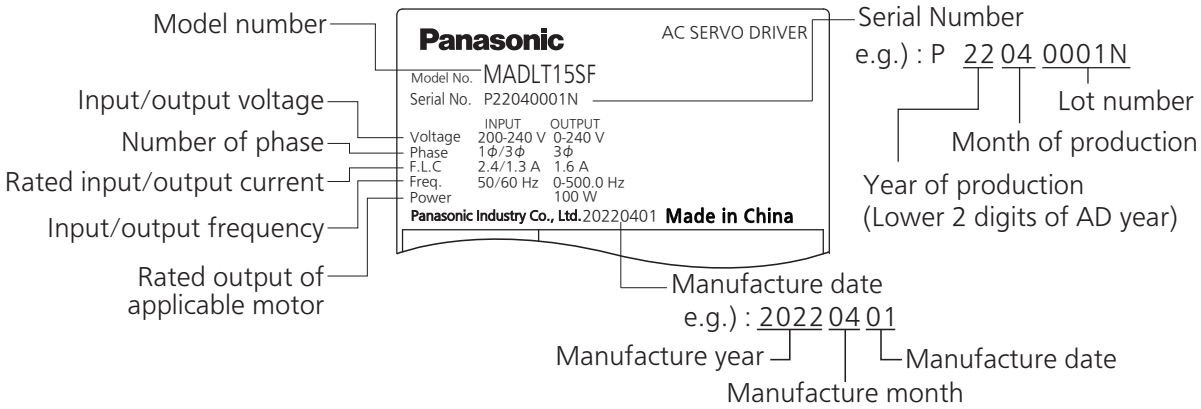

Model Designation

M A D L T 1 5 S F * * *

1~3 4 5 6 7 8 9 10~12

Frame-size symbol

Symbol	Frame
MAD	A-frame
MBD	B-frame
MCD	C-frame
MDD	D-frame
MED	E-frame
MFD	F-frame
MGD	G-frame
MHD	H-frame

Series

Symbol	Series name
L	A6 series

Safety function

Symbol	Specifications
N	No functional safety
T	Safety torque off

Special specifications (letters and numbers)

Driver specifications

■Rotary specifications

Symbol	Specifications
E	Standard type
G	Communication type
F	Multi-function type

Max. current rating of amp

Symbol	Max. current rating
0	6 A
1	8 A
2	12 A
3	22 A
4	24 A
5	40 A
8	60 A
9	80 A
A	100 A
B	120 A
C	200 A
E	300 A
F	450 A

Power supply

Symbol	Specifications
1	Single phase, 100 V
3	3-phase, 200 V
4	3-phase, 400 V
5	Single/3-phase, 200 V

Interface specifications

Symbol	Specifications
N	RTEX
S	Analog/Pulse

Related page • P.1-34 “Check of the Combination of the Driver and the Motor”

2. Driver

Parts Description

A to B-frame

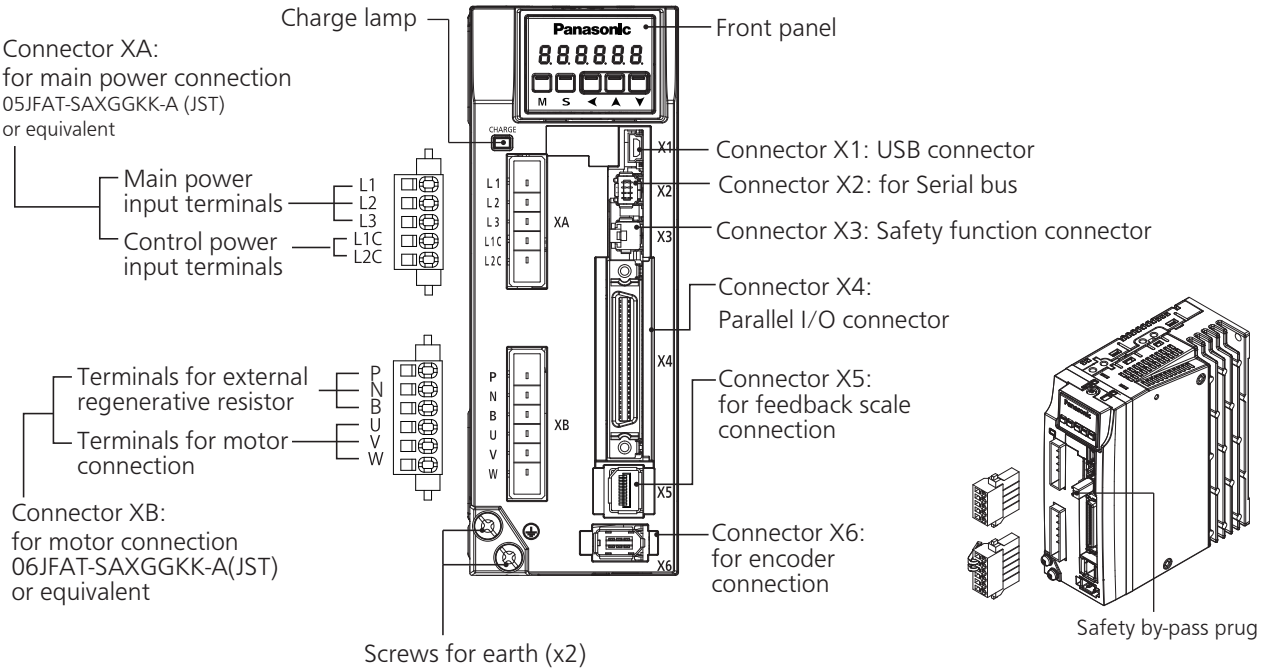

C to D-frame

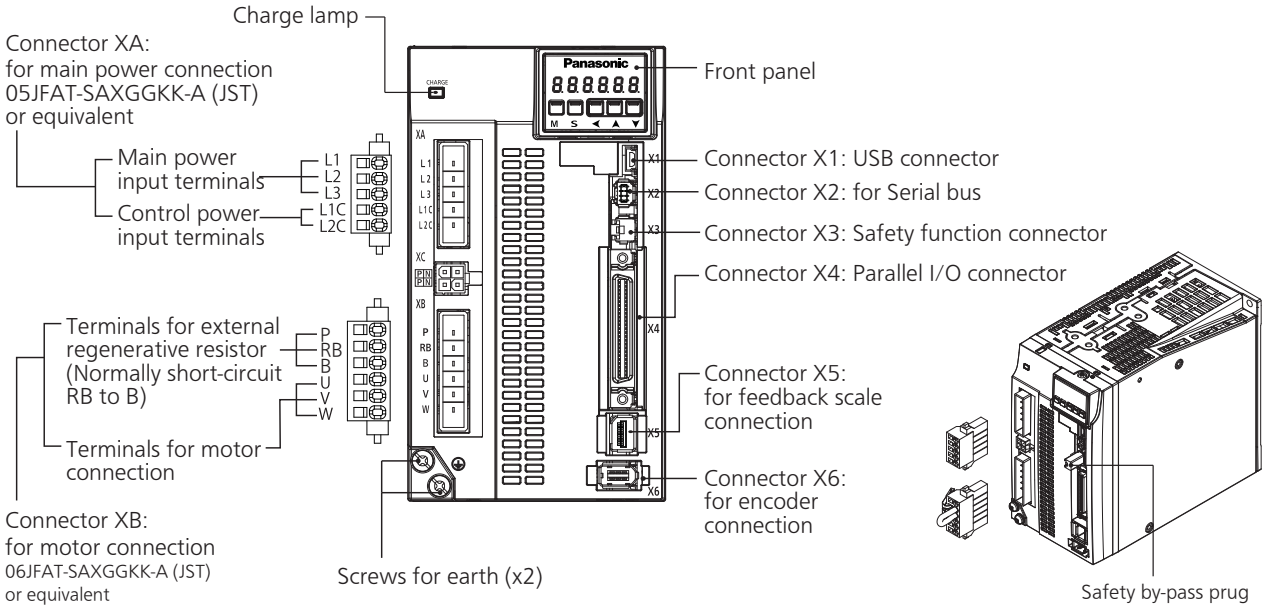

Note • Connector XA and XB are attached in A to D-frame driver.

E-frame

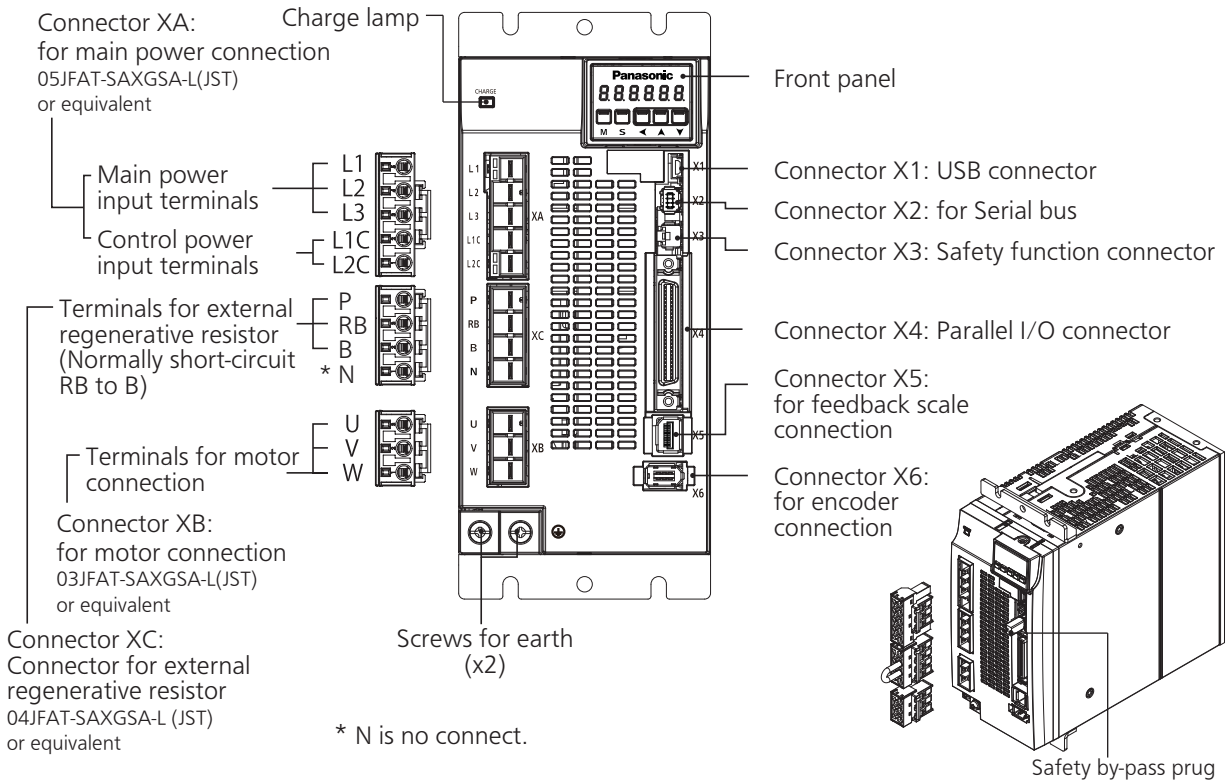

F-frame

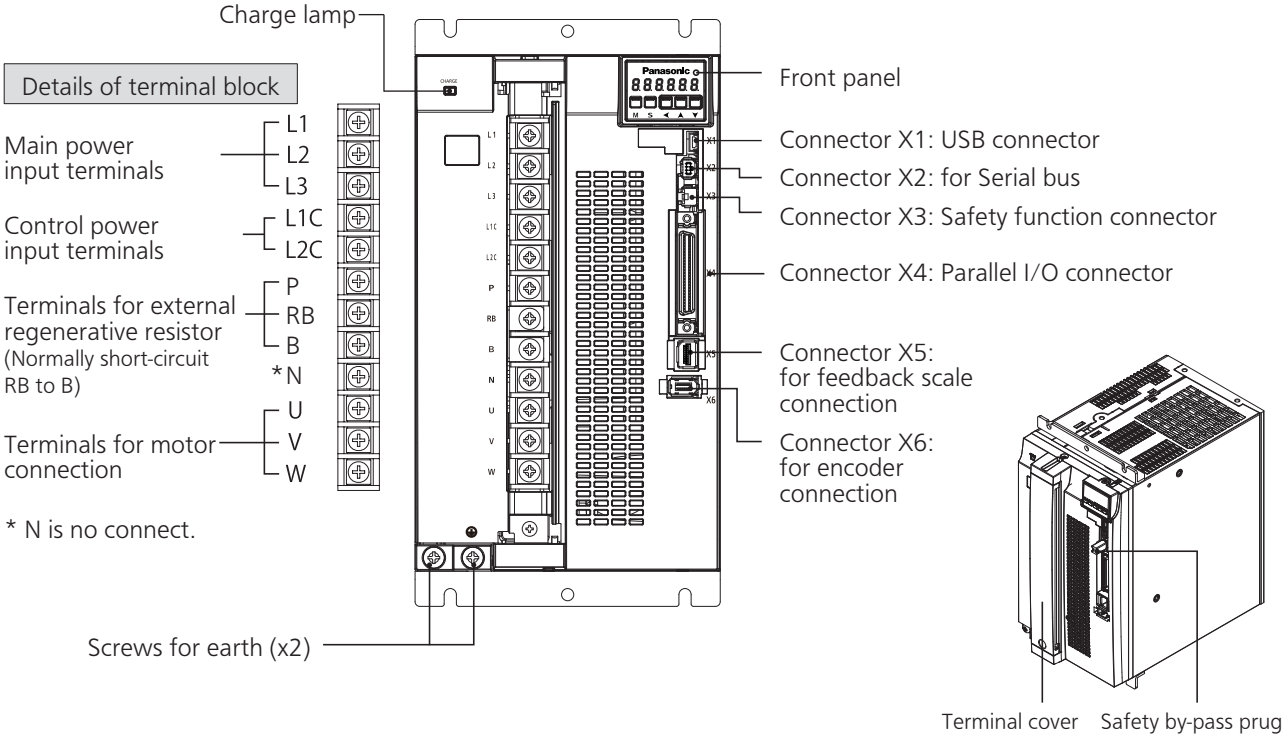

Note • Connector XA, XB and XC are attached in E-frame driver.

Related page • P.1-34 "Check of the Combination of the Driver and the Motor" • P.1-37 "Installation"
• P.2-12 "List of Peripheral Equipments for Drivers" • P.7-93 to 7-100 "Dimensions of Drivers"

G-frame

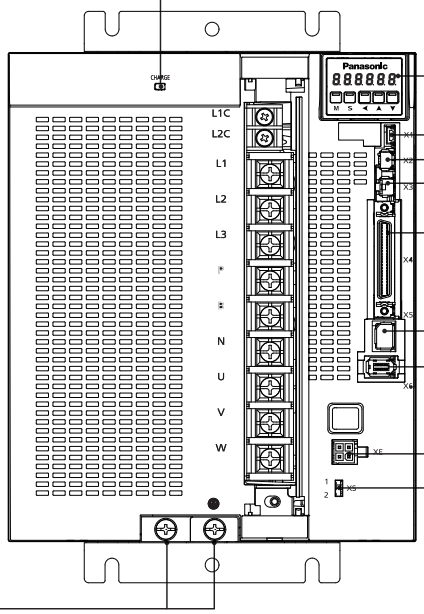

Details of terminal block

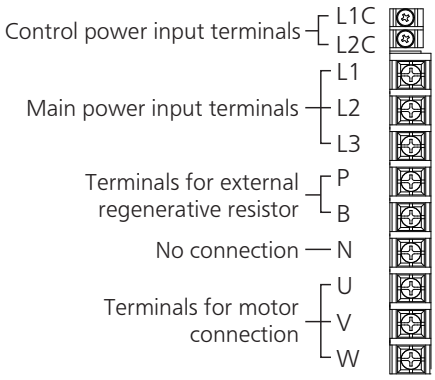

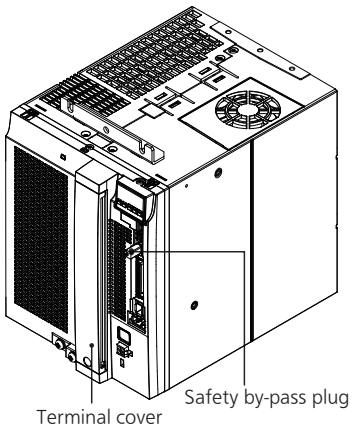

Related page
• P.1-34 "Check of the Combination of the Driver and the Motor" • P.1-37 "Installation"
• P.2-12 "List of Peripheral Equipments for Drivers" • P.7-93 to 7-100 "Dimensions of Drivers"

H-frame

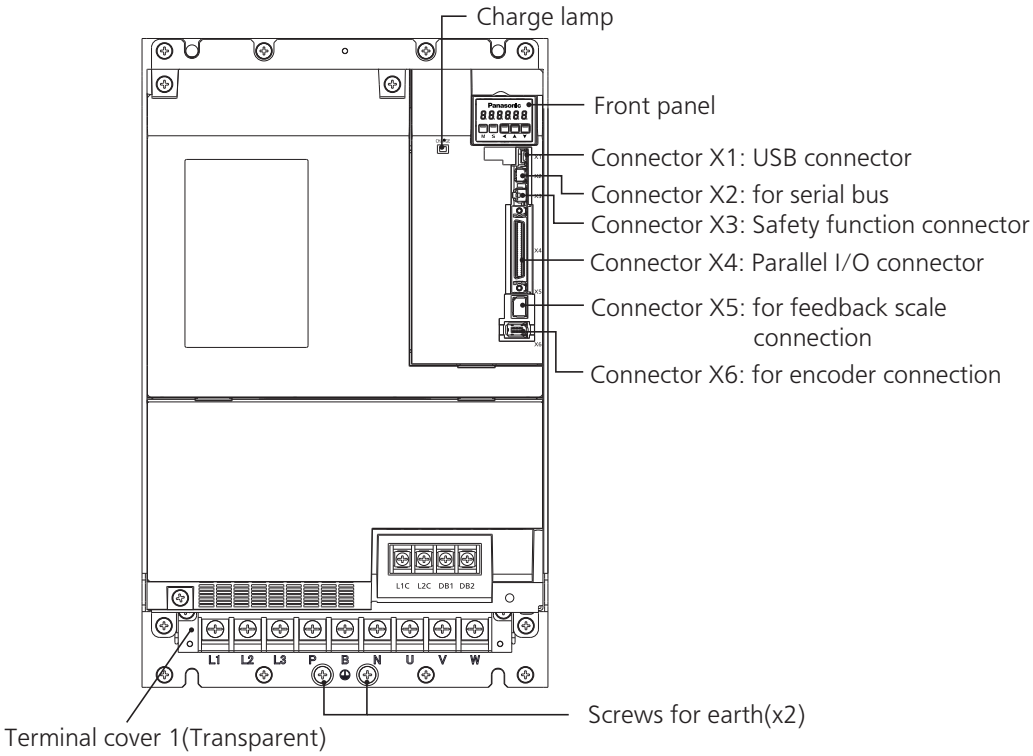

Details of terminal block

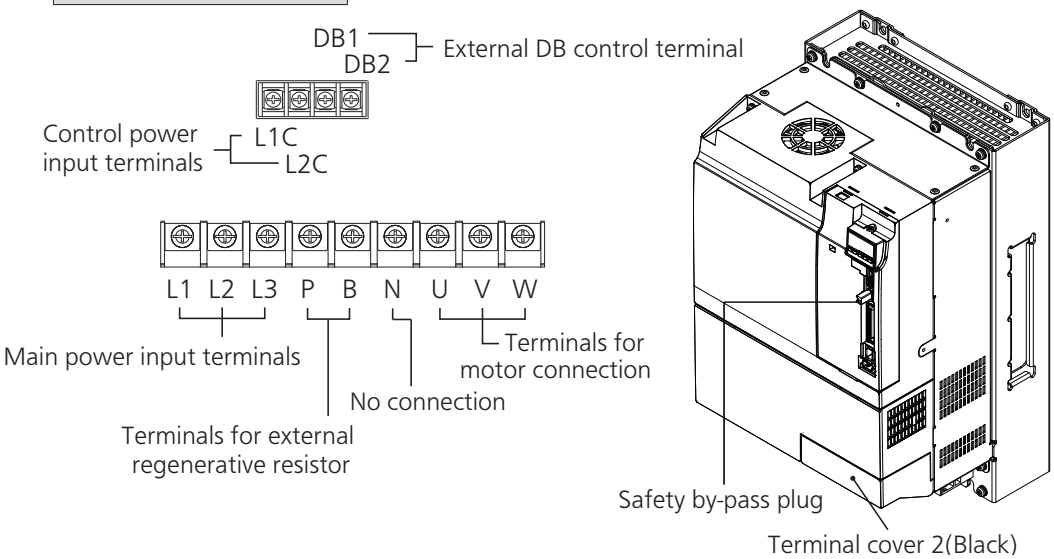

Related page
•P.1-34 "Check of the Combination of the Driver and the Motor" •P.1-37 "Installation"
•P.2-12 "List of Peripheral Equipments for Drivers" •P.7-93 to 7-100 "Dimensions of Drivers"

D-frame (400 V)

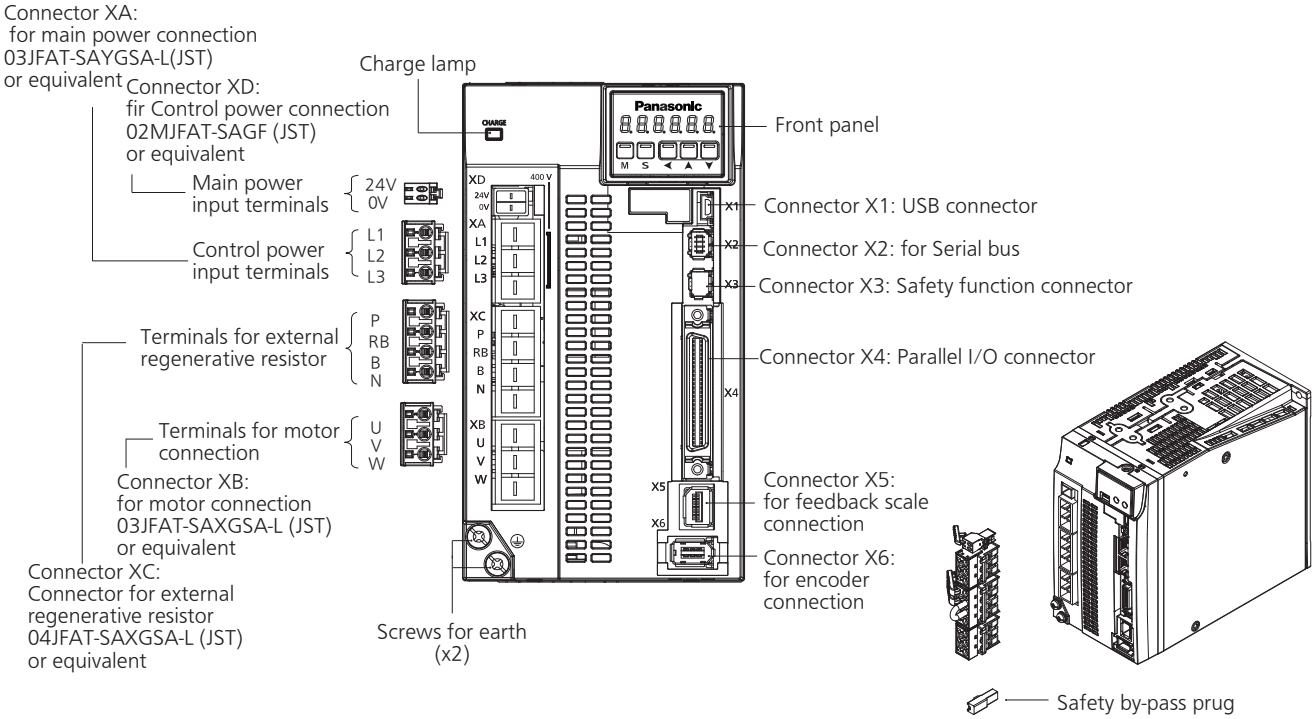

E-frame (400 V)

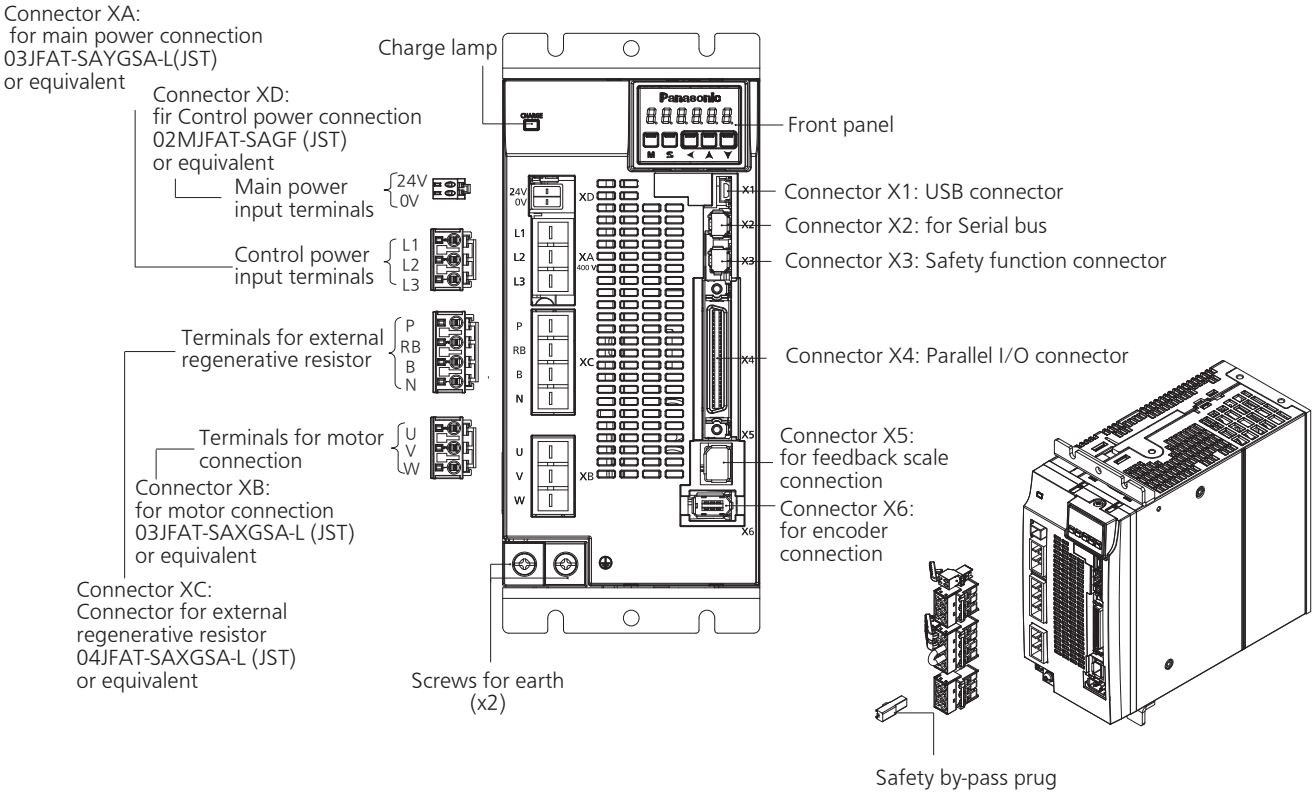

Related page
•P.1-34 "Check of the Combination of the Driver and the Motor" •P.1-37 "Installation"
•P.2-12 "List of Peripheral Equipments for Drivers" •P.7-93 to 7-100 "Dimensions of Drivers"

F-frame (400 V)

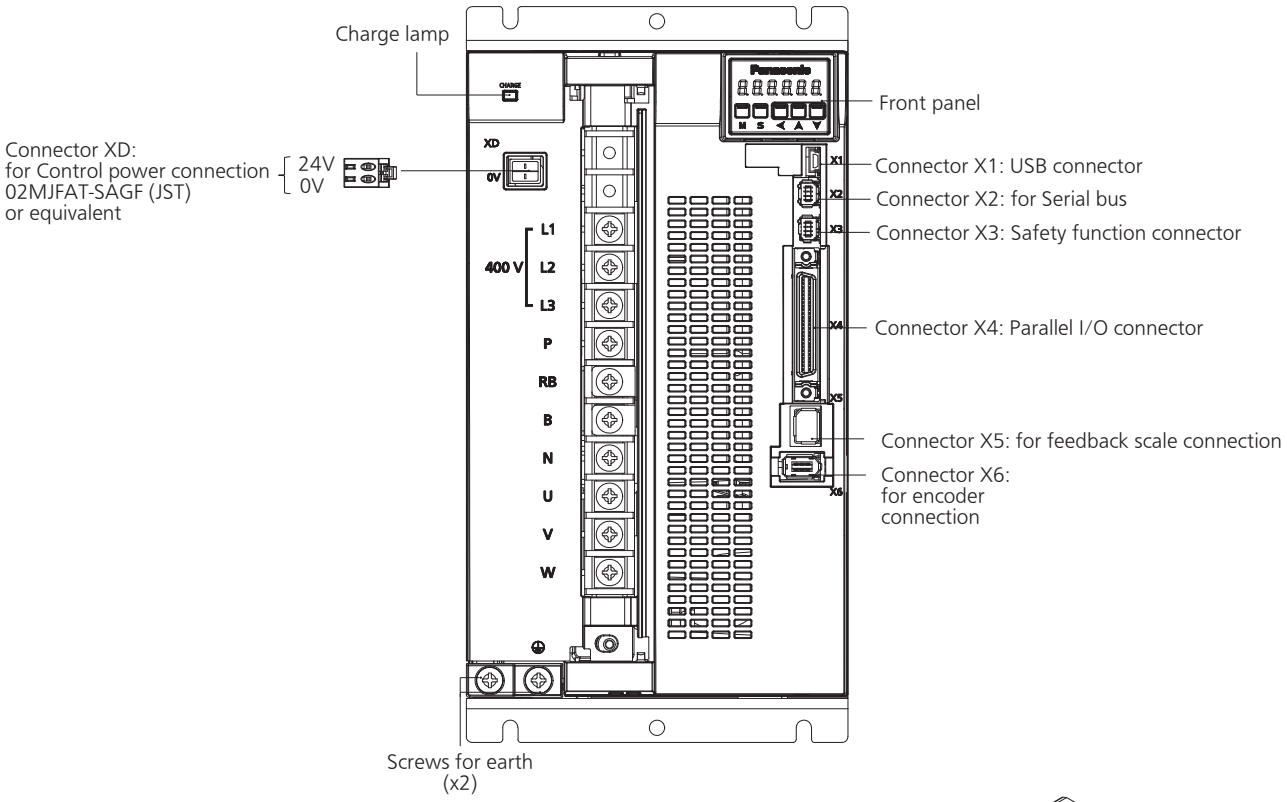

Details of terminal block

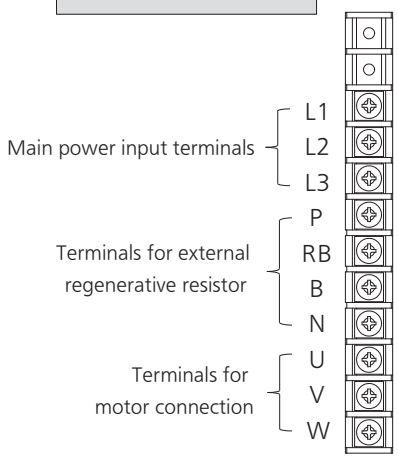

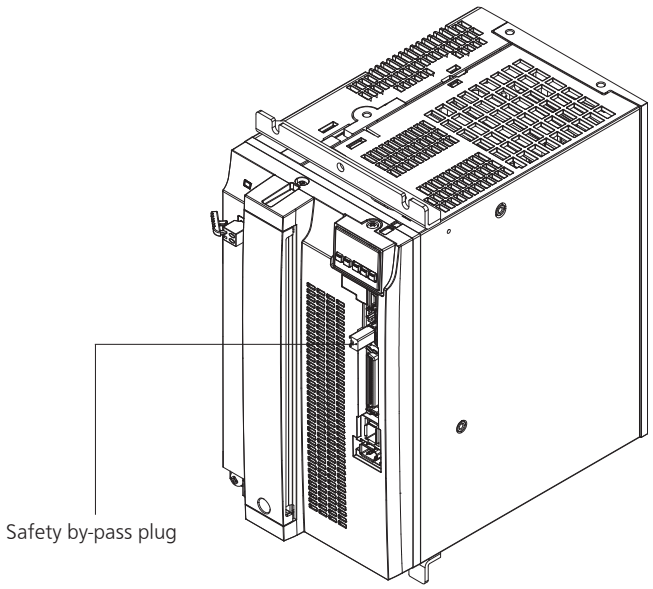

Related page
• P.1-34 "Check of the Combination of the Driver and the Motor" • P.1-37 "Installation"
• P.2-12 "List of Peripheral Equipments for Drivers" • P.7-93 to 7-100 "Dimensions of Drivers"

G-frame (400 V)

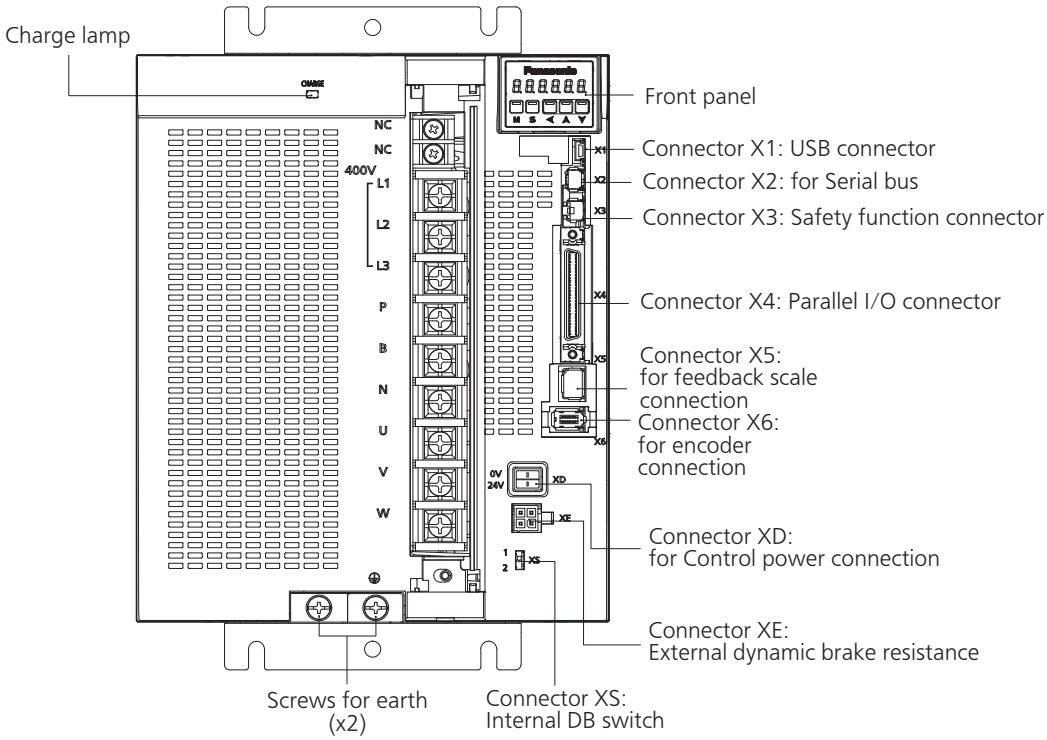

Details of terminal block

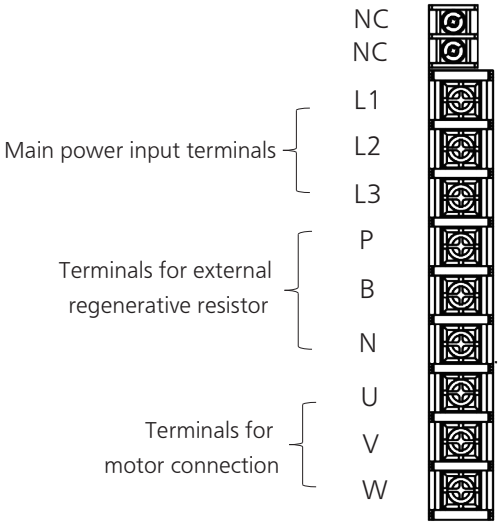

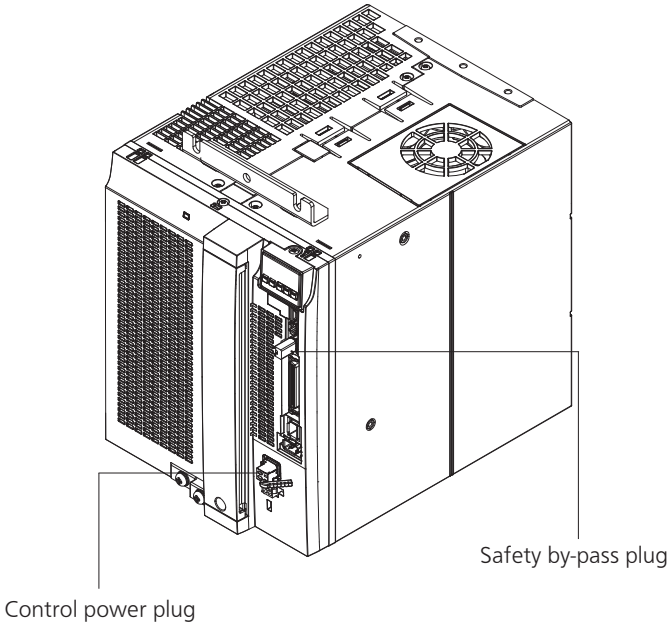

Related page
• P.1-34 "Check of the Combination of the Driver and the Motor" • P.1-37 "Installation"
• P.2-12 "List of Peripheral Equipments for Drivers" • P.7-93 to 7-100 "Dimensions of Drivers"

H-frame (400 V)

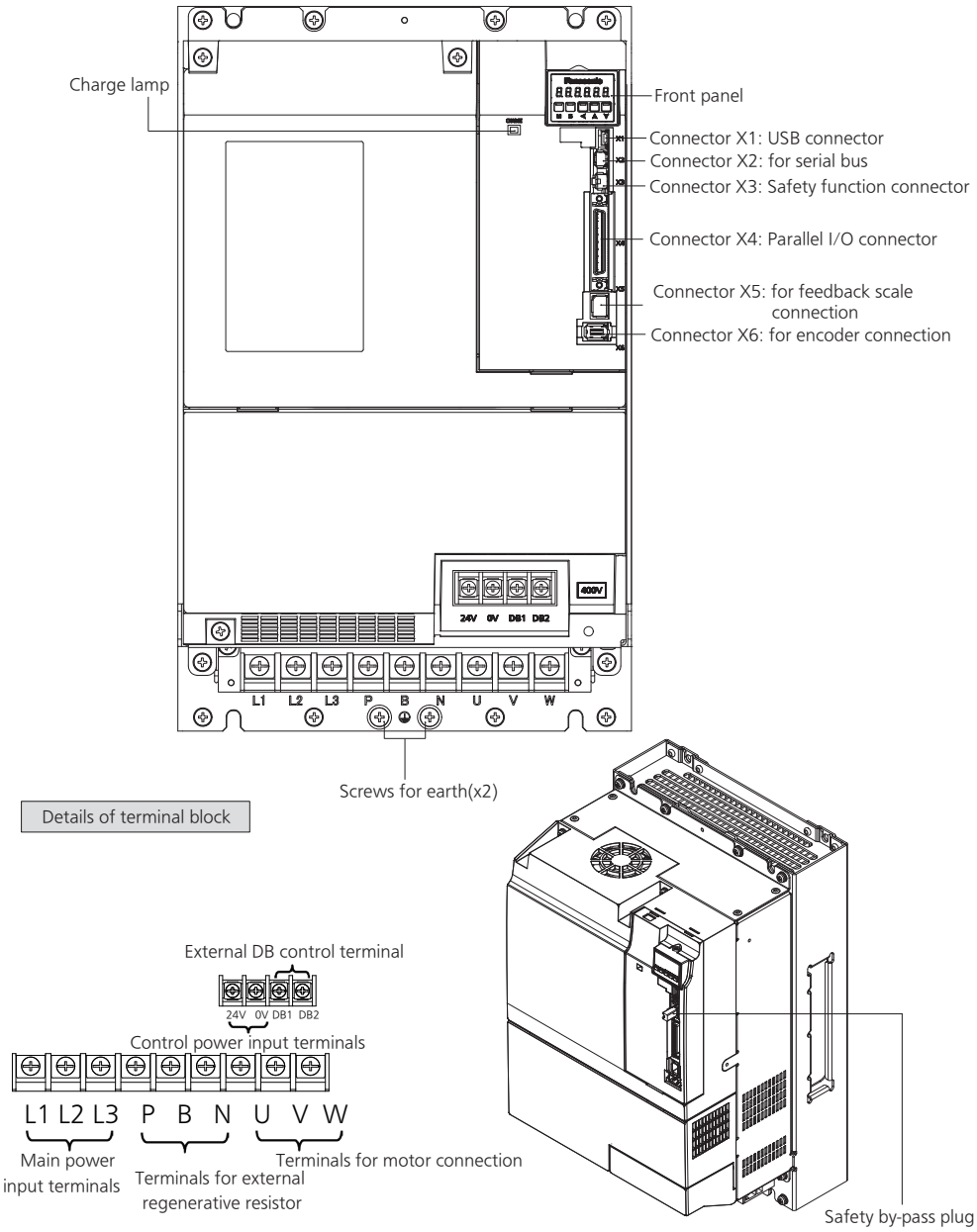

Related page
•P.1-34 "Check of the Combination of the Driver and the Motor" •P.1-37 "Installation"
•P.2-12 "List of Peripheral Equipments for Drivers" •P.7-93 to 7-100 "Dimensions of Drivers"

2. Driver

Specifications (Multi-function type)

Basic Specifications	Input power	100 V	Main circuit		Single phase, 100 V to 120 V +10 % −15 % 50 Hz/60 Hz
			Control circuit		Single phase, 100 V to 120 V +10 % −15 % 50 Hz/60 Hz
		200 V	Main circuit	A to D-frame	Single/3-phase, 200 V to 240 V +10 % −15 % 50 Hz/60 Hz
				E to H-frame	3-phase, 200 V to 240 V +10 % −15 % 50 Hz/60 Hz
			Control circuit	A to H-frame	Single phase, 200 V to 240 V +10 % −15 % 50 Hz/60 Hz
		400 V	Main circuit		3-phase, 380Y/220-480Y/277 V TN (Earth-ground neutral point) +10 % -15 % 50Hz/60 Hz
			Control circuit		DC24 V ± 15 %
	Withstand voltage				Primary to earth: withstand 1500 VAC, 1 min, (sensed current: 20 mA) [100 V/200 V] withstand 1500 VAC, 1 min, [400 V] ※Excluding the control circuit of 400 V series
	Environment		temperature		Ambient temperature: 0℃ to 55℃ (free from freezing) Storage temperature: −20 ℃ to 65 ℃ (Max. temperature guarantee: 80 ℃ for 72 hours free from condensation*1)
			humidity		Both operating and storage : 20 % to 85 %RH or less (free from condensation*1)
			Altitude		Lower than 1000 m
			Vibration		5.88 m/s² or less, 10 Hz to 60 Hz
	Control method				IGBT PWM Sinusoidal wave drive
	Encoder feedback				23-bit (8388608 resolution) absolute encoder, 7-wire serial
	Feedback scale feedback				A/B phase, initialization signal defferential input. Manufacturers that support serial communication scale(*2) Increment type Absolute type
	Parallel I/O connector	Control signal	Input		General purpose 10 inputs The function of general-purpose input is selected by parameters.
			Output		General purpose 6 outputs The function of general-purpose input is selected by parameters.
		Analog signal	Input		3 inputs (16-bit A/D : 1 input, 12-bit A/D : 2 inputs)
			Output		2 outputs (Analog monitor: 2 output) Output from I/F connector pin 42, pin 43.
		Pulse signal	Input		2 inputs (Photocoupler input, Line receiver input) Photocoupler input is compatible with both line driver I/F and open collector I/F. Line receiver input is compatible with line driver I/F.
			Output		4 outputs (Line driver: 3 output, open collector: 1 output) Feed out the encoder feedback pulse (A, B and Z-phase) or feedback scale pulse (EXA, EXB and EXZ-phase) in line driver. Z-phase and EXZ-phase pulse is also fed out in open collector. *When Block motion and full-closed control is valid, pulse signal can not be output.
	Communication function		USB		Connection with PC etc.
			RS232		1 : 1 communication to a host.
			RS485		1 : n communication to a host.
			Modbus-RTU		1 : 1 communication to a host(RS232 communication) or 1 : n communication to a host(RS485 communication).
	Safety function				Used for functional safety.
	Front panel				(1) 5 keys (2) LED (6-digit)
	Regeneration				A, B, G, H-frame: No built-in regenerative resistor (external resistor only) C to F-frame: Built-in regenerative resistor (external resistor is also enabled.)
	Dynamic brake				A to G-frame: Built-in(External resistor is also enabled of G-frame) H-frame: No built-in dynamic brake (External resistor is also enabled)
	Control mode				Switching among the following 7 mode is enabled, (1) Position control (2) Velocity control (3) Toque control (4) Position/Velocity control (5) Position/Torque control (6) Velocity/Torque control (7) Full-closed control
Function	Common	Auto tuning			The load inertia is identified in real time by the driving state of the motor operating according to the command given by the controlling device and set up support software "PANATERM". The gain is set automatically in accordance with the rigidity setting.
		Division of encoder feedback pulse			Set up of any value is enabled (encoder feedback pulses count is the max.).
		Protective function		Hard error	Over-voltage, under-voltage, over-speed, over-load, over-heat, over-current and encoder error etc.
				Soft error	Excess position deviation, command pulse division error, EEPROM error etc.
		Traceability of alarm data			The alarm data history can be referred to.
		Infinite rotation absolute function			Available
		Deterioration diagnosis waring function			Available

Caution *1 Air containing water vapor will become saturated with water vapor as the temperature falls,causing dew.

*2 Please refer to the latest macker in our HP.

Related page • P.1-37 "Installation of Driver" • P.1-41 "Installation of Motor"

Function	Position control	Control input		Deviation counter clear, command pulse input inhibition, command division/multiplication switching, vibration suppression control switching, etc.
		Control output		Positioning complete, etc.
		Pulse input	Max. command pulse frequency	Exclusive interface for Photocoupler and line driver: 500 kpulse/s Exclusive interface for line receiver: 8 Mpulse/s
			Input pulse signal format	Differential input. Selectable with parameter. ((1) Positive and Negative direction, (2) A and B-phase, (3) Command and direction)
			Electronic gear (Division/Multiplication of command pulse)	Process command pulse frequency × electronic gear ratio $\left(\frac{1 \text{ to } 2^{30}}{1 \text{ to } 2^{30}}\right)$ as positional command input. Use electronic gear ratio in the range 1/1000 times to 8000 times.
			Smoothing filter	Primary delay filter or FIR type filter is adaptable to the command input
		Analog input	Torque limit command input	Individual torque limit for both positive and negative direction is enabled.
			Torque feed forward input	Analog voltage can be used as torque feed forward input.
		Vibration suppression control		Maximum of 3 may be used simultaneously
		Model-type damping filter		Maximum of 2 may be used simultaneously
		Two-degree-of-freedom control system		Available
		Load variation suppression function		Available
		Position compare output function		Available [Condition] Block operation valid setting Return to origin completed state in increment mode (when block operation origin return invalidation setting is set to invalid)
		External scale position information monitor function under semi-closed control		Available
		Block operation		Available*1
	Velocity control	Control input		Internal command velocity selection 1, Internal command velocity selection 2, Internal command velocity selection 3, speed zero clamp, etc.
		Control output		Speed arrival, etc.
		Analog input	Velocity command input	Speed command input can be provided by means of analog voltage. Parameters are used for scale setting and command polarity. (6 V/Rated rotational speed Default)
			Torque limit command input	Torque limit can be applied to each direction respectively.
			Torque feed forward input	Analog voltage can be used as torque feed forward input.
		Internal velocity command		Switching the internal 8speed is enabled by command input.
		Soft-start/down function		0 to 10s/1000 r/min r/min Setting is possible for acceleration and deceleration respectively. S shaped acceleration/deceleration is possible.
		Zero-speed clamp		Internal velocity command can be clamped to 0 with speed zero clamp input.
		Velocity command filter		Available
		Two-degree-of-freedom control system		Available
		Load variation suppression function		Available
		Position compare output function		Unavailable
		External scale position information monitor function under semi-closed control		Available
		Block operation		Unavailable

Caution For details of block operation functions, please refer to Technical reference (Modbus communication and Block operation Specification).

Function	Torque control	Control input		Speed zero clamp, torque command sign input, etc.
		Control output		Speed arrival, etc.
		Analog input	Torque command input	Torque command input can be provided by means of analog voltage. Parameters are used for scale setting and command polarity. (6 V/rated torque Default)
		Speed limit function		Speed limit value with parameter t is enabled.
		Two-degree-of-freedom control system		Unavailable
		Load variation suppression function		Unavailable
		Position compare output function		Unavailable
		External scale position information monitor function under semi-closed control		Available
		Block operation		Unavailable
	Full-closed control	Control input		Deviation counter clear, command pulse input inhibition, command division/multiplication switching, vibration suppression control switching, etc.
		Control output		Positioning complete, etc.
		Pulse input	Max. command pulse frequency	Exclusive interface for Photocoupler and line driver: 500 kpulse/s Exclusive interface for line receiver: 8 Mpulse/s
			Input pulse signal format	Differential input. Selectable with parameter. ((1) Positive and Negative direction, (2) A and B-phase, (3) Command and direction)
			Electronic gear (Division/Multiplication of command pulse)	Process command pulse frequency × electronic gear ratio $\left(\frac{1 \text{ to } 2^{30}}{1 \text{ to } 2^{30}}\right)$ as positional command input. Use electronic gear ratio in the range 1/1000 times to 8000 times.
			Smoothing filter	Primary delay filter or FIR type filter is adaptable to the command input
		Analog input	Torque limit command input	Individual torque limit for both positive and negative direction is enabled.
		Setup range of division/multiplication of feedback scale		1/40 times to 1280 times The ratio of encoder pulse (numerator) to external scale pulse (denominator) can be set to 1 to 2^{23} (numerator) to 1 to 2^{23} (denominator), but should be set to a ratio within the range shown above.
		Vibration suppression control		Maximum of 2 may be used simultaneously
		Model damping filter		Unavailable
		Two-degree-of-freedom control system		Available
		Load variation suppression function		Unavailable
		Position compare output function		Available [Condition] Block operation valid setting Return to origin completed state in case of increment mode (block operation return to origin invalid setting set to invalid)
		External scale position information monitor function under semi-closed control		Unavailable
		Block operation		Available

Caution For details of block operation functions, please refer to Technical reference (Modbus communication and Block operation Specification).

2. Driver

Specifications (Communication type)

Basic Specifications	Input power	100 V	Main circuit		Single phase, 100 V to 120 V +10 % −15 % 50 Hz/60 Hz
			Control circuit		Single phase, 100 V to 120 V +10 % −15 % 50 Hz/60 Hz
		200 V	Main circuit	A to D-frame	Single/3-phase, 200 V to 240 V +10 % −15 % 50 Hz/60 Hz
				E to F-frame	3-phase, 200 V to 240 V +10 % −15 % 50 Hz/60 Hz
			Control circuit	A to F-frame	Single phase, 200 V to 240 V +10 % −15 % 50 Hz/60 Hz
		400 V	Main circuit		3-phase, 380Y/220-480Y/277 V TN (Earth-ground neutral point) +10 % −15 % 50Hz/60 Hz
			Control circuit		DC24 V ± 15 %
	Withstand voltage				Primary to earth: withstand 1500 VAC, 1 min, (sensed current: 20 mA) [100 V/200 V] withstand 1500 VAC, 1 min, [400 V] ※Excluding the control circuit of 400 V series
	Environment		temperature		Ambient temperature: 0℃ to 55℃ (free from freezing) Storage temperature: −20℃ to 65℃ (Max. temperature guarantee: 80 ℃ for 72 hours free from condensation*1)
			humidity		Both operating and storage : 20 % to 85 %RH or less (free from condensation)
			Altitude		Lower than 1000 m
			Vibration		5.88 m/s² or less, 10 Hz to 60 Hz (No continuous use at resonance frequency)
	Control method				IGBT PWM Sinusoidal wave drive
	Encoder feedback				23-bit (8388608 resolution) absolute encoder, 7-wire serial
	Parallel I/O connector	Control signal	Input		General purpose 10 inputs The function of general-purpose input is selected by parameters.
			Output		General purpose 6 outputs The function of general-purpose input is selected by parameters.
		Analog signal	Output		2 outputs (Analog monitor: 2 output) Output from I/F connector pin 42, pin 43.
		Pulse signal	Input		2 inputs (Photocoupler input, Line receiver input) Photocoupler input is compatible with both line driver I/F and open collector I/F. Line receiver input is compatible with line driver I/F.
			Output		4 outputs (Line driver: 3 output, open collector: 1 output) Feed out the encoder feedback pulse (A, B and Z-phase) in line driver. Z-phase is also fed out in open collector.
	Communication function		USB		Connection with PC etc.
			RS232		1 : 1 communication to a host.
			RS485		1 : n communication to a host.
			Modbus-RTU		1 : 1 communication to a host(RS232 communication) or 1 : n communication to a host(RS485 communication).
	Front panel				(1) 5 keys (2) LED (6-digit)
	Regeneration				A, B-frame: No built-in regenerative resistor (external resistor only) C to F-frame: Built-in regenerative resistor (external resistor is also enabled.)
	Dynamic brake				A to F-frame: Built-in
	Control mode				(1) Position control (2) Internal velocity control (3) Position/ Internal velocity control
Funtion	Common	Auto tuning			The load inertia is identified in real time by the driving state of the motor operating according to the command given by the controlling device and set up support software "PANATERM". The gain is set automatically in accordance with the rigidity setting.
		Division of encoder feedback pulse			Set up of any value is enabled (encoder pulses count is the max.).

Caution *1 Air containing water vapor will become saturated with water vapor as the temperature falls, causing dew.

Related page • P.1-37 "Installation of Driver" • P.1-41 "Installation of Motor"

Funtion	Common	Protective function	Hard error	Over-voltage, under-voltage, over-speed, over-load, over-heat, over-current and encoder error etc.
			Soft error	Excess position deviation, command pulse division error, EEPROM error etc.
		Traceability of alarm data		The alarm data history can be referred to.
		Infinite rotation absolute function		Available
		Deterioration diagnosis waring function		Available
	Position control	Control input		Deviation counter clear, command pulse input inhibition, command division/ multiplication switching, vibration suppression control switching, etc.
		Control output		Positioning complete, etc.
		Pulse input	Max. command pulse frequency	Exclusive interface for Photocoupler and line driver: 500 kpulse/s Exclusive interface for line receiver: 8 Mpulse/s
			Input pulse signal format	Differential input ((1) Positive and Negative direction, (2) A and B-phase, (3) Command and direction)
			Electronic gear (Division/ Multiplication of command pulse)	Process command pulse frequency × electronic gear ratio $\left(\frac{1 \text{ to } 2^{30}}{1 \text{ to } 2^{30}}\right)$ as positional command input. Use electronic gear ratio in the range 1/1000 times to 8000 times.
			Smoothing filter	Primary delay filter or FIR type filter is adaptable to the command input
		Vibration suppression control		Maximum of 3 may be used simultaneously
		Model-type damping filter		Maximum of 2 may be used simultaneously
		Two-degree-of-freedom control system		Available
		Load variation suppression function		Available
		Position compare output function		Available [Condition] Block operation valid setting Return to origin completed state in increment mode (when block operation origin return invalidation setting is set to invalid)
		External scale position information monitor function under semi-closed control		Unavailable
		Block operation		Available
	Internal velocity control	Control input		(1) Selection of internal velocity setup (2) Speed zero clamp, etc.
		Control output		Speed arrival, etc.
		Internal velocity command		Switching the internal 8speed is enabled by command input.
		Soft-start/down function		Individual setup of acceleration and deceleration is enabled, with 0 s/1000 r/min to 10 s/1000 r/min. Sigmoid acceleration/deceleration is also enabled.
		Zero-speed clamp		0-clamp of internal velocity command with speed zero clamp input is enabled.
		Two-degree-of-freedom control system		Available
		Load variation suppression function		Available
		Position compare output function		Available [Condition] Block operation valid setting Return to origin completed state in increment mode (when block operation origin return invalidation setting is set to invalid)
		External scale position information monitor function under semi-closed control		Unavailable
		Block operation		Available

Caution For details of block operation functions, please refer to Technical reference (Modbus communication and Block operation Specification).

2. Driver

Specifications (Position control type)

Basic Specifications	Input power	100 V	Main circuit		Single phase, 100 V to 120 V +10 % −15 % 50 Hz/60 Hz
			Control circuit		Single phase, 100 V to 120 V +10 % −15 % 50 Hz/60 Hz
		200 V	Main circuit	A to D-frame	Single/3-phase, 200 V to 240 V +10 % −15 % 50 Hz/60 Hz
				E to F-frame	3-phase, 200 V to 240 V +10 % −15 % 50 Hz/60 Hz
			Control circuit	A to F-frame	Single phase, 200 V to 240 V +10 % −15 % 50 Hz/60 Hz
		400 V	Main circuit		3-phase, 380Y/220-480Y/277 V TN (Earth-ground neutral point) +10 % −15 % 50Hz/60 Hz
			Control circuit		DC24 V ± 15 %
	Withstand voltage				Primary to earth: withstand 1500 VAC, 1 min, (sensed current: 20 mA) [100 V/200 V] withstand 1500 VAC, 1 min, [400 V] ※Excluding the control circuit of 400 V series
	Environment		temperature		Ambient temperature: 0℃ to 55℃ (free from freezing) Storage temperature: −20℃ to 65℃ (Max. temperature guarantee: 80 ℃ for 72 hours free from condensation*1)
			humidity		Both operating and storage : 20 % to 85 %RH or less (free from condensation)
			Altitude		Lower than 1000 m
			Vibration		5.88 m/s² or less, 10 Hz to 60 Hz (No continuous use at resonance frequency)
	Control method				IGBT PWM Sinusoidal wave drive
	Encoder feedback				23-bit (8388608 resolution) absolute encoder, 7-wire serial
	Parallel I/O connector	Control signal		Input	General purpose 10 inputs The function of general-purpose input is selected by parameters.
				Output	General purpose 6 outputs The function of general-purpose input is selected by parameters.
		Analog signal		Output	2 outputs (Analog monitor: 2 output) Output from I/F connector pin 42, pin 43.
		Pulse signal		Input	2 inputs (Photocoupler input, Line receiver input) Photocoupler input is compatible with both line driver I/F and open collector I/F. Line receiver input is compatible with line driver I/F.
				Output	4 outputs (Line driver: 3 output, open collector: 1 output) Feed out the encoder feedback pulse (A, B and Z-phase) or feedback scale pulse (EXA, EXB and EXZ-phase) in line driver. Z-phase and EXZ-phase pulse is also fed out in open collector.
	Communication function			USB	Connection with PC etc.
	Front panel				(1) 5 keys (2) LED (6-digit)
	Regeneration				A, B-frame: No built-in regenerative resistor (external resistor only) C to F-frame: Built-in regenerative resistor (external resistor is also enabled.)
	Dynamic brake				A to F-frame: Built-in
	Control mode				(1) Position control (2) Internal velocity control (3) Position/ Internal velocity control
Funtion	Common	Auto tuning			The load inertia is identified in real time by the driving state of the motor operating according to the command given by the controlling device and set up support software "PANATERM". The gain is set automatically in accordance with the rigidity setting.
		Division of encoder feedback pulse			Set up of any value is enabled (encoder pulses count is the max.).

Caution *1 Air containing water vapor will become saturated with water vapor as the temperature falls, causing dew.

Related page • P.1-37 "Installation of Driver" • P.1-41 "Installation of Motor"

Function	Common	Protective function	Hard error	Over-voltage, under-voltage, over-speed, over-load, over-heat, over-current and encoder error etc.
			Soft error	Excess position deviation, command pulse division error, EEPROM error etc.
		Traceability of alarm data		The alarm data history can be referred to.
		Infinite rotation absolute function		Available
		Deterioration diagnosis waring function		Available
	Position control	Control input		Deviation counter clear, command pulse input inhibition, command division/multiplication switching, vibration suppression control switching, etc.
		Control output		Positioning complete, etc.
		Pulse input	Max. command pulse frequency	Exclusive interface for Photocoupler and line driver: 500 kpulse/s Exclusive interface for line receiver: 8 Mpulse/s
			Input pulse signal format	Differential input ((1) Positive and Negative direction, (2) A and B-phase, (3) Command and direction)
			Electronic gear (Division/Multiplication of command pulse)	Process command pulse frequency × electronic gear ratio $\left(\frac{1 \text{ to } 2^{30}}{1 \text{ to } 2^{30}}\right)$ as positional command input. Use electronic gear ratio in the range 1/1000 times to 8000 times.
			Smoothing filter	Primary delay filter or FIR type filter is adaptable to the command input
		Vibration suppression control		Maximum of 3 may be used simultaneously
		Model-type damping filter		Maximum of 2 may be used simultaneously
		Two-degree-of-freedom control system		Available
		Load variation suppression function		Available
		Position compare output function		Available [Condition] Block operation valid setting Return to origin completed state in increment mode (when block operation origin return invalidation setting is set to invalid)
		External scale position information monitor function under semi-closed control		Unavailable
		Block operation		Available
	Internal velocity control	Control input		(1) Selection of internal velocity setup (2) Speed zero clamp, etc.
		Control output		Speed arrival, etc.
		Internal velocity command		Switching the internal 8speed is enabled by command input.
		Soft-start/down function		Individual setup of acceleration and deceleration is enabled, with 0 s/1000 r/min to 10 s/1000 r/min. Sigmoid acceleration/deceleration is also enabled.
		Zero-speed clamp		0-clamp of internal velocity command with speed zero clamp input is enabled.
		Two-degree-of-freedom control system		Available
		Load variation suppression function		Available
		Position compare output function		Available [Condition] Block operation valid setting Return to origin completed state in increment mode (when block operation origin return invalidation setting is set to invalid)
		External scale position information monitor function under semi-closed control		Unavailable
		Block operation		Available

Caution For details of block operation functions, please refer to Technical reference (Modbus communication and Block operation Specification).

2. Driver

Block Diagram

A, B-frame (100 V/200 V)

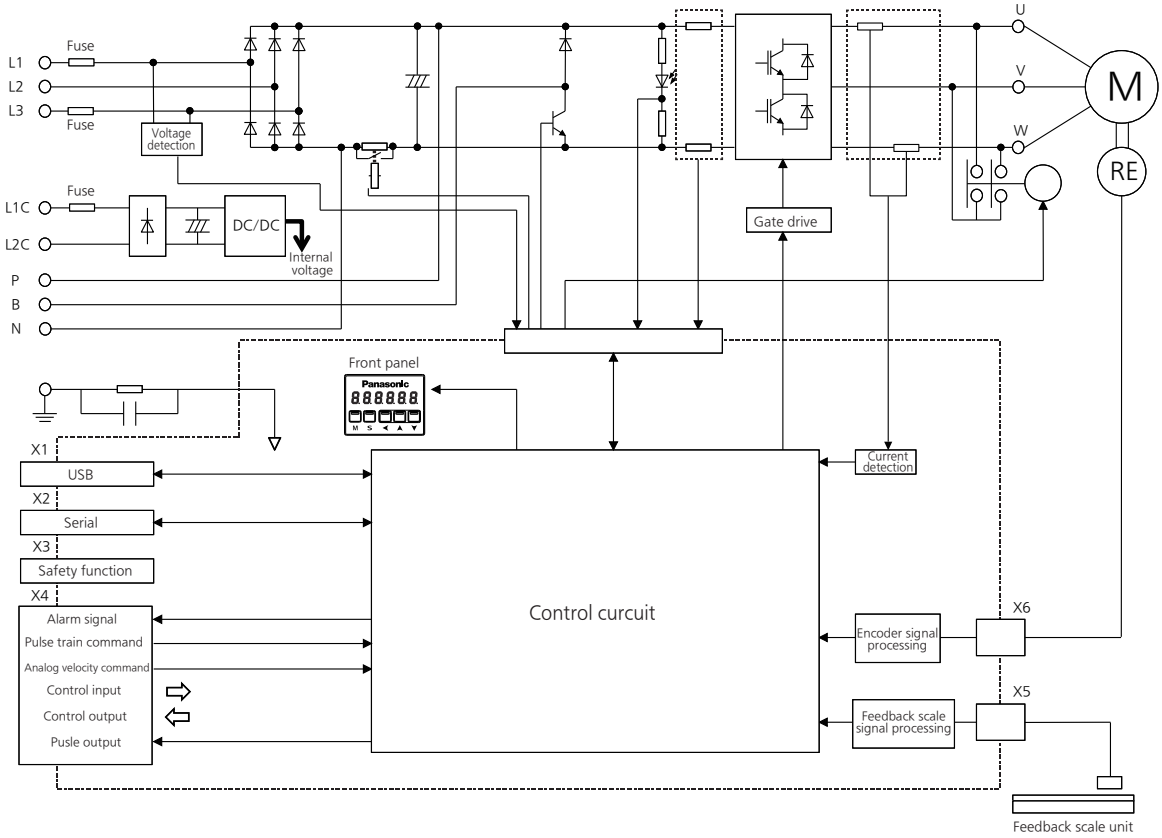

C, D-frame (100 V/200 V)

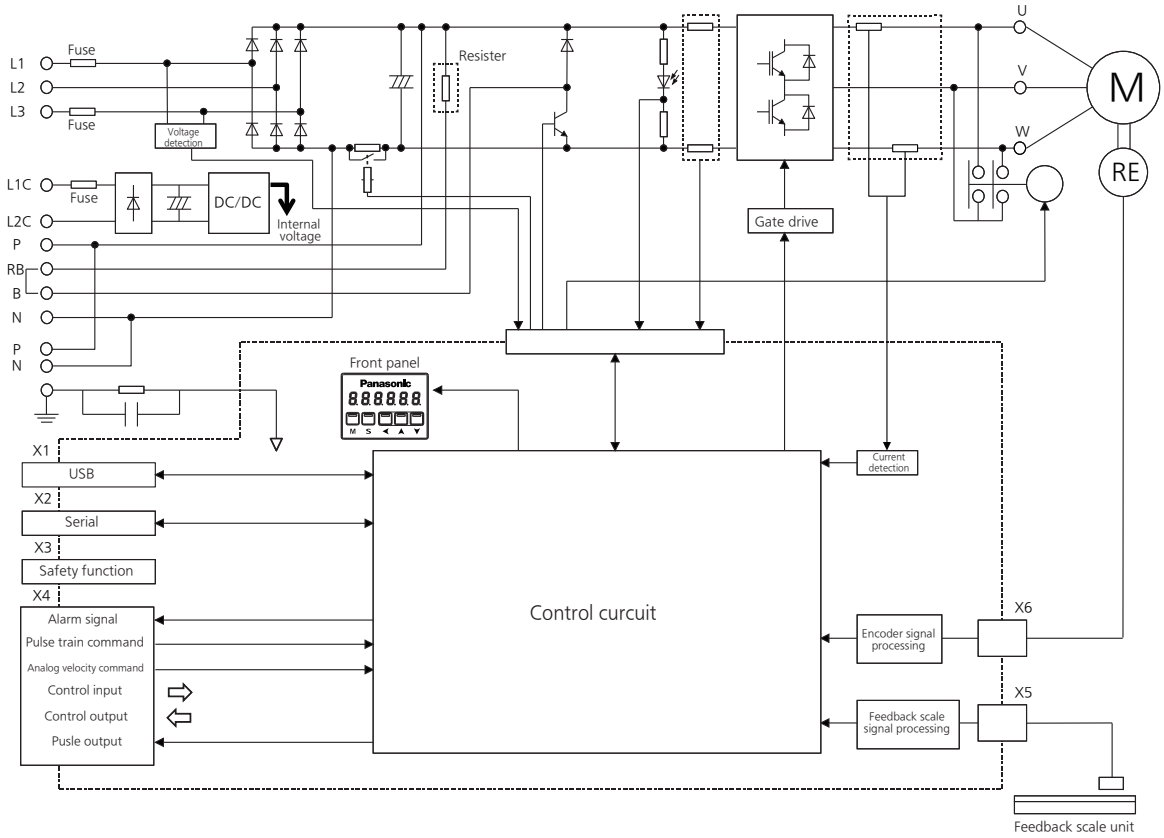

E-frame (200 V)

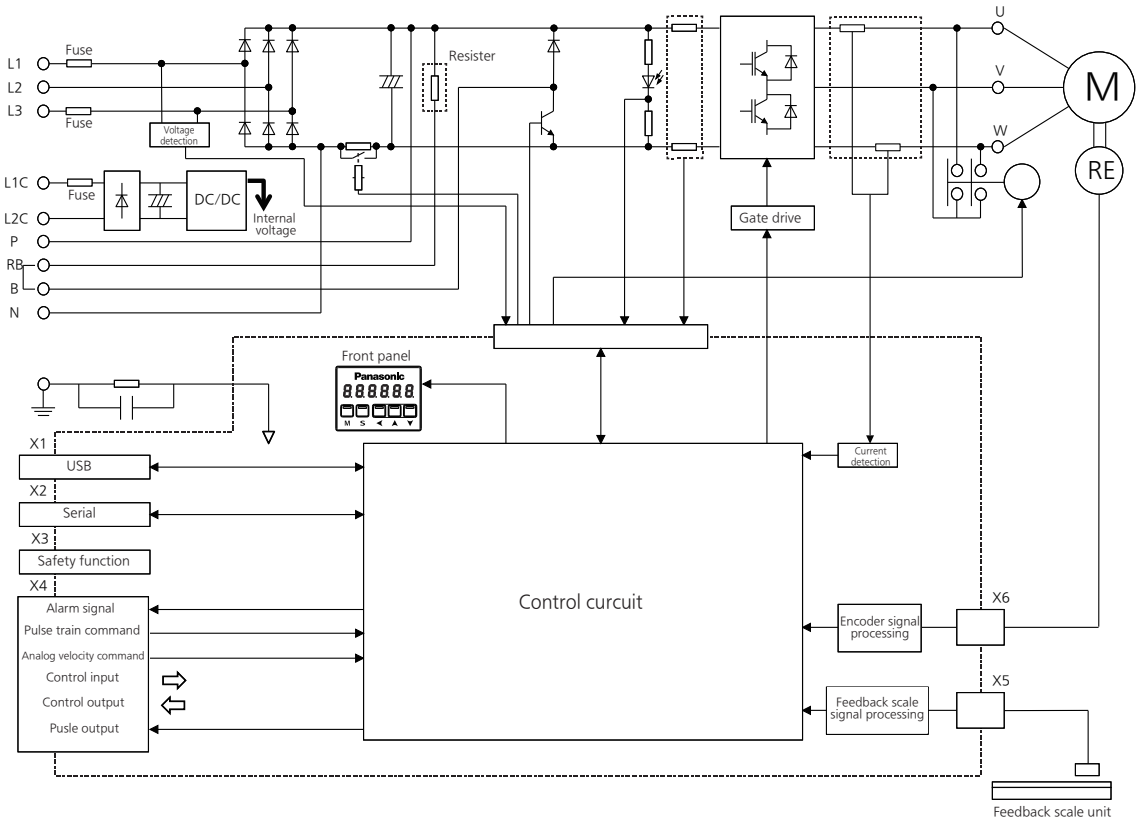

F-frame (200 V)

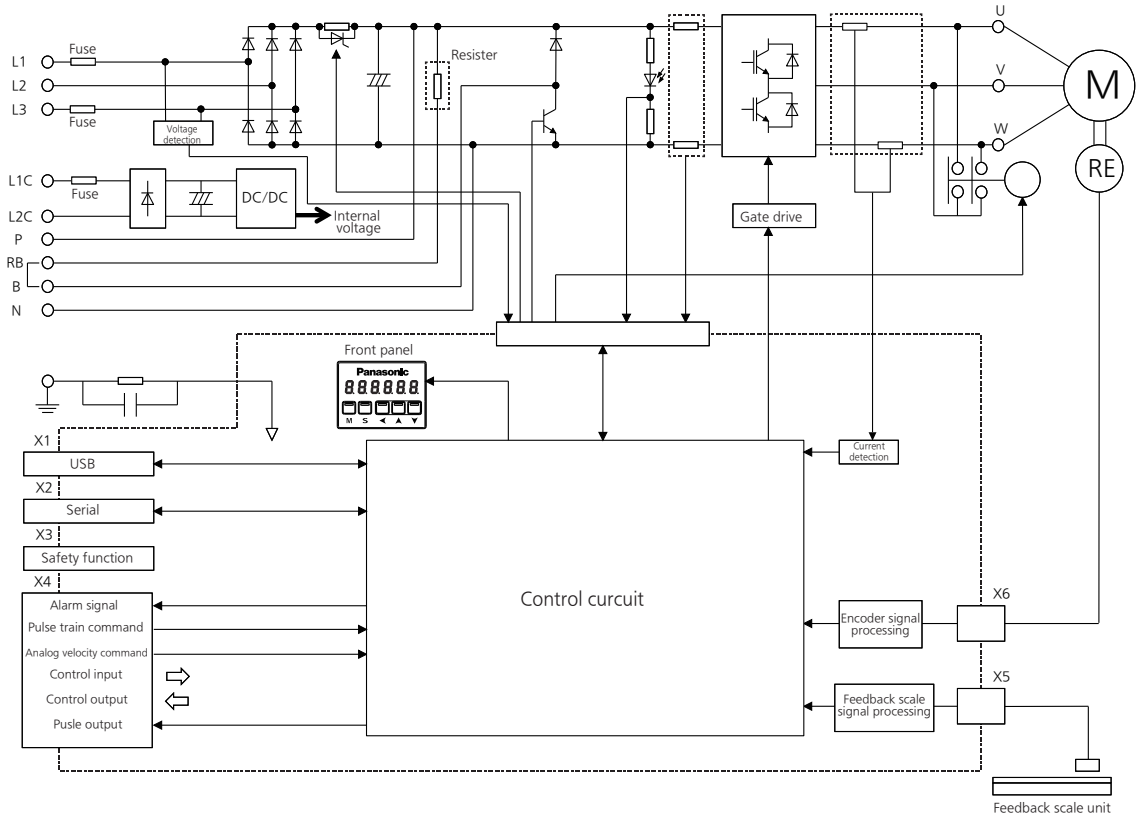

G-frame (200 V)

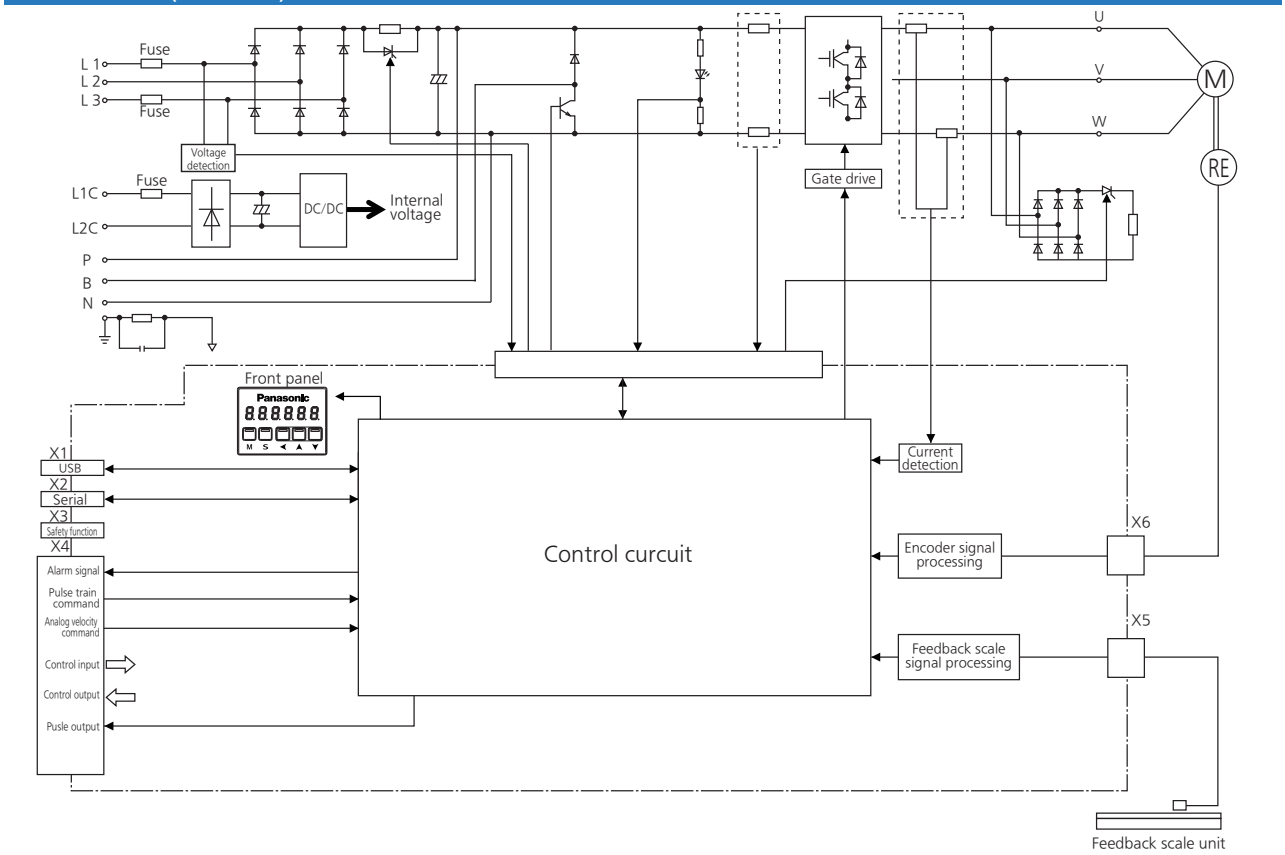

H-frame (200 V)

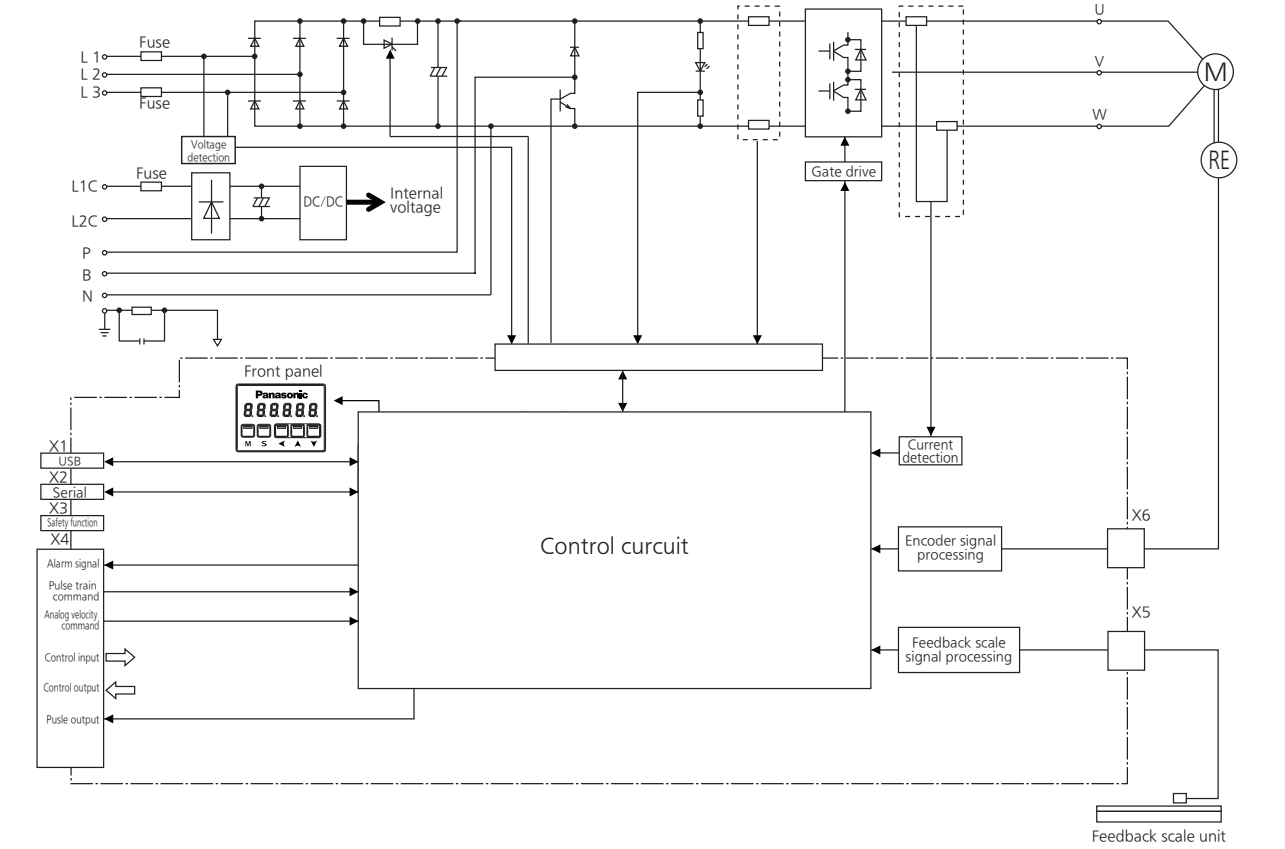

D,E,F-frame (400 V)

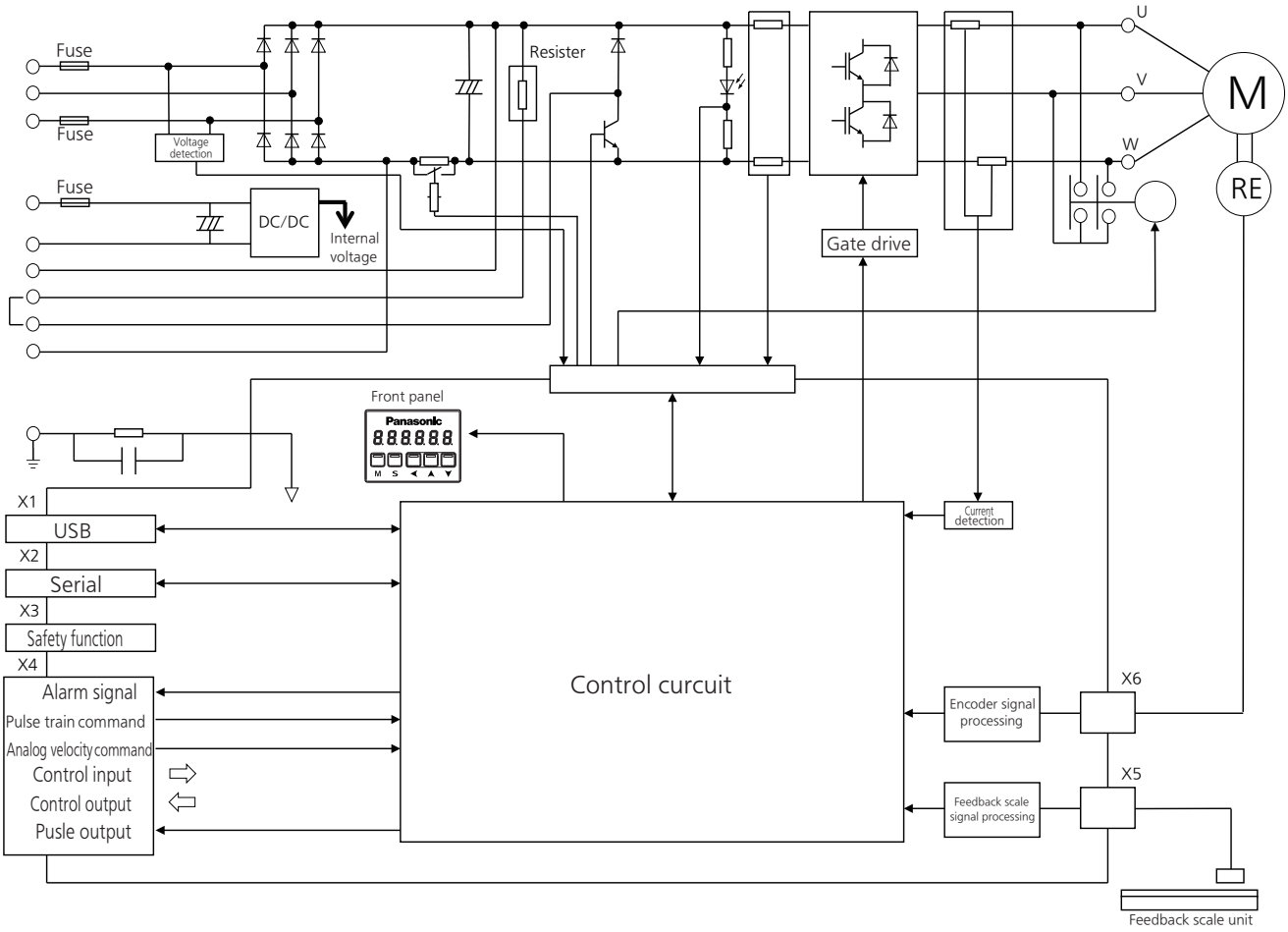

G-frame (400 V)

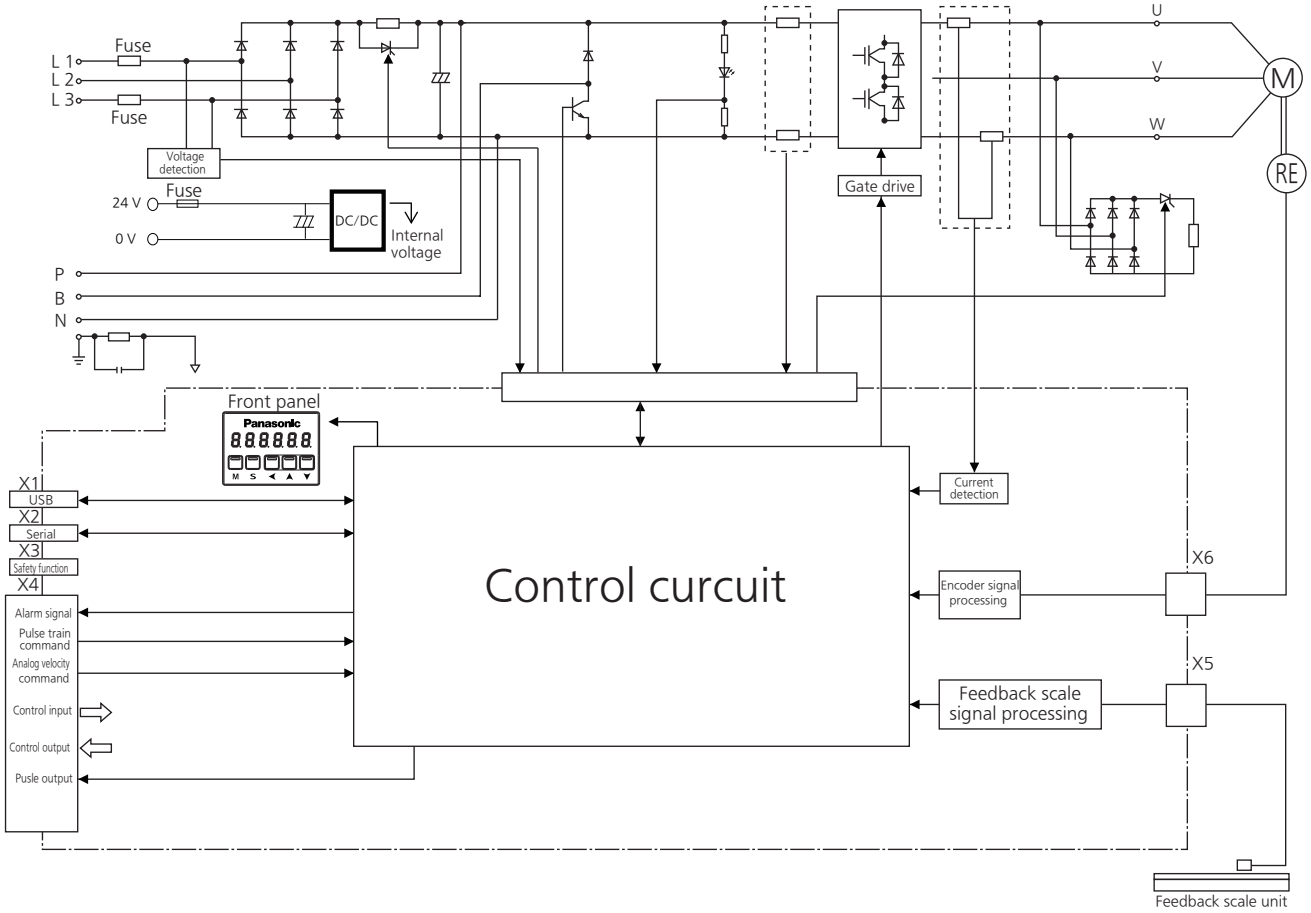

H-frame (400 V)

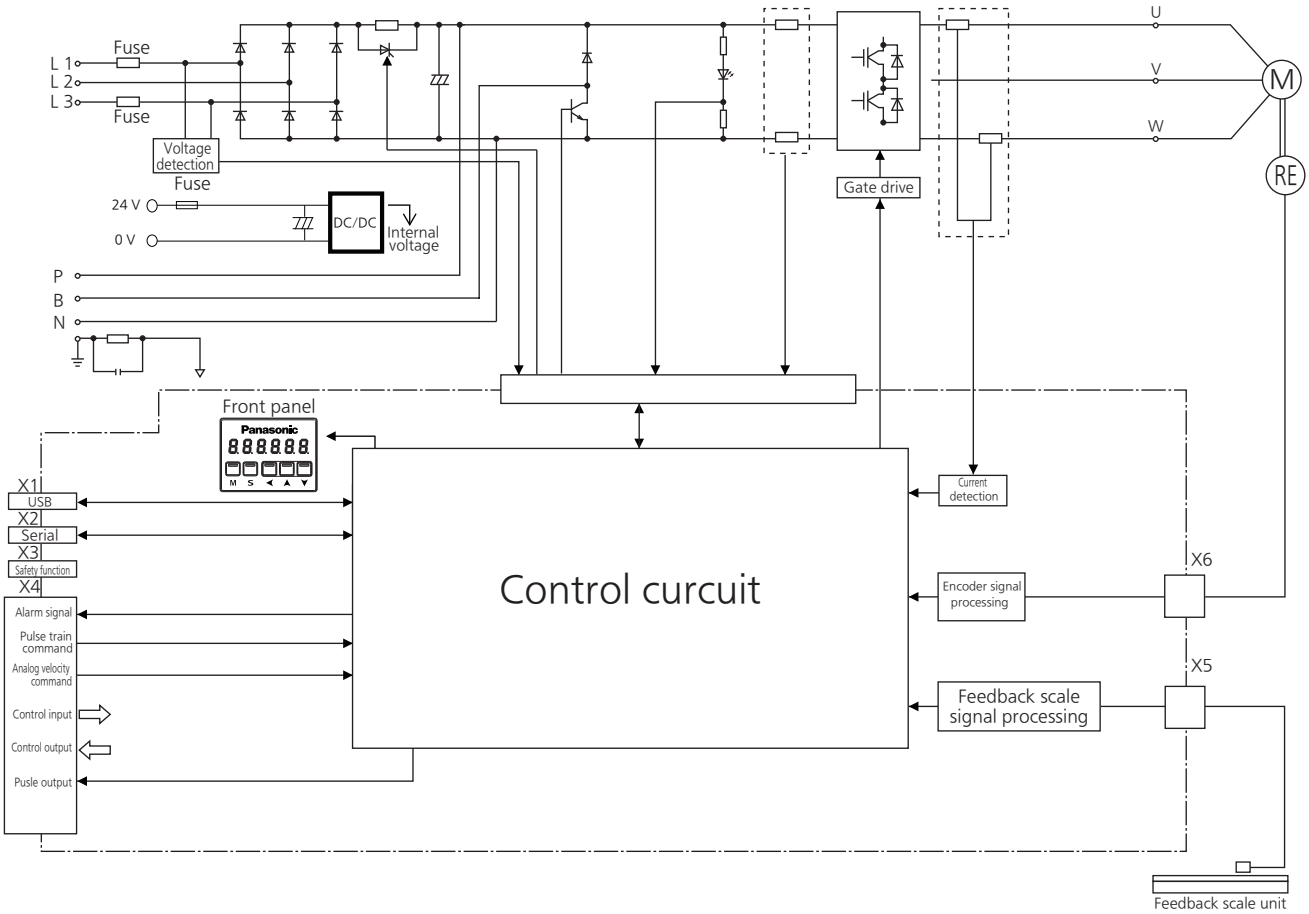

3. Motor

Check of the Model

Contents of Name Plate

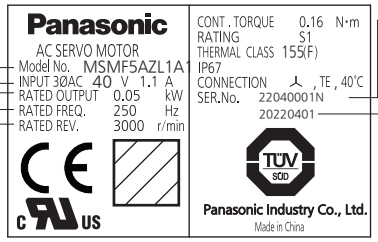

Model

Rated input voltage/current

Rated output

Rated frequency

Rated rotational speed

Serial Number
e.g.) : 22040001N
Lot number
Month of production
Year of production
(Lower 2 digits of AD year)

Manufacture date
e.g.) : 20220401
Manufacture year
Manufacture month
Manufacture date

Model Designation

M S M F 5 A Z L 1 A 1 ∗

1~3 4 5~6 7 8 9 10~11 12

Type

Symbol	Specifications
MSM	Low inertia (50 W to 5.0 kW)
MQM	Middle inertia (100 W to 400 W)
MDM	Middle inertia (1.0 kW to 22.0 kW)
MGM	Middle inertia (850 W to 5.5 kW)
MHM	High inertia (50 W to 7.5 kW)

Series

Symbol	Series name
F	A6 series

Motor rated output

Symbol	Output
5A	50 W
01	100 W
02	200 W
04	400 W
08	750 W
09	0.85 kW/1.0 kW
10	1.0 kW
13	1.3 kW
15	1.5 kW
18	1.8 kW
20	2.0 kW
24	2.4 kW
29	2.9 kW
30	3.0 kW
40	4.0 kW
44	4.4 kW
50	5.0 kW
55	5.5 kW
75	7.5 kW
C1	11.0 kW
C5	15.0 kW
C2	22.0 kW

Special specifications

Motor structure

Design order

Symbol	Specifications
1	Standard

Rotary encoder specifications

Symbol	Specifications			
	Format	Pulse count	Resolution	Wire count
L	Absolute	23-bit	8388608	7-wire

Voltage specifications

Symbol	Specifications
1	100 V
2	200 V
Z	100/200 V common (50 W only)

Motor structure

MSMF(Below □80)

Symbol		Shaft		Holding brake		Oil seal		Motor I/F	
10 dig	11 dig	Round	Key way Threaded	Without	With	Without	With	Connector type	Leadwire type
A	1	●		●		●		●	
A	2	●		●		●			●
B	1	●			●	●		●	
B	2	●			●	●			●
C	1	●		●			●	●	
C	2	●		●			●		●
D	1	●			●		●	●	
D	2	●			●		●		●
S	1		●	●		●		●	
S	2		●	●		●			●
T	1		●		●	●		●	
T	2		●		●	●			●
U	1		●	●			●	●	
U	2		●	●			●		●
V	1		●		●		●	●	
V	2		●		●		●		●

Note

- For details of specific model, refer to the Dimensions of Supplement.

Related page

- P.1-34 “Check of the Combination of the Driver and the Motor”
- P.7-101 to 7-155 “Dimensions of motor”

Model Designation

Motor structure

MQMF、MHMF(Below □80)

Symbol		Shaft		Holding brake		Oil seal			Motor I/F	
10 dig	11 dig	Round	Key way Threaded	Without	With	Without	With	With (Protective lip)	Connector type	Leadwire type
A	1	●		●		●			●	
A	2	●		●		●				●
B	1	●			●	●			●	
B	2	●			●	●				●
C	1	●		●			●		●	
C	2	●		●			●			●
C	3	●		●	●			●	●	
C	4	●		●	●			●		●
D	1	●			●		●		●	
D	2	●			●		●			●
D	3	●						●	●	
D	4	●						●		●
S	1		●	●		●			●	
S	2		●	●		●				●
T	1		●		●	●			●	
T	2		●		●	●				●
U	1		●	●			●		●	
U	2		●	●			●			●
U	3		●	●				●	●	
U	4		●	●				●		●
V	1		●		●		●		●	
V	2		●		●		●			●
V	3		●		●			●	●	
V	4		●		●			●		●

MSMF、MDMF、MGMF、MHMF(Above □100)

Symbol		Shaft		Holding brake		Oil seal		Motor I/F	
10 dig	11 dig	Round	Key way Threaded	Without	With	With	With (Protective lip)	Connector JN2	Connector JL10
C	5	●		●		●		●	
C	6	●		●		●			●
C	7	●		●			●	●	
C	8	●		●			●		●
D	5	●			●	●		●	
D	6	●			●	●			●
D	7	●			●		●	●	
D	8	●			●		●		●
G	5		●	●		●		●	
G	6		●	●		●			●
G	7		●	●			●	●	
G	8		●	●			●		●
H	5		●		●	●		●	
H	6		●		●	●			●
H	7		●		●		●	●	
H	8		●		●		●		●

Note
- For details of specific model, refer to the Dimensions of Supplement.

Related page
- P.1-34 “Check of the Combination of the Driver and the Motor”
- P.7-101 to 7-155 “Dimensions of motor”

Model Designation

400 V Motor(□80)MHMF

Symbol		Shaft		Holding brake		Oil seal		Connector
10 dig	11 dig	Round	Key way Threaded	Without	With	Without	With	L-shaped
A	9	●		●		●		●
B	9	●			●	●		●
C	9	●		●			●	●
D	9	●			●		●	●
S	9		●	●		●		●
T	9		●		●	●		●
U	9		●	●			●	●
V	9		●		●		●	●

400 V Motor(□100)MSMF、MDMF、MGMF、MHMF

Symbol		Shaft		Holding brake		Oil seal		Connector
10 dig	11 dig	Round	Key way	Without	With	Single lip	Triple lip	L-shaped
C	9	●		●		●		●
C	A	●		●			●	●
D	9	●			●	●		●
D	A	●			●		●	●
G	9		●	●		●		●
G	A		●	●			●	●
H	9		●		●	●		●
H	A		●		●		●	●

Note
- For details of specific model, refer to the Dimensions of Supplement.

Related page
- P.1-34 “Check of the Combination of the Driver and the Motor”
- P.7-101 to 7-155 “Dimensions of motor”

3. Motor

Parts Description

- MSMF 50 W to 1.0 kW(□80)
- MHMF 50 W to 1.0 kW(□80)

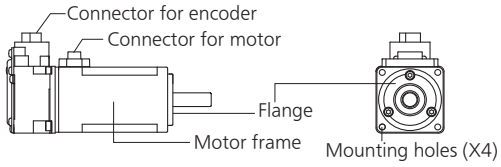

- MQMF 100 W to 400 W

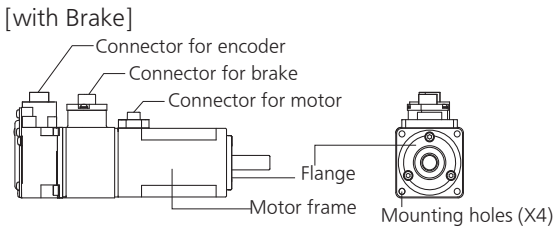

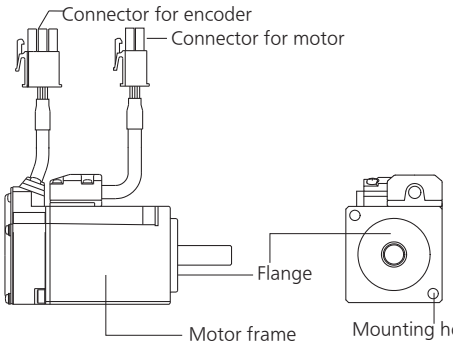

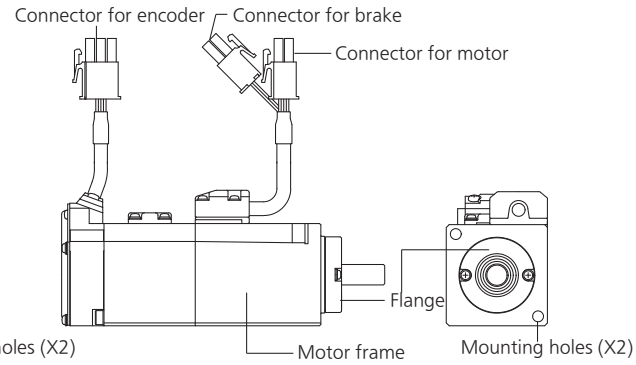

e.g.) : Low inertia type (MSMF series, 50 W), High inertia type (MHMF series, 50 W)

- MSMF 1.0 kW(□100) to 5.0 kW
- MDMF 1.0 kW to 22.0 kW
- MGMF 850 W to 5.5 kW
- MHMF 1.0 kW (□130) to 7.5 kW

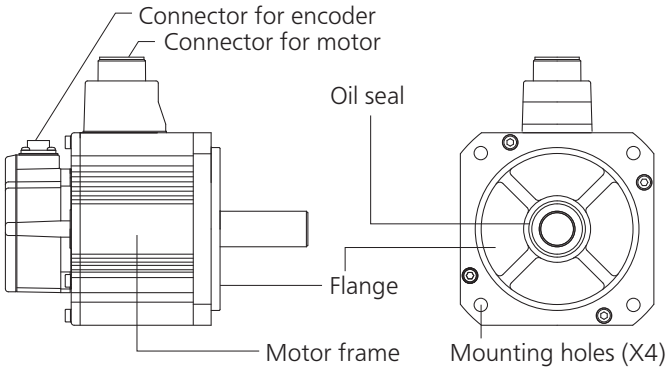

e.g.) : Middle inertia type (MDMF series, 1.0 kW)

Note For details of specific model, refer to the Dimensions of Supplement. (P.7-101 to 7-155)

- MHMF 200 W to 1.0 kW(□ 80)(400 V)

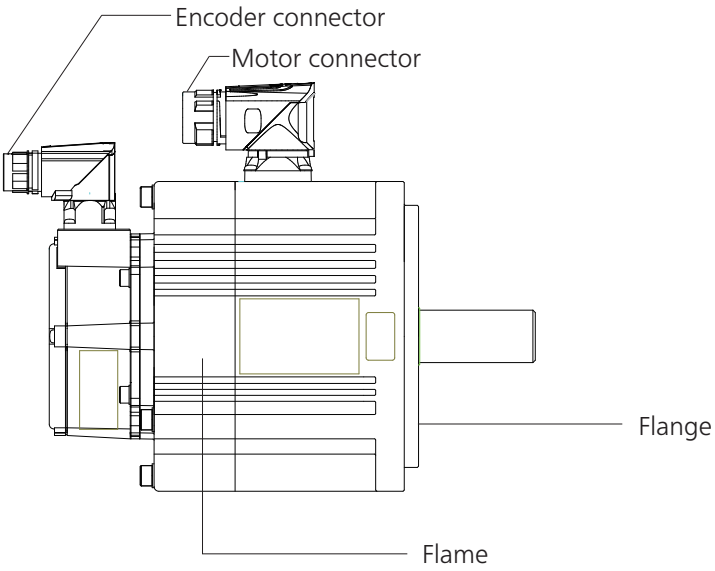

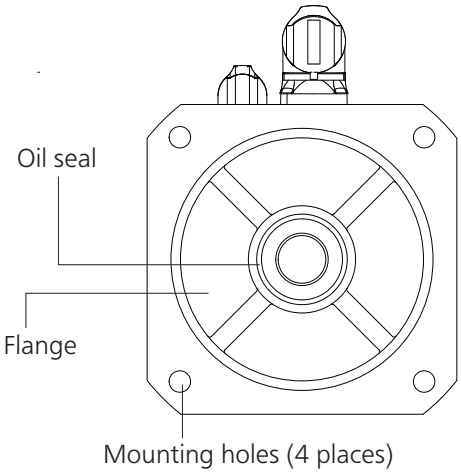

- MSMF 1.0 kW to 5.0 kW (400 V)
- MDMF 1.0 kW to 5.0 kW (400 V)
- MGMF 850 kW to 4.4 kW (400 V)
- MHMF 1.0 kW(□ 130) to 5.0 kW (400 V)

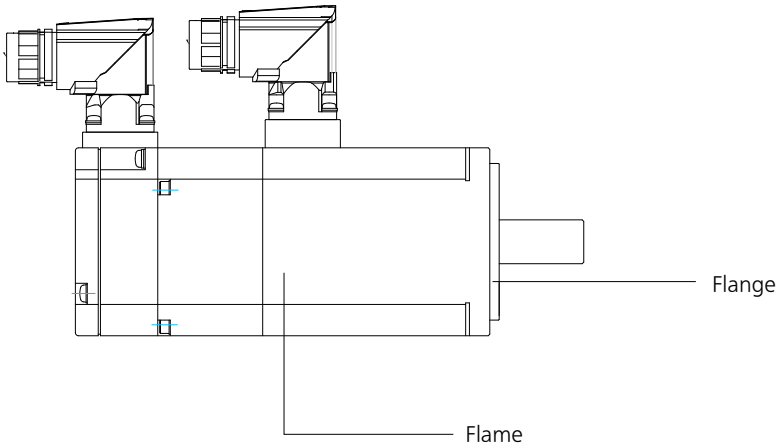

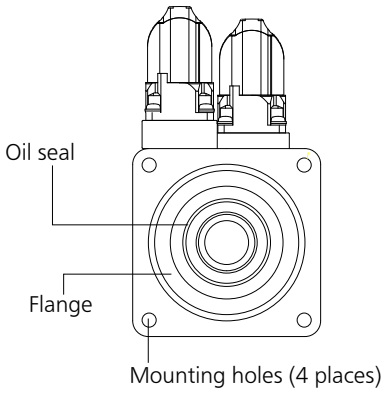

Note For details of specific model, refer to the Dimensions of Supplement. (P.7-101 to 7-155)

4. Check of the Combination of the Driver and the Motor

Absolute Specifications, 23-bit

This driver is designed to be used in a combination with the motor which are specified by us. Check the series name of the motor, rated output torque, voltage specifications and encoder specifications.

Remarks Do not use in other combinations than those listed below.

Motor					Driver	
Power supply	Type	Rated rotational speed	Model *1	Rated output	Model of type *1	Frame
Single 100 V	MSMF Low inertia	3000 r/min	MSMF5AZ□1□□□	50 W	MADL□01S□	A Frame
			MSMF011□1□□□	100 W	MADL□11S□	
			MSMF021□1□□□	200 W	MBDL□21S□	B Frame
			MSMF041□1□□□	400 W	MCDL□31S□	C Frame
Single/ 3-phase, 200 V			MSMF5AZ□1□□□	50 W	MADL□05S□	A Frame
			MSMF012□1□□□	100 W		
			MSMF022□1□□□	200 W	MADL□15S□	
			MSMF042□1□□□	400 W	MBDL□25S□	B Frame
			MSMF082□1□□□	750 W	MCDL□35S□	C Frame
			MSMF092□1□□□	1.0 kW	MDDL□45S□	D Frame
			MSMF102□1□□□	1.0 kW	MDDL□55S□	D Frame
			MSMF152□1□□□	1.5 kW		
Single/ 3-phase, 200 V			MSMF202□1□□□	2.0 kW	MEDL□83S□	E Frame
			MSMF302□1□□□	3.0 kW	MFDL□A3S□	F Frame
			MSMF402□1□□□	4.0 kW	MFDL□B3S□	
			MSMF502□1□□□	5.0 kW		
3-phase, 400 V			MSMF104□1□□□	1.0 kW	MDDL □ 64S □	D Frame
			MSMF154□1□□□	1.5 kW		
			MSMF204□1□□□	2.0 kW	MEDL □ 84S □	E Frame
			MSMF304□1□□□	3.0 kW	MFDL □ A4S □	F Frame
			MSMF404□1□□□	4.0 kW	MFDL □ B4S □	
			MSMF504□1□□□	5.0 kW		
Single 100 V	MQMF Middle inertia	3000 r/min	MQMF011□1□□□	100 W	MADL□11S□	A Frame
			MQMF021□1□□□	200 W	MBDL□21S□	B Frame
			MQMF041□1□□□	400 W	MCDL□31S□	C Frame
Single/ 3-phase, 200 V			MQMF012□1□□□	100 W	MADL□05S□	A Frame
			MQMF022□1□□□	200 W	MADL□15S□	
			MQMF042□1□□□	400 W	MBDL□25S□	B Frame
Single/ 3-phase, 200 V	MDMF Middle inertia	2000 r/min	MDMF102□1□□□	1.0 kW	MDDL□45S□	D Frame
			MDMF152□1□□□	1.5 kW	MDDL□55S□	
3-phase, 200 V			MDMF202□1□□□	2.0 kW	MEDL□83S□	E Frame
			MDMF302□1□□□	3.0 kW	MFDL□A3S□	F Frame
			MDMF402□1□□□	4.0 kW	MFDL□B3S□	
			MDMF502□1□□□	5.0 kW		
			MDMF752L1□□□	7.5 kW	MGDL□C3S□	G Frame
			MDMFC12L1□□□	11.0 kW	MHDL□E3S□	H Frame
			MDMFC52L1□□□	15.0 kW		
			MDMFD22L1□□□	22.0 kW	MHDL□F3S□	

Note *1 Suffix of "□" in the applicable model represents the structure.

Related page • For details of cable and connector kit, refer to P.7-156 the Options of Supplement.

4. Check of the Combination of the Driver and the Motor

Absolute Specifications, 23-bit

Motor					Driver	
Power supply	Type	Rated rotational speed	Model *1	Rated output	Model of type *1	Frame
3-phase, 400 V	MDMF Low inertia	2000 r/min	MDMF104 □ 1 □□□	1.0 kW	MDDL □ 54S □	D Frame
			MDMF154 □ 1 □□□	1.5 kW	MDDL □ 64S □	
			MDMF204 □ 1 □□□	2.0 kW	MEDL □ 84S □	E Frame
			MDMF304 □ 1 □□□	3.0 kW	MFDL □ A4S □	F Frame
			MDMF404 □ 1 □□□	4.0 kW	MFDL □ B4S □	
			MDMF504 □ 1 □□□	5.0 kW		
Single/ 3-phase, 200 V	MGMF Middle inertia	1500 r/min	MGMF092 □ 1□□□	850 W	MDDL□45S□	D Frame
			MGMF132 □ 1□□□	1.3 kW	MDDL□55S□	
3-phase, 200 V			MGMF182 □ 1□□□	1.8 kW	MEDL□83S□	E Frame
			MGMF242 □ 1□□□	2.4 kW	MEDL□93S□	
			MGMF292 □ 1□□□	2.9 kW	MFDL□B3S□	F Frame
			MGMF442 □ 1□□□	4.4 kW		
			MGMF552L1□□□	5.5 kW	MGDL□C3S□	G Frame
3-phase, 400 V			MGMF094□1□□□	850 W	MDDL □ 54S □	D Frame
			MGMF134 □ 1 □□□	1.3 kW	MDDL □ 64S □	
			MGMF184 □ 1 □□□	1.8 kW	MEDL □ 84S □	E Frame
			MGMF244 □ 1 □□□	2.4 kW	MFDL □ A4S □	F Frame
			MGMF294 □ 1 □□□	2.9 kW	MFDL □ B4S □	
			MGMF444 □ 1 □□□	4.4 kW		
Single 100 V	MHMF High inertia	3000 r/min	MHMF5AZ □ 1□□□	50 W	MADL□01S□	A Frame
			MHMF011 □ 1□□□	100 W	MADL□11S□	
			MHMF021 □ 1□□□	200 W	MBDL□21S□	B Frame
			MHMF041 □ 1□□□	400 W	MCDL□31S□	C Frame
Single/ 3-phase, 200 V			MHMF5AZ □ 1□□□	50 W	MADL□05S□	A Frame
			MHMF012 □ 1□□□	100 W		
			MHMF022 □ 1□□□	200 W	MADL□15S□	
			MHMF042 □ 1□□□	400 W	MBDL□25S□	B Frame
			MHMF082 □ 1□□□	750 W	MCDL□35S□	C Frame
			MHMF092 □ 1□□□	1.0 kW	MDDL□55S□	D Frame
			MHMF102 □ 1□□□	1.0 kW	MDDL□45S□	
			MHMF152 □ 1□□□	1.5 kW	MDDL□55S□	
3-phase, 200 V			MHMF202 □ 1□□□	2.0 kW	MEDL□83S□	E Frame
			MHMF302 □ 1□□□	3.0 kW	MFDL□A3S□	F Frame
			MHMF402 □ 1□□□	4.0 kW	MFDL□B3S□	
			MHMF502 □ 1□□□	5.0 kW		
			MHMF752L1□□□	7.5 kW	MGDL□C3S□	G Frame
3-phase, 400 V			MHMF024 □ 1 □□□	200 W	MDDL □ 44S □	D Frame
			MHMF044 □ 1 □□□	400 W		
			MHMF084 □ 1 □□□	750 W	MDDL □ 54S □	
			MHMF094 □ 1 □□□	1.0 kW	MDDL □ 64S □	

Note *1 Suffix of "□" in the applicable model represents the structure.

- For details of cable and connector kit, refer to P.7-156 the Options of Supplement.

Motor					Driver	
Power supply	Type	Rated rotational speed	Model *1	Rated output	Model of type *1	Frame
3-phase, 400 V	MHMF High inertia	2000 r/min	MHMF104 □ 1 □□□	1.0 kW	MDDL □ 54S □	D Frame
			MHMF154 □ 1 □□□	1.5 kW	MDDL □ 64S □	
			MHMF204 □ 1 □□□	2.0 kW	MEDL □ 84S □	E Frame
			MHMF304 □ 1 □□□	3.0 kW	MFDL □ A4S □	F Frame
			MHMF404 □ 1 □□□	4.0 kW	MFDL □ B4S □	
			MHMF504 □ 1 □□□	5.0 kW		

Note

1) 400 V specification motors are not sold in Japan. In addition, 400 V specification motors purchased outside Japan and equipment equipped with 400 V specification motors cannot be brought into Japan.

5. Installation

Driver

Install the driver properly to avoid a breakdown or an accident.

Installation Place

1) Install the driver in a control panel enclosed in noncombustible material and placed indoor where the product is not subjected to rain or direct sunlight. The products are not waterproof.
2) Where the products are not subjected to corrosive atmospheres such as hydrogen sulfide, sulfurous acid, chlorine, ammonia, sulfur, chloric gas, sulfuric gas, acid, alkaline and salt and so on, and are free from splash of inflammable gas.
3) Where the motor is free from grinding oil, oil mist, iron powder or chips.
4) Well-ventilated and low humidity and dust-free place.
5) Vibration-free place.
6) Do not use benzine, thinner, alcohol, acidic cleaner and alkaline cleaner because they can discolor or damage the exterior case.

Environmental Conditions

Item	Conditions
Ambient temperature	0 ℃ to 55 ℃ *1 (free from freezing)
Ambient humidity	20 % to 85 % RH (free from condensation)
Storage temperature*1	−20 ℃ to 65 ℃ (Max. temperature guarantee: 80 ℃ for 72 hours free from condensation*2)
Storage humidity	20 % to 85 % RH (free from condensation*2)
Vibration	Lower than 5.88 m/s^2 , 10 Hz to 60 Hz (Do not continuously use the driver for along time at the resonance point.)
Altitude	Lower than 1000 m

*1 Extreme temperatures are permissible only for short period such as during transportation.
*2 Air containing water vapor will become saturated with water vapor as the temperature falls, causing dew.

How to Install

1) Rack-mount type. Install in vertical position, and reserve enough space around the servo driver for ventilation.
2) Base mount (rear mount) is standard for A/B/C/D-frame driver.
3) To change the mounting surface of A/B/C/D-frame driver, use the optional mounting bracket. For choosing the correct optional mounting bracket, refer to P.7-195 “Mounting Bracket” .
4) In consideration of strength of the screws and the material of the mounting base, select appropriate fastening torque for the product mounting screws, so that the screws will not be loosened or damaged.
   Example) To tighten a steel screw into a steel base
   A to G-frame: M5 2.7 N•m to 3.3 N•m H-frame: M6 4.68 to 5.72 N•m

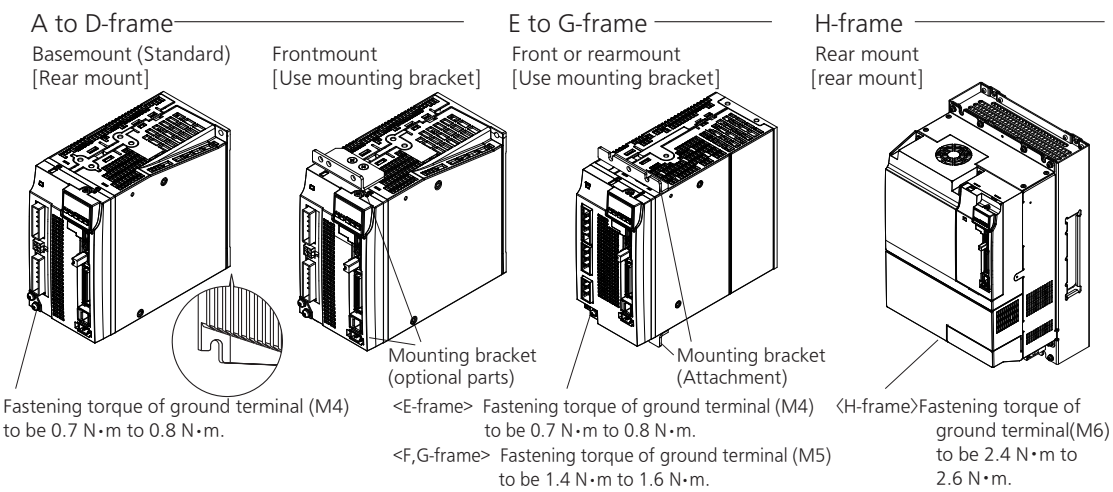

Mounting Direction and Spacing

- Reserve enough surrounding space for effective cooling.
- Install fans to provide uniform distribution of temperature in the control panel.
- Cooling fan is installed at the bottom of D to F-frame and top/bottom of G, H-frame.
- Observe the environmental conditions of the control panel described in the previous page.

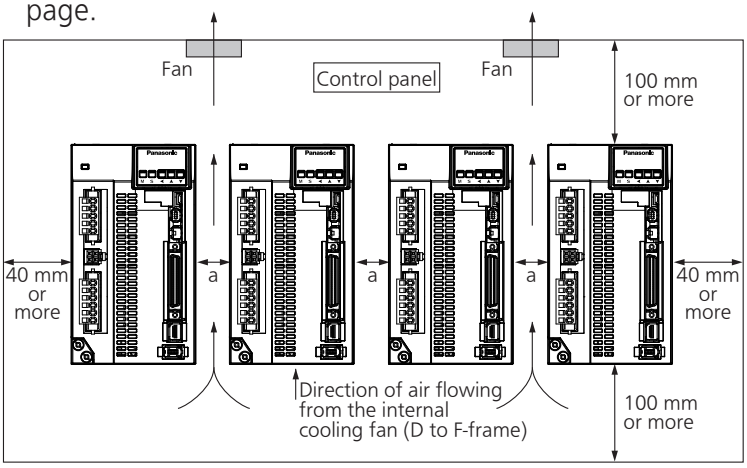

	a
A to H-frame	10 mm or more

Note It is recommended to use the conductive paint when you make your own mounting bracket, or repaint after peeling off the paint on the machine for installing the products, in order to make noise countermeasure.

Caution on Installation

Caution

- We have been making the best effort to ensure the highest quality, however, application of exceptionally large external noise disturbance and static electricity, or failure in input power, wiring and components may result in unexpected action. It is highly recommended that you make a fail-safe design and secure the safety in the operative range.
- If stranded wires are used as the cable, bunch the conductors of the cable using a rod terminals or a round terminals. If stranded wires are used as they are, unexpected accidents such as an electric shock and short circuit or injury may result.
- There might be a chance of smoke generation due to the failure of these products. Pay an extra attention when you apply these products in a clean room environment.
- Be sure to install a circurt breaker (MCCB) in the power supply. In addition, be sure to ground the grounding terminal or grounding wire provided. (In order to prevent electric shock and malfunctions, Class D grounding [grounding resistance of 100 Ω or less] is recommended.)
  If the product is grounded insufficiently, not only the driver may not deliver its performance sufficiently, but also safety hazards such as a malfunction due to a electrification or a disturbance may be caused.
- If electric wires are bound and run through metal duct, they cannot carry the rated current due to temperature rise. If they are forced to carry the rated current, they may burn. When determining size of the wire.
- Do not use or store the product in a place subject to 5.88 m/s^2 or more vibration or shock, foreign materials such as dust, metallic powder and oilmist, liquids such as water, oil and grinding fluid, close to flammable materials, or in an atmosphere of corrosive gas (H_2S, SO_2, NO_2, Cl_2, etc.) or inflammable gas under any circumstance.

Related page
- P.1-17 “Specifications” • P.1-41 “Installation of Motor”
- P.7-93 “Dimensions of driver” • P.7-195 “Mounting bracket”

- Be sure to conduct wiring properly and securely. Insecure or improper wiring may cause the motor running out of control or being damaged from overheating. In addition, pay attention not to allow conductive materials, such as wire chips, entering the driver during the installation and wiring.
- Secure the screws and earth screw on the terminal block with the torque specified in the specification.
- When establishing a system using safety functions, completely understand the applicable safety standards and the operating instruction manual or technical documents for the product.
- Never make an approach to the motor and the machines driven by the motor while power is applied because they may become failure or malfunction.
- Do not use servo-on signal (SRV-ON) as the start/stop signal. Doing so may damage the built-in dynamic brake circuit in the driver.
- Pay attention to the heat dissipation. The driver will generate heat while the motor is in operation. Using the driver in a sealed control box may cause an abnormal heating of the control box. A proper consideration should be given to cool the driver so that the ambient temperature matches the specified operating temperature range.
- There is a possibility that the motor will be damaged by heat or emit smoke or dust due to a fault in the motor itself or the driver coupled with it. A proper consideration should be given if the motor is used in a clean room or similar environment.
- If the dynamic brake is applied during operation at a high speed, provide approx. 10-minute dwell period.
  Restarting the motor earlier may cause a broken wire in the dynamic brake making the brake inoperable.
- The capacitance of capacitor in the power supply rectifier circuit decreases its capacitance with age.
  To prevent a secondary accident due to malfunction, it should be replaced with new one after 5-year use.
  Replacement should be performed by us or our authorized distributor.
- Before using the product, be sure to read the instruction manual (Safety part).

Recommended Electric Wires for Driver

- For the main circuit, use electric wire that withstands at least 600 VAC with temperature rating 75℃ or higher.
- When using bundled wires running through metallic conduit, the amounts of current determined according to the reduction rate must be subtracted from the nominal allowable current.
- Electric wires
  <In high ambient temperature>
  Use heat resistant wire.
  Common polyvinyl chloride wires will deteriorate by heat at a higher rate.
  <In low ambient temperature>
  The surface of vinyl chloride insulation becomes hardened and brittle at low temperature and needs specific protective measure when used in cold region.
- Bend radius of the cable must be 10 times or more its finish outside diameter.
- Cables cannot be used for continuous regeneration because they are not designed for such application.

Related page
- P.1-17 “Specifications”
- P.1-41 “Installation of Motor”
- P.7-93 “Dimensions of driver”
- P.7-195 “Mounting bracket”

Relationship between Wire Diameter and Permissible Current

- When selecting a cable, refer to the following selection guide showing relationship between cable specification and current carrying capacity.

Example: Power supply 3-phase, 200 V, 35 A, ambient temperature 30℃

Determine the fundamental permissible current according to the cable conductor material (example: stranded copper wire). (For the purpose of this example, the ampere indicated by ◇ is selected from the table right.)
Next, determine the number of conductors. (In this example, the cable contains 4 conductors (3 + ground).) Determine the applicable permissible current using the following formula.

Applicable permissible current
= fundamental permissible current x current reduction coefficient x current correction coefficient
= 37 x 0.7 x 1.414
≒ 36.6 (A)

This permissible value is larger than 35 A to be carried though the cable. Therefore, according to the list of recommended eco-cables, the cable to be selected for the cable with nominal cross section 3.5 mm² is a polyethylene-insulated heat-resistant 4-conductor power cable having 13.5 mm finish O.D. (approx. 14.5 mm with shield).

- Fundamental permissible current

	Stranded conductor (nominal cross section: mm²)	Copper wire (unit: A)
	2 to 3.5 (excl.)	27
◇	3.5 to 5.5 (excl.)	37
	5.5 to 8 (excl.)	49
	8 to 14 (excl.)	61
	14 to 22 (excl.)	88
	11 to 30 (excl.)	115
	30 to 38 (excl.)	139
	38 to 68 (excl.)	162
	60 to 100 (excl.)	217
	100 to 150 (excl.)	298
	150 to 200 (excl.)	395

<Supplement>
- The current correction coefficient is determined using the following formula:
  $\sqrt{(\text{Max. permissible temp.} - \text{ambient temp.}) \div 30}$

Caution The current correction coefficient is determined according to the cable. Check the specification of the cable used.

- The current reduction coefficient is provided for the case where the cable (4-conductor cable in the case of example), is housed in plastic race/sheath, plastic tube, metal race/sheath, metal tube or flexible conduit.

Caution Because the neutral conductor is not counted as a wire, the current reduction coefficient for "3 or less" is applied as indicated by (◎) in the table right.

- Current reduction coefficient

	No. of wires in a tube	Coefficient
◎	Up to 3	0.70
	4	0.63
	5 or 6	0.56
	7 to 15	0.49
	16 to 40	0.43
	41 to 60	0.39
	61 or more	0.34

• Recommended eco-cable

Wire category: 4-conductor polyethylene-insulated power cable with heat-resistant polyethylene sheath (Standard: EM JIS C 3605) Maximum permissible temperature: 90℃

Conductor			Insulation thickness (mm)	Sheath thickness (mm)	(Reference) Finish O.D. (mm)	Max. conductor resistance (20 °C) (W/km)	Test voltage (V/1 min.)	Minimum insulation resistance (MW•km)	(Reference) Approx. mass (kg/km)
Nominal cross section (mm²)	Structure or shape (wires/mm²)	Outside diameter (mm)							
2	7/0.6	1.8	0.8	1.5	12.0	9.42	1500	2500	170
3.5	7/0.8	2.4	0.8	1.5	13.5	5.30	1500	2500	250
5.5	7/1.0	3.0	1.0	1.5	16.0	3.40	1500	2500	360
8	7/1.2	3.6	1.0	1.5	17.0	2.36	1500	2000	475
14	Circular compression	4.4	1.0	1.5	19.0	1.34	2000	1500	730
22	Circular compression	5.5	1.2	1.6	23	0.849	2000	1500	1100
38	Circular compression	7.3	1.2	1.8	28	0.491	2500	1500	1800
60	Circular compression	9.3	1.5	2.0	35	0.311	2500	1500	2790
100	Circular compression	12.0	2.0	2.4	44	0.187	2500	1500	4630
150	Circular compression	14.7	2.0	2.6	51	0.124	3000	1000	6710
200	Circular compression	17.0	2.5	2.9	60	0.0933	3000	1500	8990

Caution Shield will increase finish outside diameter by approx. 1 mm.

Note
- Appropriate cable should be selected to have sufficient allowance for parameters such as operating ambient temperature and current.
- Current reduction coefficient, fundamental permissible current, etc., stated on this page are subject to change due to e.g. standard revision. Consult cable manufacturers for the latest information.

5. Installation

Motor

Install the motor properly to avoid a breakdown or an accident.

Installation Place

Since the conditions of location affect a lot to the motor life, select a place which meets the conditions below.

1) Indoors, where the products are not subjected to rain or direct sun beam. The products are not waterproof.
2) Where the products are not subjected to corrosive atmospheres such as hydrogen sulfide, sulfurous acid, chlorine, ammonia, sulfur, chloric gas, sulfuric gas, acid, alkaline and salt and so on, and are free from splash of inflammable gas.
3) Where the motor is free from grinding oil, oil mist, iron powder or chips.
4) Well-ventilated and humid and dust-free place, far apart from the heat source such as a furnace.
5) Easy-to-access place for inspection and cleaning
6) Vibration-free place.
7) Avoid enclosed place. Motor may gets hot in those enclosure and shorten the motor life.

Environmental Conditions

Item		Conditions
Ambient temperature*1		0 ℃ to 40 ℃ (free from freezing)
Ambient humidity		20 % to 85 % RH (free from condensation)
Storage temperature*2		−20 ℃ to 65 ℃ (Max. temperature guarantee: 80 ℃ for 72 hours free from condensation*4)
Storage humidity		20 % to 85 % RH (free from condensation*4)
Vibration	Motor only	Below 5.0 KW : Lower than 49 m/s² (5 G) at running, 24.5 m/s² (2.5 G) at stall Exceed 5.0 KW : Lower than 24.5 m/s² (2.5 G) at running, 24.5 m/s² (2.5 G) at stall
Impact	Motor only	Lower than 98 m/s² (10 G)
Protection structure*3	Motor only (Connector type)	IP67(When the specified cable is used, rotating portion of output shaft and connecting pin part of the motor connector and the encoder connector are excluded) 5.5~15.0kW: IP67(When the specified cable is used, connecting pin part of the encoder connector, driver side of cable and rotating portion of output shaft are excluded) 22.0kW: IP44(When the specified cable is used, cable connecting part of connector, metal circle outlet of protection circuit after flat plate hole of terminal box, driver side of cable and rotating portion of output shaft are excluded)
	Motor only (Leadwire type)	IP65(except rotating portion of output shaft and connecting pin part of the motor connector and the encoder connector)
Altitude		Lower than 1000 m

*1 Ambient temperature to be measured at 5 cm away from the motor.
*2 Permissible temperature for short duration such as transportation.
*3 These motors conform to the test conditions specified in EN standards (EN60529, EN60034-5). Do not use these motors in application where water proof performance is required such as continuous wash-down operation.
*4 Air containing water vapor will become saturated with water vapor as the temperature falls, causing dew.

How to Install

You can mount the motor either horizontally or vertically as long as you observe the followings.

1) Horizontal mounting
   - Mount the motor with cable outlet facing downward for water/oil countermeasure.
2) Vertical mounting
   - Use the motor with oil seal when mounting the motor with gear reducer to prevent the reducer oil/grease from entering to the motor.

Oil/Water Protection

1) Don't submerge the motor cable to water or oil.
2) Install the motor with the cable outlet facing downward.
3) Avoid a place where the motor is always subjected to oil or water.
4) Use the motor with an oil seal when used with the gear reducer, so that the oil may not enter to the motor through shaft.

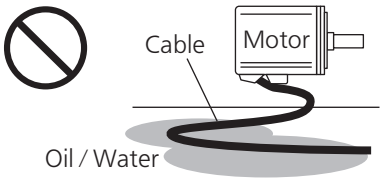

Stress to Cables

1) Avoid a stress application to the cable outlet and connecting portion by bending or self-weight.
2) Especially in an application where the motor itself travels, fix the junction cable into the bearer so that the stress by bending can be minimized.
3) Take the cable bending radius as large as possible. (When you use our optional cable, Minimum R20 mm)

Permissible Load to Output Shaft

1) Design the mechanical system so that the applied radial load and/or thrust load to the motor shaft at installation and at normal operation can meet the permissible value specified to each model.
2) Pay an extra attention when you use a rigid coupling. (Excess bending load may damage the shaft or deteriorate the bearing life.)
3) Use a flexible coupling with high stiffness designed exclusively for servo application in order to make a radial thrust caused by micro misalignment smaller than the permissible value.

Note For permissible load of each model, refer to P.1-33, "Permissible Load at Output Shaft".

Notes on Installation

1) Do not apply direct impact to the shaft by hammer while attaching/detaching a coupling to and from the motor shaft.
(Or it may damage the encoder mounted on the other side of the shaft.)
2) Make a full alignment. (incomplete alignment may cause vibration and damage the bearing.)

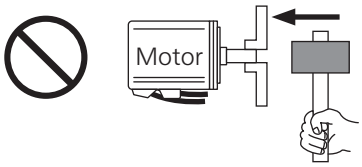

3) If the motor shaft is not electrically grounded, it may cause electrolytic corrosion to the bearing depending on the condition of the machine and its mounting environment, and may result in the bearing noise. Check and verification by customer is required.

Related page
- P.1-37 "Installation of driver"
- P.1-44 "Permissible Load at Output Shaft"
- P.7-101 "Dimensions of motor"

Wiring Precautions on Movable Section

When wiring cable bear, take the following precautions:

- Cable bear wiring
  The bend radius of the cable must be 10 times or more its finish outside diameter.
  (For finish outside diameter, refer to P.1-37 How to Install, "Relationship between Wire Diameter and Permissible Current" and associated tables.)
  Do not fix or bundle wires in the cable bear.
  When securing the cable, fix it only at non-movable ends of the cable bear where the cable is free from any stress (e.g. tension). (Avoid tight lock.)

  [Recommended cable bear wiring]

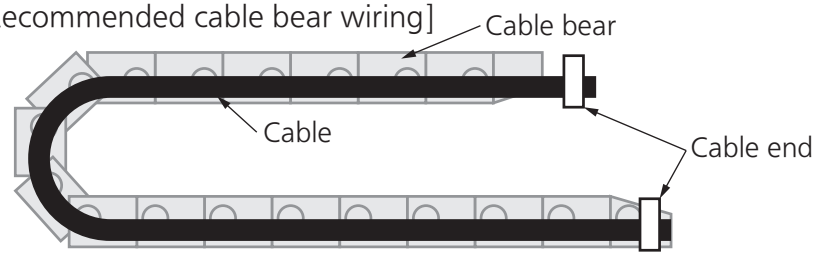

Caution Do not keep the cable loosened (too long) or under tension (too short). Otherwise, the sheath will be cracked by internal wall of the cable bear, tangled by other cable, etc., causing unpredictable troubles.

- Cable distortion
  Keep the cable free from twists or kinks.
  Distorted cable will cause loose connection, lowering performance and reliability.

- Lamination factor of cable in cable bear
  Place cables on a flat surface in parallel without bringing them into contact with each other and measure the dimension necessary to cover these cables. Then select a cable bear which is wider than the measured dimension.
  The lamination factor of cables should be lower than 60 % (recommended factor is 30 % or below).
  Do not run smaller and larger size cables in the same cable bear. Thin cables may break under the pressure of thick cables. If it is necessary to mix cables of different size, isolate them by using suitable separating material such as partition.

  [Wiring arrangement in cable bear – example]

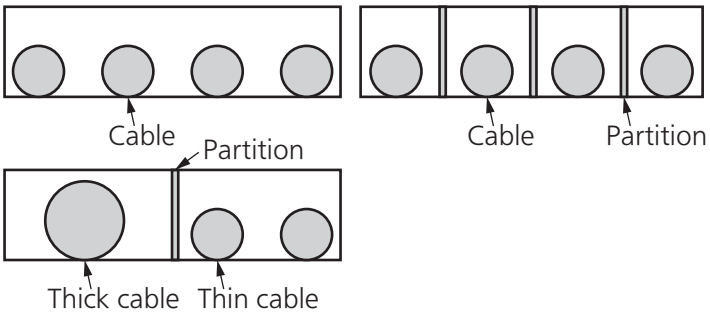

6. Permissible Load at Output Shaft

Motor

Radial load (P) direction

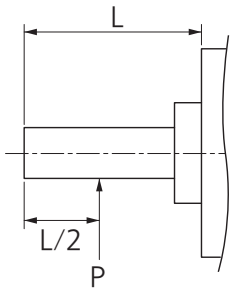

Thrust load (A and B) direction

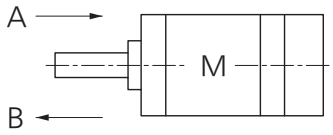

Unit : N (1 kgf=9.8 N)

Motor series	Motor output	At assembly			During running	
		Radial thrust	Thrust load		Radial thrust	Thrust load A and B-direction
			A-direction	B-direction		
MSMF	50 W, 100 W	147	88	117.6	68.6	58.8
	200 W, 400 W	392	147	196	245	98
	750 W, 1.0 kW(□80)	686	294	392	392	147
	1.0 kW(□100) to 3.0 kW	980	588	686	490	196
	4.0 kW, 5.0 kW				784	343
MQMF	100 W	147	88	117.6	68.6	58.8
	200 W, 400 W	392	147	196	245	98
MDMF	1.0 kW to 2.0 kW	980	588	686	490	196
	3.0 kW				784	343
	4.0 kW, 5.0 kW	1666	784	980		
	7.5 kW	2058	980	1176	1176	490
	11.0 kW, 15.0 kW 22.0 kW	4508	1470	2646	2254	686
MGMF	850 W to 1.8 kW	980	588	686	686	196
	2.4 kW	1666	784	980	1176	490
	2.9 kW					
	4.4 kW				1470	
	5.5 kW	2058	980	1176	1176	
MHMF	50 W	147	88	117.6	68.6	49
	100 W					58.8
	200 W, 400 W	392	147	196	245	98
	750 W, 1.0 kW(□80)	686	294	392	392	147
	1.0 kW(□130), 1.5 kW	980	588	686	490	196
	2.0 kW to 5.0 kW	1666	784	980	784	343
	7.5 kW	2058	980	1176	1176	490

Note When the load point varies, calculate the permissible radial load, P (N) from the distance of the load point, L (mm) from the mounting flange based on the formula of the right table, and make it smaller than the calculated result.

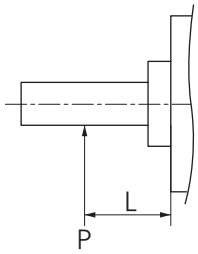

Motor series	Motor output	Formula of Load and load point relation	
		Without oil seal With oil seal	With oil seal With protection lip
MSMF	50 W	$P=\frac{3533}{L+39}$	
	100 W	$P=\frac{4905}{L+59}$	
	200 W	$P=\frac{14945}{L+46}$	
	400 W	$P=\frac{19723}{L+66.5}$	
	750 W	$P=\frac{37044}{L+77}$	
	1.0 kW(□80)	$P=\frac{43198}{L+92.7}$	
	1.0 kW(□100) to 3.0 kW	$P=\frac{20090}{L+13.5}$	
	4.0 kW to 5.0 kW	$P=\frac{36848}{L+14.5}$	
MQMF	100 W	$P=\frac{2833}{L+28.8}$	$P=\frac{3005}{L+28.8}$
	200 W	$P=\frac{12544}{L+36.2}$	$P=\frac{13157}{L+36.2}$
	400 W	$P=\frac{15484}{L+48.2}$	$P=\frac{16097}{L+48.2}$
MDMF	1.0 kW to 2.0 kW	$P=\frac{19110}{L+11.5}$	
	3.0 kW	$P=\frac{34496}{L+11.5}$	
	4.0 kW, 5.0 kW	$P=\frac{42336}{L+19}$	
	7.5 kW	$P=\frac{89964}{L+20}$	
	11.0 kW, 15.0 kW, 22.0 kW	$P=\frac{200606}{L+31}$	

Motor series	Motor output	Formula of Load and load point relation	
		Without oil seal With oil seal	With oil seal With protection lip
MGMF	850 W to 1.8 kW	$P=\frac{26754}{L+11.5}$	
	2.4 kW	$P=\frac{63504}{L+19}$	
	2.9 kW	$P=\frac{63504}{L+19}$	
	4.4 kW	$P=\frac{79380}{L+19}$	
	5.5 kW	$P=\frac{89964}{L+20}$	
MHMF	50 W	$P=\frac{2833}{L+28.8}$	$P=\frac{3005}{L+28.8}$
	100 W	$P=\frac{3794}{L+42.8}$	$P=\frac{3965}{L+42.8}$
	200 W	$P=\frac{13647}{L+40.7}$	$P=\frac{14259}{L+40.7}$
	400 W	$P=\frac{18081}{L+58.8}$	$P=\frac{18694}{L+58.8}$
	750 W	$P=\frac{32654}{L+65.8}$	$P=\frac{33634}{L+65.8}$
	1.0 kW(□80)	$P=\frac{37750}{L+78.8}$	$P=\frac{38730}{L+78.8}$
	1.0 kW(□130), 1.5 kW	$P=\frac{22785}{L+11.5}$	
	2.0 kW to 5.0 kW	$P=\frac{46256}{L+19}$	
	7.5 kW	$P=\frac{89964}{L+20}$	

Motor series	Motor output	Formula of Load and load point relation	
		Without oil seal With oil seal	With oil seal With protection lip
MSMF (400 V)	1.0 kW(□100) to 3.0 kW	$P=\frac{20090}{L+13.5}$	
	4.0 kW, 5.0 kW	$P=\frac{36848}{L+14.5}$	
MDMF (400 V)	1.0 kW(□100) to 2.0 kW	$P=\frac{19110}{L+11.5}$	
	3.0 kW	$P=\frac{34496}{L+11.5}$	
	4.0 kW to 5.0 kW	$P=\frac{42336}{L+19}$	
MGMF (400 V)	850 W to 1.8 kW	$P=\frac{26754}{L+11.5}$	
	2.4 kW to 2.9 kW	$P=\frac{63504}{L+19}$	
	4.4 kW	$P=\frac{79380}{L+19}$	
MHMF (400 V)	200 W	$P=\frac{15729}{L+46}$	
	400 W	$P=\frac{20164}{L+64}$	
	750 W	$P=\frac{34457}{L+67}$	
	1.0 kW(□80)	$P=\frac{40650}{L+83}$	
	1.0 kW(□100) to 3.0 kW	$P=\frac{22785}{L+11.5}$	
	2.0 kW to 5.0 kW	$P=\frac{42336}{L+19}$	

(Besides above, MSMF, MDMF, and MGMF have the same formula as 200 V)

MEMO

2. Preparation

1. Conformance to standards
About confomance to international standards 2-4
Composition of Peripheral Equipments..... 2-7
2. System Configuration and Wiring
List of Peripheral Equipments for Drivers 2-12
A to B-frame, 100 V/200 V type:
Overall Wiring/ Wiring of the Main Circuit/ Wiring Diagram..... 2-16
C to D-frame, 100 V/200 V type:
Overall Wiring/ Wiring of the Main Circuit/ Wiring Diagram..... 2-20
E-frame, 200 V type:
Overall Wiring/ Wiring of the Main Circuit/ Wiring Diagram..... 2-24
F-frame, 200 V type:
Overall Wiring/ Wiring of the Main Circuit/ Wiring Diagram..... 2-28
G-frame, 200 V type:
Overall Wiring/ Wiring of the Main Circuit/ Wiring Diagram..... 2-32
H-frame, 200 V type:
Overall Wiring/ Wiring of the Main Circuit/ Wiring Diagram..... 2-36
D to E-frame,400 V type:
Overall Wiring/ Wiring of the Main Circuit/ Wiring Diagram..... 2-40
F-frame, 400 V type:
Overall Wiring/ Wiring of the Main Circuit/ Wiring Diagram..... 2-44
G-frame, 400 V type:
Overall Wiring/ Wiring of the Main Circuit/ Wiring Diagram..... 2-48
H-frame, 400 V type:
Overall Wiring/ Wiring of the Main Circuit/ Wiring Diagram..... 2-52
Specifications of Motor connector 2-56
Wiring method to connector..... 2-61
3. Wiring to the connector, X1
Connecting host computer 2-63
4. Wiring to the connector, X2
Connecting communication connector..... 2-63
5. Wiring to the connector, X3
Safety function connector..... 2-65
6. Wiring to the connector, X4
Connection to Host Controller..... 2-66
7. Wiring to the connector, X5
Connect on to External Scale 2-67
8. Wiring to the connector, X6
Connection to Encoder 2-69
9. Timing Chart
Timing on power-up 2-74
Alarm 2-75
Servo-Lock 2-76
Servo-ON/OFF..... 2-77

10. Built-in Holding Brake
Outline 2-78
Specifications..... 2-79
11. Dynamic Brake
Outline 2-80
Connection Example of External Dynamic Brake Resistor 2-81
Condition setting chart 2-83
12. Setup of Parameter and Mode
Outline / Setup / Connection 2-85
Composition and List of Parameters..... 2-86
List of Parameters..... 2-87
Setup of Torque Limit 2-106
13. Setup of command division and multiplication ratio (electronic gear ratio)
Relation between Electronic Gear and Position Resolution or Traveling Speed .. 2-108
14. How to Use the Front Panel
Setup..... 2-110
Structure of Each Mode 2-112
Setup of front panel lock 2-114
Exclusive functions by operations performed by communications 2-115
Monitor Mode (SELECTION display) 2-116
Monitor Mode (EXECUTION display) 2-117
Parameter Setup Mode..... 2-131
EEPROM Writing Mode..... 2-132
Auxiliary Function Mode (SELECTION display)..... 2-133
Auxiliary Function Mode (EXECUTION display) 2-134
Software version display button 2-142

MEMO

1. Conformance to international standards

About confomance to international standards

EU Directives and UK Regulations

The AC servos meet the relevant EU Directives and UK Regulations for Low Voltage Equipment so that the machine or equipment comprising our AC servos can meet EU Directives and UK Regulations.

EU EMC Directives and UK EMC Regulations

This product can not be used to access low voltage circuit network of family facilities. If connected to the above similar circuit, high frequency wave interference may occur. To make it conform to EU EMC Directives and UK EMC Regulations, please install noise filter, surge absorber and ferrite core. Whether machine and equipment can meet EU EMC Directives and UK EMC Regulations, it is necessary for the machine and equipment loaded with servo drivers and motors.

Conformity to UL Standards

(1) Installation environment
Use the driver in an environment of Pollution Degree 2 or 1 prescribed in IEC60664-1
Make sure to install a circuit breaker(MCCB) or fuse which are UL recognized on the power supply.

Remarks Use a copper cable with temperature rating of 75 ℃ or higher.

(2) Short-Circuit Current Rating(SCCR).
This driver conform to the power source witch is less than the maximum input voltage less than 5000 A symmetrical current.

(3) The NEC (National Electric Code).
The branch circuit of the protection NEC (National Elrctrical Code) and regional standards according to the embodiment.

(4) Over-load protection and over-temperature protection
Drivers
Over-load protective function will be activated when the effective current exceeds 115 % or more than the rated current based on the time characteristics.
Motor over-temperature protection is not provided.
Motor over-load-temperature protection shall be provided at the final installation upon required by the NEC (National Electric Code).

SEMI F47

- The SEMI F47 is the standard for the semiconductor when voltage sag.
- The control voltage of driver is following the SEMI F47 stangard.
  The main voltage of driver is following the SEMI F47 standard for under no load or light load.

Caution
(1) Excluding the single-phase 100 V type .
(2) Please verify the actual compliance of your machine with the SEMI F47 standard for voltage sag immunity.

Note For rated current of circuit breaker and fuse, refer to P.2-12 “Driver and List of Applicable Peripheral Equipments”
For Overload protection time characterstics, refer to P.6-17

Conformed Standards

		Driver	Motor
EU/UK Standards	EMC	EN 55011 EN 61000-6-2 EN 61000-6-4 EN 61800-3	–
	Low-Voltage	EN 61800-5-1	EN 60034-1 EN 60034-5
	Machinery (Functional safety) *1	EN ISO 13849-1:2015 EN 61508 EN IEC 62061 EN 61800-5-2 EN 61326-3-1 IEC 60204-1	–
UL Standards		UL 61800-5-1 (E164620)	UL 1004-1, UL 1004-6 (E327868)
CSA Standards		C22.2 No.274	C22.2 No.100-04
Radio Waves Act (South Korea) (KC) *2		KN 11 KN 61000-4-2, 3, 4, 5, 6, 8, 11	—

IEC : International Electrotechnical Commission
EN : Europaischen Normen
EMC : Electromagnetic Compatibility
UL : Underwriters Laboratories
CSA : Canadian Standards Association
Servo Driver

■Authorized Representative in EU
Panasonic Marketing Europe GmbH
Panasonic Testing Centre
Winsbergring 15, 22525 Hamburg,Germany

■Authorized Representative in UK
Panasonic UK, a branch of Panasonic Marketing Europe GmbH, Maxis 2, Western Road, Bracknell, Berkshire, RG12 1RT

Safety Parameter

	Diagnosis based on EDM	No diagnosis based on EDM
Safety Integrity Level	EN 61508(SIL 3) EN IEC 62061(maximum SIL 3)	EN 61508(SIL 2) EN 62061(maximum SIL 2)
Performance level	EN ISO 13849-1 PL e (Cat.3)	EN ISO 13849-1 PL d (Cat.3)
Safety function	EN 61800-5-2 (SIL 3,STO)	EN 61800-5-2(SIL 2,STO)
Hazardous failure probability per hour	<For size A, B, C, D, E, F> PFH=1.34 × 10^{-8} (% SIL3=13.4 %) <For size G and H> PFH=1.78 × 10^{-8} (%SIL3=17.8 %)	<For size A, B, C, D, E, F> PFH=1.40 × 10^{-8} (% SIL2=14.0 %) <For size G and H> PFH=1.85 × 10^{-8} (% SIL2=18.5 %)
Average time of hazardous failure	MTTFd: High(100 years)	MTTFd: High(100 years)
Average self-diagnosis rate	DC: Medium	DC: Low
Task time	15 years	15 years

- When export this product, follow statutory provisions of the destination country.

*1 A6 series position control type and communication type don' t correspond to the functional safety standards.

*2 Information related to the Radio Waves Act (South Korea)
This servo driver is a Class A commercial electromagnetic radio wave generator not designed for home use. The user and distributor should be aware of this fact.

A 급 기기 (업무용 방송통신기자재)
이 기기는 업무용(A 급) 전자파적합기기로서 판매자
또는 사용자는 이 점을 주의하시기 바라며, 가정외의
지역에서 사용하는 것을 목적으로 합니다.

(대상기종 : Servo Driver)

This product is not an object of China Compulsory Certification (CCC).

Installation Environment

Use the servo driver in the environment of Pollution Degree 1 or 2 prescribed in IEC-60664-1 (e.g. Install the driver in control panel with IP54 protection structure.)

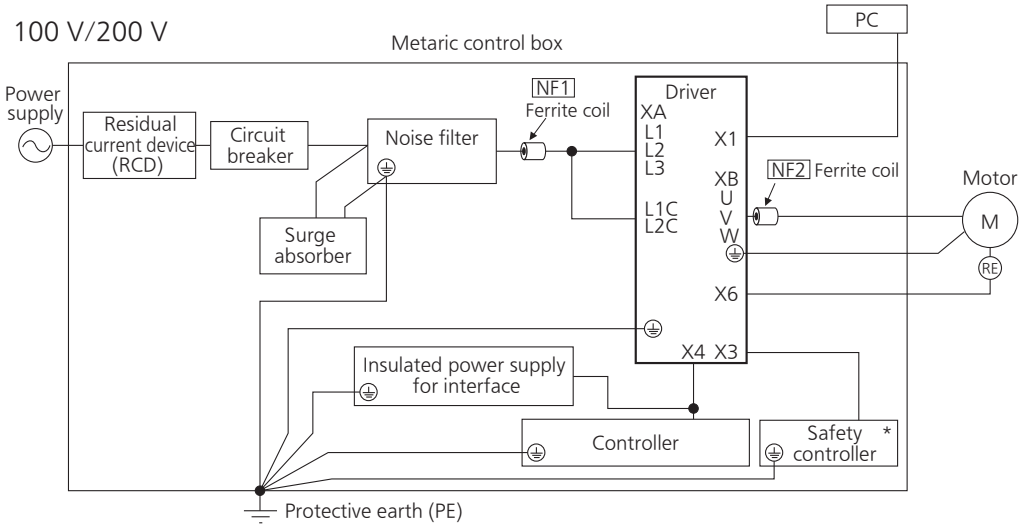

For NF1 to NF2 , refer to the Table "Ferrite coil" (P.2-5).
* The standard type and communication type are not provided with X3 terminal.

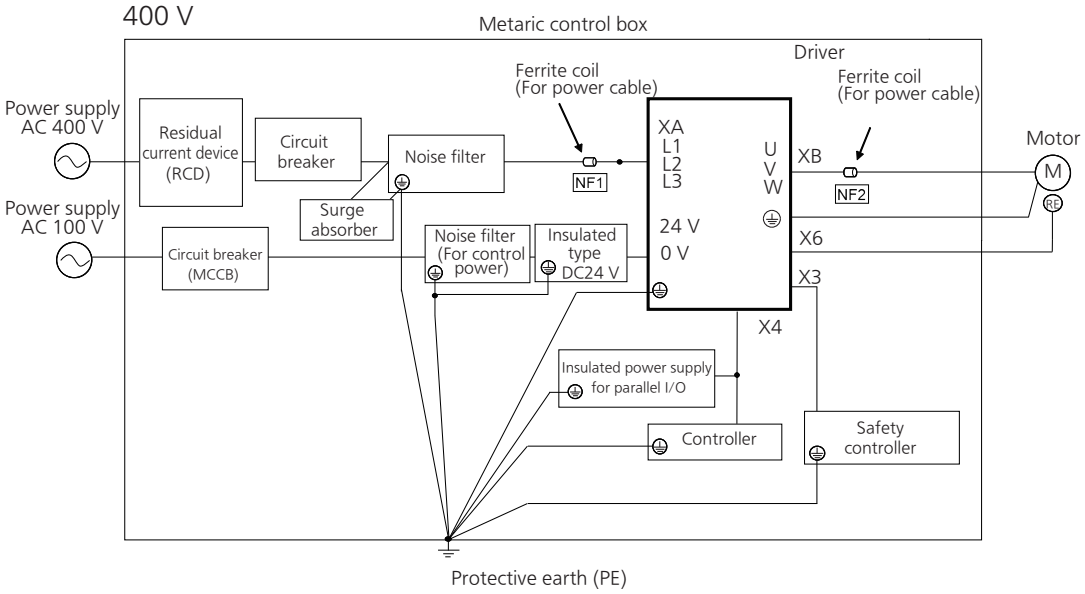

- Mandatory requirements to conform to EU EMC Directive and UK EMC Regulation
  - Install the servo driver on the metallic casing (control board).
  - Install noise filter and lightning surge absorber in the power supply line.
  - Use braided shield cable (tin plated annealed copper wire) for I/O signal cable and encoder cable.
  - Provide the noise filter, as shown in the figure, for each cable, I/O line and power source line to be connected to the servo driver.
  - Shield of cables not shown on the figure should be directly grounded through PE. Because these conditions for EU EMC Directive and UK EMC Regulation directive are affected by status of connected devices, wiring, connection and location, compliance should be checked after completing installation.

Ferrite coil

Symbol*5	Cable Name	Amp. frame symbol	Option part No.	Manufacturer's part No.	Manufacturer	Qty.
NF1	Power cable	(100 V) C (200 V) C, D, F	DV0P1460	ZCAT3035-1330	TDK Corp.	without
		(100 V) A, B (200 V) A, B, E (400 V)D,E,F				1*1
		(200 V) G, H (400 V)G,H	DV0P1460	ZCAT3035-1330		3*2
			—	RJ8095	KK-CORP.CO.JP	1*3
NF2	Motor cable	(100 V) A, B, C (200 V) A, B, C, D, E (400 V)D,E,F	DV0P1460	ZCAT3035-1330	TDK Corp.	1*1
		(200 V) F				2*4
		(200 V) G, H (400 V)G,H	DV0P1460	ZCAT3035-1330		3*2
			—	T400-61D	MICROMETALS	1*3

*1 Power wires(L1,L2,L3) should be wound together for one circle. Motor lines(U,V,W) should be wound together for one circle. 1 circle(bypass 1 line)
*2 Please wind the power wires(L1,L2,L3) for one circle separately. Please wind the motor lines(U,V,W) for one circle separately. 1 circle(bypass 1 line)
*3 Power wires(L1,L2,L3) should be wound together for four circles. Motor lines(U,V,W) should be wound together for four circles. If wires cannot be laid down by four circles, two separate ferrite coils should be used to circle two wires separately.
*4 Motor lines(U,V,W) should be wound together and bypass two ferrite coils of parallel connection. 1 circle(bypass 1 line)
*5 Refer to the "Installation Environment" structure written on P2-7 for symbols.

Remarks To connect the noise filter to the connector XB connection cable, adjust the sheath length at the tip of the cable, as required.

Caution Fix the ferrite coil in order to prevent excessive stress to the cables.

<Attaching ferrite coil>

Signal wire: Wind cables the number of turns required to form the ferrite coil.

Power wire: If sheathed (jacketed): remove the sheath (jacket) to the length so that wires (L1, L2, L3) can be wound on the ferrite coil (including power line dedicated filter). For effective noise reduction capability, L1, L2 and L3 should be wound together.
If not effective, increase the number of signal noise filters (including power line dedicated filters). (See figure below.)

Motor line: When installing the ferrite coil (including motor line dedicated filter) to our optional cable, remove the sheath (jacket) to the length so that wires can be wound on the ferrite coil (including power line dedicated filter). For effective noise reduction capability, U, V and W should be wound together.
If not effective, increase the number of ferrite coils (including power line dedicated filters). (See figure below.)

Encoder line: Wind cables the number of turns required to form the ferrite coil.

Caution Use options correctly after reading Operating Instructions of the options to better understand the precautions.
Take care not to apply excessive stress to each optional part.

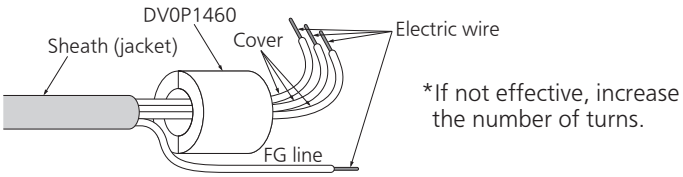

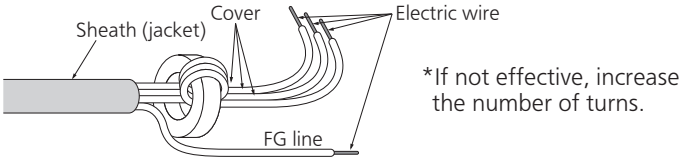

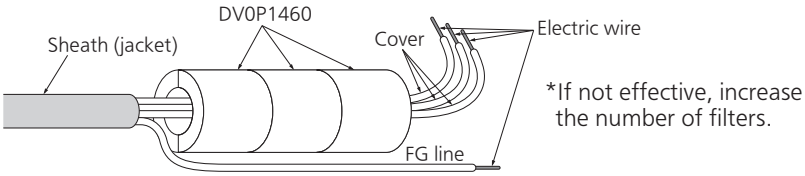

Power Supply

100 V type: (A to C-frame)	Single phase, 100 V	+10 % −15 %	to	120 V	+10 % −15 %	50 Hz/60 Hz
200 V type: (A to D-frame)	Single/3-phase, 200 V	+10 % −15 %	to	240 V	+10 % −15 %	50 Hz/60 Hz
200 V type: (E to H-frame)	3-phase, 200 V	+10 % −15 %	to	240 V	+10 % −15 %	50 Hz/60 Hz
400 V type: (E to H-frame)	Main Power 3-phase, 200 V	+10 % −15 %	to	240 V	+10 % −15 %	50 Hz/60 Hz
	Control Power DC24 V			± 15 %		

Remarks

(1) This product is designed to be used in over-voltage category (installation category) III of EN 61800-5-1:2007.

(2) Use an insulated power supply of DC12 to 24 V which has CE marking or complies with EN60950.

- Use sheathed (jacketed) cable, twisted cable or closely bundled cable for power cable.
- Power cable and signal wires must be sufficiently isolated from each other.

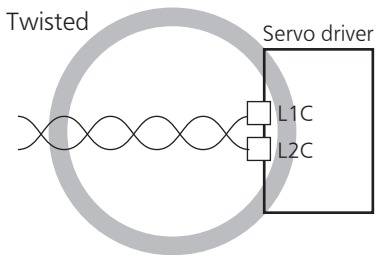

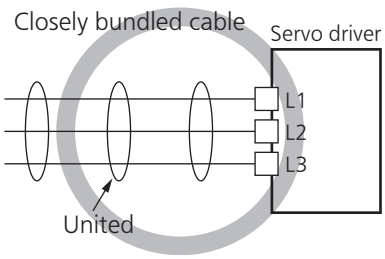

Note For driver and applicable peripheral equipments, refer to P.2-12 "Driver and List of Applicable Peripheral Equipments".

Circuit Breaker

Install a circuit breaker which complies with IEC Standards and UL recognized (Listed and Ⓤ marked) between power supply and noise filter.
The short-circuit protection circuit on the product is not for protection of branch circuit. The branch circuit should be protected in accordance with NEC and the applicable local regulations in your area.

Noise Filter

Option part No.	Voltage specifications for driver	Manufacturer' s part No.	Applicable driver (frame)	Manufacturer
DV0P4170	Single phase 100 V/200 V	SUP-EK5-ER-6	A, B-frame	Okaya Electric Ind.
DV0PM20042	3-phase 200 V	3SUP-HU10-ER-6	A, B-frame	
	Single phase 100 V/200 V3-phase 200 V		C-frame	
DV0P4220	Single/ 3-phase 200 V	3SUP-HU30-ER-6	D-frame	
DV0PM20043	3-phase 200 V	3SUP-HU50-ER-6	E-frame	
DV0P3410	3-phase 200 V	3SUP-HL50-ER-6B	F-frame	
-	3-phase 200 V	HF3080C-SZA	G-frame	Soshin Electronics Co.,Ltd
-	3-phase 200 V	HF3100C-SZA	H-frame	
-	3-phase 400 V	FN3258-16-44	D,E-frame	Schaffner EMC, Inc.
-	3-phase 400 V	FN3258-30-33	F-frame	
-	3-phase 400 V	HF-3040C-SZC	G-frame	Soshin Electronics Co.,Ltd
-	3-phase 400 V	HF-3080C-SZC	H-frame	

Remarks

- Select a noise filter whose capacity is commensurate with the pow er source capacity (in consideration of the load condition).
- For the detailed specifications of each noise filter, contact the manufacturer.
- When two or more servo drivers are used with a single noise filter at the common power source, consult with the noise filter manufacturer.
- Do not run the input and output wiring on the same passage: noise resistance will drop. (Figure at lower right)
- Isolate the input and output line from each other. (Figure at lower left)

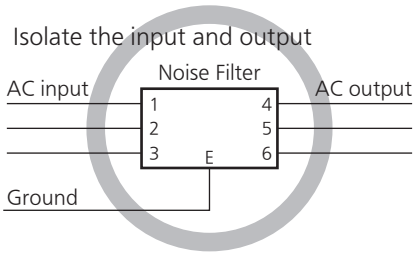

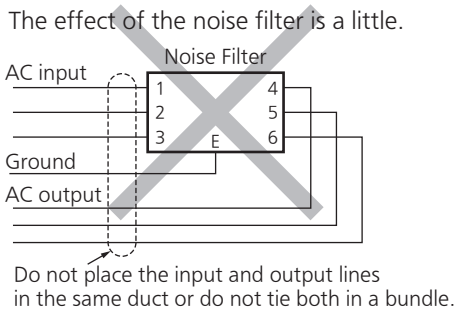

Related page • P.2-12 "Driver and List of Applicable Peripheral Equipments" • P.7-156 "Options"

Surge Absorber

Option part No.	Voltage specifications for driver	Manufacturer' s part No.	Applicable driver (frame)	Manufacturer
DV0P1450	3-phase 200 V	R・A・V-781BXZ-4	A to H-frame	Okaya Electric Ind.
-	3-phase 200 V	RSPD-250-U4	A to H-frame	
DV0P4190	Single phase 100 V/200 V	R・A・V-781BWZ-4	A to D-frame	
-	Single phase 100 V/200 V	RSPD-250-Q4	A to D-frame	
-	3-phase 400 V	LT-C34G801WS	D to F-frame	Soshin Electronics Co.,Ltd
DV0PM20050	3-phase 400 V	R・A・V-801BXZ-4	G, H-frame	Okaya Electric Ind.

Remarks When performing withstand voltage test of machine and equipment, be sure to remove the surge absorber; otherwise, it will be damaged.

Residual current device

Install a residual current device (RCD) at primary side of the power supply.
Select a RCD of type.B prescribed in IEC60947-2, JISC8201-2-2

Grounding

(1)To prevent electric shock, be sure to connect the ground terminal (⏚) of the driver, and the ground terminal (PE) of the control panel.
(2)The ground terminal (⏚) must not be shared with other equipment. Two ground terminals are provided.

Structure of control board

If there is a gap at cable inlet/outlet, mounting hole of operation panel or a door, radio waves will penetrate into or radiate out through the gap. To prevent unfavorable conditions due to radio frequency activities, observe the following control board design and selection instruction.

- The control board should be made of metal which provides electrical continuity.
- The control board should not have electrically-isolated conductor.
- All units installed in the casing should be grounded to the case.

Increasing noise resistance of control I/O signal

When noise is applied to the control input/output, it causes displacement and malfunctioning of I/O signal.

- X1 to X6 are secondary side circuit which should be isolated from the primary power source (24 VDC control power source, 24 VDC braking power source and 24 VDC for regenerative resistor). Do not connect the secondary side circuit to the primary power source and ground wire. Otherwise, I/O signal will cause error operation.
- Control power source should be completely isolated from external operating power source. Never connect the ground of the control power source to that of external power source.
- The signal line should have shield, the both end of which should be connected to the ground.

Note For driver and applicable peripheral equipments, refer to P.2-12 "Driver and List of Applicable Peripheral Equipments" .

Related page
- P.7-156 "Options"

Caution Use options correctly after reading Operating Instructions of the options to better understand the precautions.
Take care not to apply excessive stress to each optional part.

2. System Configuration and Wiring

List of Peripheral Equipments for Drivers

List of Peripheral Equipments

Driver	Voltage *1	Rated output	Required Power (at the rated load)	Circuit breaker (rated current)	Noise filter	Surge absorber	Noise filter for signal	Rated operating current of magnetic (contactor Contact configuration) *2
MADL□□□□□	Single phase, 100 V	50 W to 100 W	approx. 0.4 kVA	10 A	DV0P4170	DV0P4190 or RSPD-250-Q4	DV0P1460	20 A (3P+1a)
	Single/ 3-phase, 200 V	50 W to 200 W	approx. 0.5 kVA		DV0P4170 (Single phase) / DV0PM20042 (3-phase)	DV0P4190 or RSPD-250-Q4 (Single phase) / DV0P1450 or RSPD-250-U4 (3-phase)		
MBDL□□□□□	Single 100 V	200 W	approx. 0.5 kVA		DV0P4170	DV0P4190		
	Single/ 3-phase, 200 V	400 W	approx. 0.9 kVA		DV0P4170 (Single phase) / DV0PM20042 (3-phase)	DV0P4190 or RSPD-250-Q4 (Single phase) / DV0P1450 or RSPD-250-U4 (3-phase)		
MCDL□□□□□	Single 100 V	400 W	approx. 0.9 kVA	15 A	DV0PM20042	DV0P4190 or RSPD-250-Q4		
	Single/ 3-phase, 200 V	750 W	approx. 1.8 kVA			DV0P4190 or RSPD-250-Q4 (Single phase) / DV0P1450 or RSPD-250-U4 (3-phase)		
MDDL□□□□□	Single/ 3-phase, 200 V	1.0 kW	approx. 2.4 kVA	20 A	DV0P4220			30 A (3P+1a)
		0.9 kW	approx. 2.4 kVA					
		1.0 kW	approx. 2.4 kVA					
		1.5 kW	approx. 2.9 kVA					
MEDL□□□□□	3-phase, 200 V	2.0 kW	approx. 3.8 kVA	30 A	DV0PM20043	DV0P1450 or RSPD-250-U4	DV0P1460 RJ8035 (Recommended component) *5	60 A (3P+1a)
		2.5 kW	approx. 4.5 kVA					
MFDL□□□□□	3-phase, 200 V	2.0 kW	approx. 5.2 kVA	50 A	DV0P3410	DV0P1450 or RSPD-250-U4	DV0P1460 RJ8035 (Recommended component) *5	60 A (3P+1a)
		3.0 kW	approx. 5.2 kVA					
		4.0 kW	approx. 7.8 kVA					100 A (3P+1a)
		4.5 kW	approx. 7.8 kVA					
		5.0 kW	approx. 7.8 kVA					
MGDL□□□□□	3-phase, 200 V	5.5 kW	approx. 11 kVA	60 A	HF3080C-SZA	DV0P1450 or RSPD-250-U4	DV0P1460 RJ8095 (Recommended component) *5 T400-61D (Recommended component) *5	100 A (3P-1a)
		7.5 kW		60 A				
MHDL□□□□□	3-phase, 200 V	11.0 kW	approx. 20 kVA	100 A	HF3100C-SZA			150 A (3P-1a)
		15.0 kW		125 A				
		22.0 kW	approx. 28 kVA	160 A				200 A (3P-1a)
MDDL□□□□□	3-phase, 400 V	600 W	approx. 1.8 kVA	10 A	FN3258-16-44	LT-C34G801WS	DV0P1460	20 A (3P+1a)
		1.0 kW	approx. 2.4 kVA					
		1.5 kW	approx. 2.9 kVA					
MEDL□□□□□	3-phase, 400 V	2.0 kW	approx. 3.8 kVA	15 A				30 A (3P+1a)
MFDL□□□□□	3-phase, 400 V	3.0 kW	approx. 5.2 kVA	30 A	FN3258-30-33			60 A (3P+1a)
		5.0 kW	approx. 7.8 kVA					
MGDL□□□□□	3-phase, 400 V	7.5 kW	approx. 11 kVA	30 A	HF3040C-SZC	DV0PM20050	DV0P1460 RJ8095 (Recommended component) *5 T400-61D (Recommended component) *5	60 A (3P+1a)
MHDL□□□□□	3-phase, 400 V	15.0 kW	approx. 20 kVA	60 A	HF3080C-SZA			100 A (3P+1a)
		22.0 kW	approx. 28 kVA	100 A				

Related page Noise filter...P.7-156 Surge absorber...P.7-159
Ferrite core...P.7-160 Motor/brake connector...P.2-56

List of Applicable diameter cables

Driver	Voltage *1	Rated output	Required Power (at the rated load)	Diameter and withstand voltage of main circuit cable	Crimp terminal for main circuit terminal block	Diameter and withstand voltage of control power supply cable	Crimp terminal for control power supply terminal block	Diameter and withstand voltage of motor cable	Diameter and withstand voltage of brake cable
MADL□□□□□	Single phase, 100 V	50 W to 100 W	approx.0.4 kVA	0.75 mm²/ AWG18 600 VAC or more	Connection to exclusive connector	0.75 mm²/ AWG18 600 VAC or more	Connection to exclusive connector	0.75 mm²/ AWG18 600 VAC or more	0.28 mm²/ AWG22 to 0.75 mm²/ AWG18 100 VAC or more
	Single/ 3-phase, 200 V	50 W to 200 W	approx.0.5 kVA						
MBDL□□□□□	Single phase, 100 V	200 W	approx.0.5 kVA						
	Single/ 3-phase, 200 V	400 W	approx.0.9 kVA						
MCDL□□□□□	Single phase, 100 V	400 W	approx.0.9 kVA						
	Single/ 3-phase, 200 V	750 W	approx.1.8 kVA						
MDDL□□□□□	Single/ 3-phase, 200 V	1.0 kW	approx.2.4 kVA	2.0 mm²/ AWG14 600 VAC or more				2.0 mm²/ AWG14 600 VAC or more	0.75 mm²/ AWG18 100 VAC or more
		0.9 kW	approx.2.4 kVA						
		1.0 kW	approx.2.4 kVA						
		1.5 kW	approx.2.9 kVA						
MEDL□□□□□	3-phase, 200 V	2.0 kW	approx.3.8 kVA						
		2.4 kW	approx.4.5 kVA					3.5 mm²/ AWG12 600 VAC or more	

Note When use the external regenerative resistor of the option, use the cable with the same diameter as the main circuit cable.

Related page Noise filter...P.7-156 Surge absorber...P.7-159
Ferrite core...P.7-160 Motor/brake connector...P.2-56

List of Peripheral Equipments for Drivers

Driver	Voltage *1	Rated output	Required Power (at the rated load)	Diameter and withstand voltage of main circuit cable	Crimp terminal for main circuit terminal block	Diameter and withstand voltage of control power supply cable	Crimp terminal for control power supply terminal block	Diameter and withstand voltage of motor cable	Diameter and withstand voltage of brake cable
MFDL□□□□□	3-phase, 200 V	2.0 kW	approx. 5.2 kVA	3.5 mm²/ AWG12 600 VAC or more	11 mm or smaller ø5.3 Terminal block M5	0.75 mm²/ AWG18 600 VAC or more	11 mm or smaller ø5.3 Terminal block M5	3.5 mm²/ AWG12 600 VAC or more	0.75 mm²/ AWG18 100 VAC or more
		3.0 kW	approx. 5.2 kVA						
		4.0 kW	approx. 7.8 kVA						
		4.5 kW	approx. 7.8 kVA						
		5.0 kW	approx. 7.8 kVA						
MGDL□□□□□	3-phase, 200 V	5.5 kW	approx. 11 kVA	8.0 mm²/ AWG8			7 mm or smaller ø3.2 Terminal block M3	14 mm²/ AWG6	
		7.5 kW	approx. 11 kVA						
MHDL□□□□□	3-phase, 200 V	11.0 kW	approx. 20 kVA	22 mm²/ AWG4 600 VAC or more*3	16 mm or smaller ø6.4 Terminal block M6		0 mm or smaller Terminal block M4	22 mm²/ AWG4 600 VAC or more	
		15.0 kW	approx. 20 kVA						
		22.0 kW	approx. 28 kVA	38 mm²/ AWG2 600 VAC or more*3				38 mm²/ AWG2 600 VAC or more	
MDDL□□□□□	3-phase, 400 V	600 W	approx. 1.8kVA	2.0 mm²/ AWG14 600VAC or more	Connection to exclusive connector	0.52 mm2/ AWG20 100VAC or more	Connection to exclusive connector	2.0 mm²/ AWG14 600 VAC or more	0.75mm²/ AWG18 100VAC or more
		1.0 kW	approx. 2.4kVA						
		1.5 kW	approx. 2.9kVA						
MEDL□□□□□	3-phase, 400 V	2.0 kW	approx. 3.8kVA	2.0 mm²/ AWG14 600VAC or more	Connection to exclusive connector		Connection to exclusive connector	2.0 mm²/ AWG14 600 VAC or more	
MFDL□□□□□	3-phase, 400 V	3.0 kW	approx. 5.2kVA	3.5 mm²/ AWG12 600VAC or more	11 mm or smaller ø5.3 Terminal block M5		Connection to exclusive connector	3.5 mm²/ AWG12 600 VAC or more	
		5.0 kW	approx. 7.8kVA						
MGDL□□□□□	3-phase, 400 V	7.5 kW	approx. 11kVA	5.5 mm²/ AWG10 600VAC or more		0.75 mm²/ AWG18 100VAC or more	7 mm or smaller ø3.2 Terminal block M3	5.5 mm²/ AWG10 600 VAC or more	
MHDL□□□□□	3-phase, 400 V	15 kW	approx. 20kVA	14 mm²/ AWG6 600VAC or more*4	11 mm or smaller ø5.3 Terminal block M6		0 mm or smaller Terminal block M4	14 mm²/ AWG6 600 VAC or more	
		22 kW	approx. 28kVA	22 mm²/ AWG4 600VAC or more*4				22 mm²/ AWG4 600 VAC or more	

*1 Select peripheral equipments for single/3phase common specification according to the power source.
*2 For the external dynamic brake resistor, use the magnetic contactor with the same rating as that for the main circuit. The wire thickness for external dynamic brake resistors must be equal to or greater than the wire thickness for motors.
*3 When using the external regenerative resistor option DV0P 4285 in parallel with 6 wires, make sure that the wire thickness is equal to or greater than that of the main circuit wire applied to the rated output.
*4 When using the external regenerative resistor option DV0PM 20049 in parallel with 6 wires, make sure that the wire thickness is equal to or greater than that of the main circuit wire applied to the rated output.
*5 Use thses products to suit a standard.

- About circuit breaker and magnetic contactor

To comply to EU Directives and UK Regulations, install a circuit breaker between the power and the noise filter without fail, and the circuit breaker should conform to IEC Standards and UL recognized (Listed and UL marked).
Suitable for use on a circuit capable of delivering not more than 5,000 Arms symmetrical amperes, below the maximum input voltage of the product.

Remarks Select a circuit breaker and noise filter which match to the capacity of power supply (including a load condition).

- Terminal block and protective ground terminals
  - Use a copper conductor cables with temperature rating of 75℃ or higher.
  - The wire diameter of the ground wire must be at least 2.0 mm ² (AWG 14) for outputs of 50 W to 2.5 kW.For outputs of 3.0 kW to 5.0 kW, use at least 3.5 mm ² (AWG 12) for outputs of 7.5 kW, at least 8.0 mm ² (AWG 8) for outputs of kW, at least 22 mm² (AWG 4) for outputs of 15.0 kW, and at least 38 mm ² (AWG 2) for outputs of 22.0 kW.
  - Use the attached exclusive connector for A to E-frame, and maintain the peeled off length of 8 to 9 mm. (Refer to P.2-61)
- Fastening torque list (Terminal block screw/Terminal cover fastening screw)

Driver		Terminal block screw		Terminal cover fastening screw	
Frame	Terminal name	Nominal size	Fastening torque (N•m) Note 1	Nominal size	Fastening torque (N•m) Note 1
F	L1, L2, L3, L1C, L2C, P, RB, B, N, U, V, W	M5	1.8 to 2.0	M3	0.19 to 0.21
G	L1C, L2C	M3	0.4 to 0.6		
	L1, L2, L3, P, B, N, U, V, W	M5	2.0 to 2.4		
H	L1C, L2C, DB1, DB2	M4	0.7 to 1.0	M5	2.0 to 2.5
	L1, L2, L3, P, B, N, U, V, W	M6	2.2 to 2.5	M3	0.19 to 0.21

- Fastening torque list (Ground terminal screw/Connector to host controller (X4))

Driver frame	Terminal block screw		Connector to host controller (X4)	
	Nominal size	Fastening torque (N•m) Note 1	Nominal size	Fastening torque (N•m) Note 1
A to E	M4	1.0 to 1.2	M2.6	0.2±0.05
F to G	M5	1.8 to 2.0		
H	M6	2.4 to 2.6		

Caution Note 1
- Applying fastening torque larger than the maximum value may result in damage to the product.
- Do not turn on power without tightening all terminal block screws properly.
- Do not turn on power without tightening all terminal block screws properly, otherwise, loose contacts may generate heat (smoking, firing).
- To check for looseness, conduct periodic inspection of fastening torque once a year.

Be sure to conduct wiring properly and securely. Insecure or improper wiring may cause the motor running out of control or being damaged from overheating. In addition, pay attention not to allow conductive materials, such as wire chips, entering the driver during the installation and wiring.

Note This overall wiring diagram is a typical one. The pages that follow show wiring for specific application. The wiring indicated with the broken line shall be provided only when required.

Related page
- P.7-156... “Options”

Connecting Example of A to B-frame

- Apply the voltage designated on the nameplate from the power source. Symmetric current should be 5000 Arms or below. If the short-circuit current on the power source exceeds this value, use a current-limiting device (e.g. current-limiting fuse, current-limiting circuit breaker or transformer).

- Wiring of Main Connector (XA)

Circuit Breaker (MCCB)
To protect power supply line from overloading, install a wiring circuit breaker rated to the capacity of the power supply.

Noise Filter (NF)
Removes external noise from the power lines. And reduces an effect of the noise generated by the servo driver.

Magnetic Contactor (MC)
Turns on/off the main power of the servo driver. Use coil surge suppression units together with this.
- Never start nor stop the servo motor with this Magnetic Contactor.

Reactor (L) (to be supplied by customer)
Reduces harmonic current of the main power.

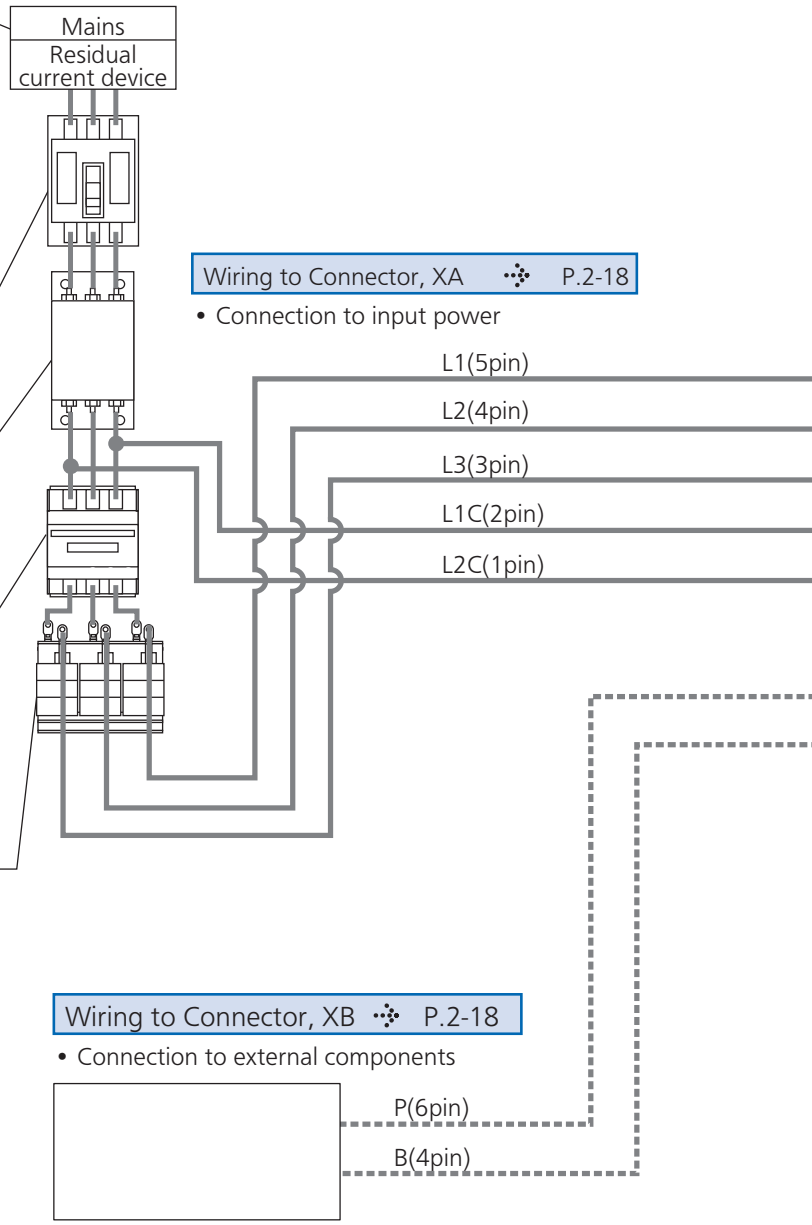

- Wiring of Motor Connector (XB)

Pin P (6-pin), B (4-pin)
- When you connect an external regenerative resistor, connect the external regenerative resistor between P and B, set up Pr0.16 to 1 or 2.

Remarks
- When you use an external regenerative resistor, install an external protective apparatus, such as thermal fuse without fail.
- Thermal fuse and thermal protector are built in to the regenerative resistor (Option). If the thermal fuse is activated, it will not resume.
- Mount the regenerative resistor on incombustible material such as metal.

Note
Note that no regenerative resistor is equipped in Frame A and B type.

Note This overall wiring diagram is a typical one. The pages that follow show wiring for specific application. The wiring indicated with the broken line shall be provided only when required.

Related page
- P.7-156 "Options"

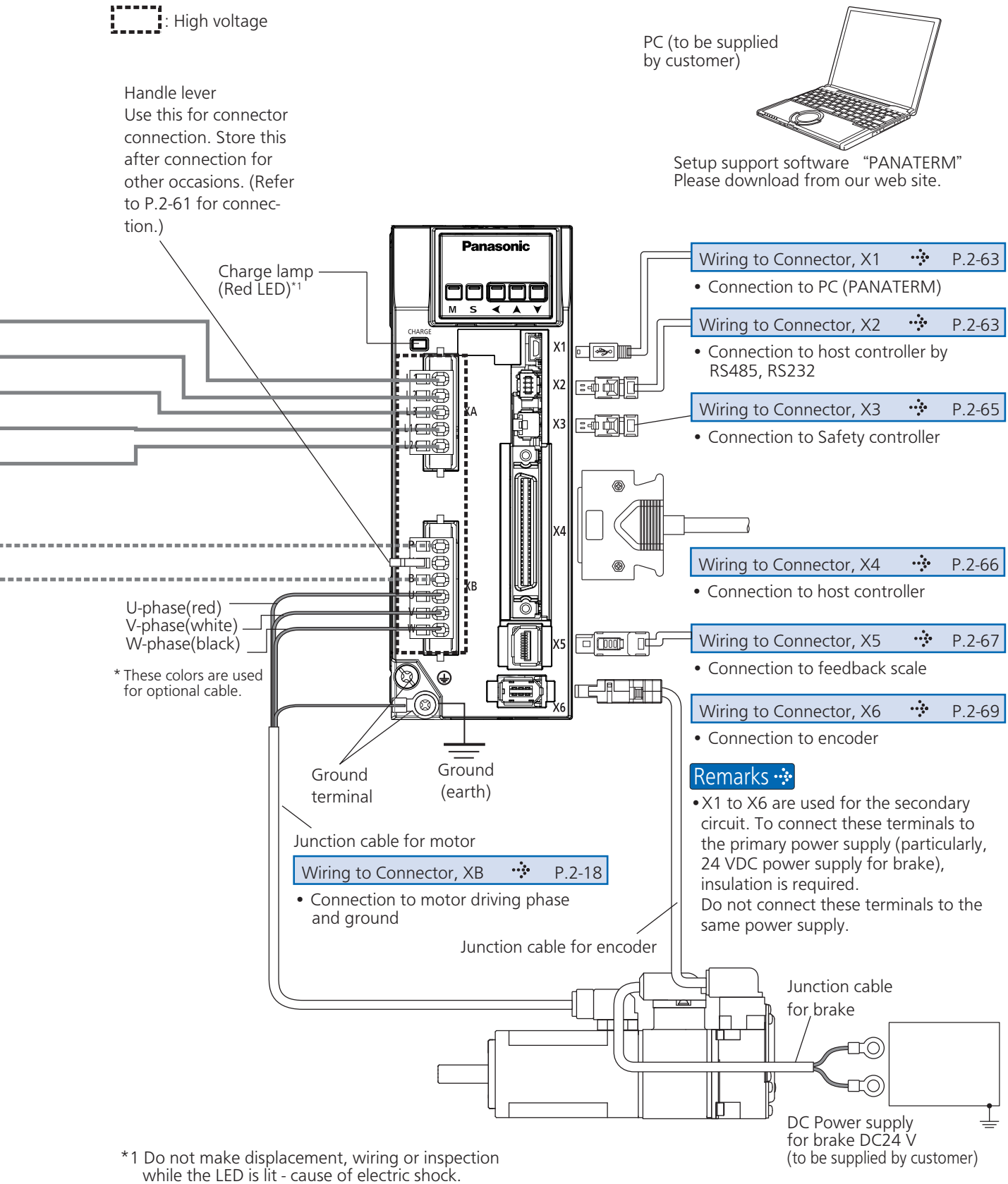

*1 Do not make displacement, wiring or inspection while the LED is lit - cause of electric shock.

A to B-frame, 100 V / 200 V type

- Wiring should be performed by a specialist or an authorized personnel.
- Do not turn on the power until the wiring is completed.
- Never touch the power connector (XA and XB) to which high voltage is applied. There is a risk of electric shock.

- Tips on Wiring

1) Wire connector (XA and XB).
2) Connect the wired connector to the driver.
   Fully insert the connector to the bottom until it clicks.

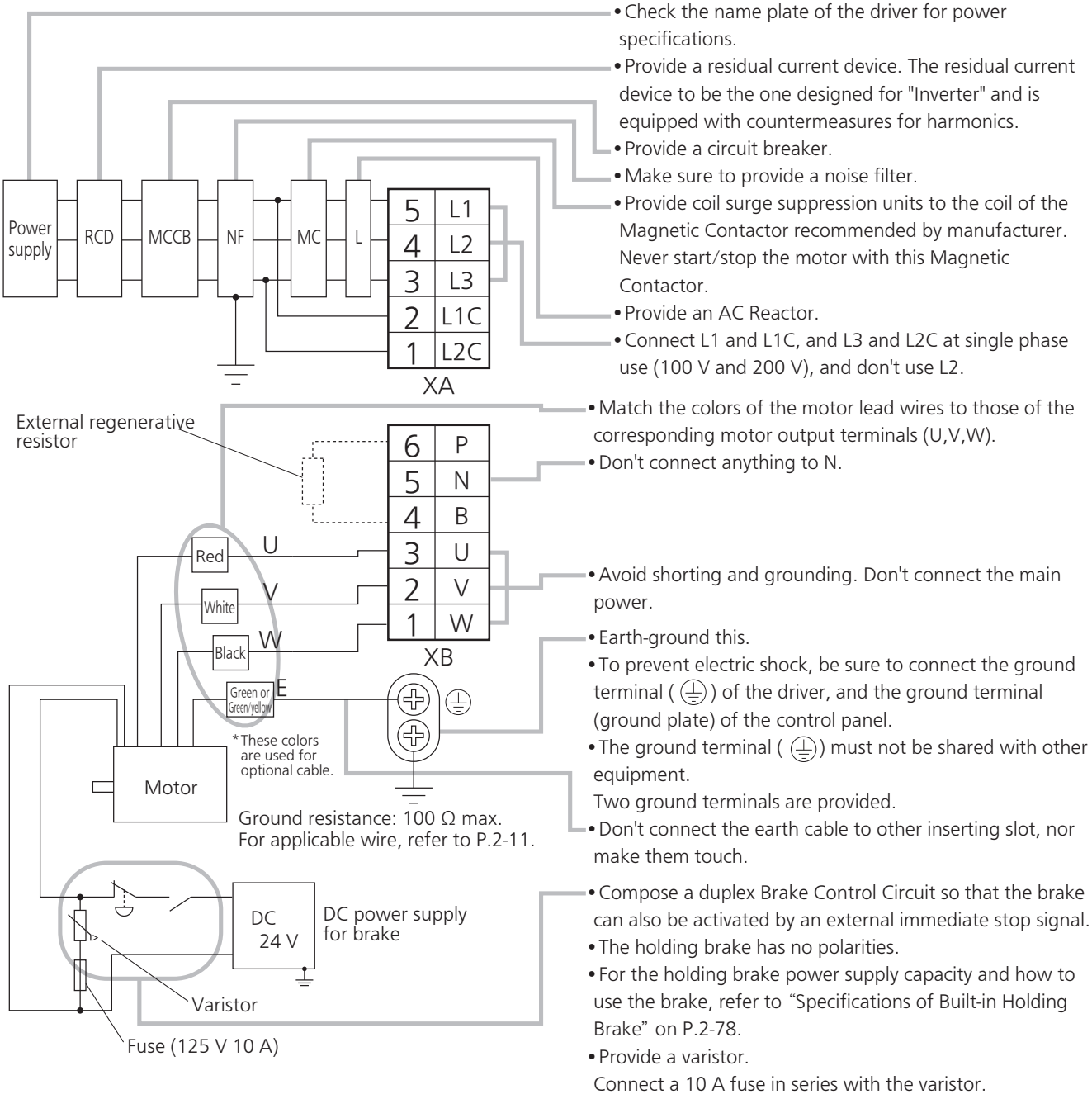

- Check the name plate of the driver for power specifications.
- Provide a residual current device. The residual current device to be the one designed for "Inverter" and is equipped with countermeasures for harmonics.
- Provide a circuit breaker.
- Make sure to provide a noise filter.
- Provide coil surge suppression units to the coil of the Magnetic Contactor recommended by manufacturer. Never start/stop the motor with this Magnetic Contactor.
- Provide an AC Reactor.
- Connect L1 and L1C, and L3 and L2C at single phase use (100 V and 200 V), and don't use L2.

- Match the colors of the motor lead wires to those of the corresponding motor output terminals (U,V,W).
- Don't connect anything to N.

- Avoid shorting and grounding. Don't connect the main power.
- Earth-ground this.
- To prevent electric shock, be sure to connect the ground terminal (⏚) of the driver, and the ground terminal (ground plate) of the control panel.
- The ground terminal (⏚) must not be shared with other equipment.
  Two ground terminals are provided.
- Don't connect the earth cable to other inserting slot, nor make them touch.

- Compose a duplex Brake Control Circuit so that the brake can also be activated by an external immediate stop signal.
- The holding brake has no polarities.
- For the holding brake power supply capacity and how to use the brake, refer to "Specifications of Built-in Holding Brake" on P.2-78.
- Provide a varistor.
  Connect a 10 A fuse in series with the varistor.

Note The wiring indicated with the broken line shall be provided only when required.

Related page
- P.2-56 "Specifications of Motor connector"
- P.2-61 "Wiring method to connector"
- P.7-176 "Connector kit "

2. System Configuration and Wiring

Wiring Diagram (A to B-frame, 100 V/200 V type)

Compose the circuit so that the main circuit power will be shut off when an error occurs. However, if you want to use "immediate stop function" and the main circuit power turns off, please be aware that you will no longer be able to use "immediate stop function" .

In Case of Single Phase, A to B-frame, 100 V / 200 V type

Power supply Single phase, 100 V −15 % to 120 V +10 % / 200 V −15 % to 240 V +10 %

• In Case of Leadwire type

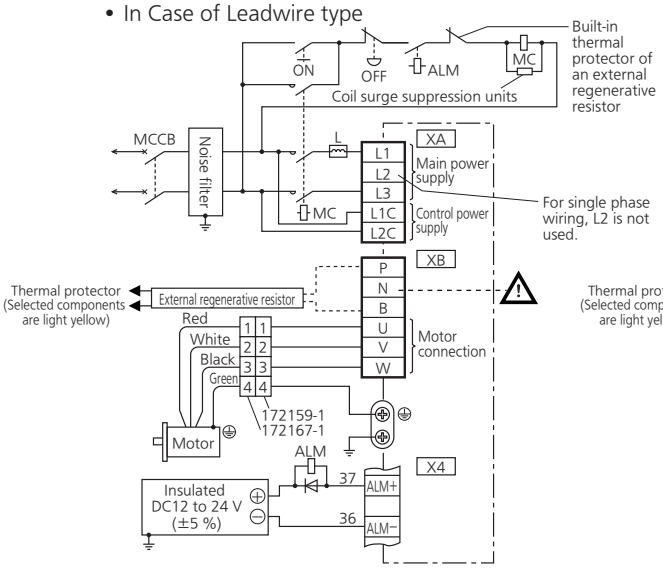

• In Case of connector type

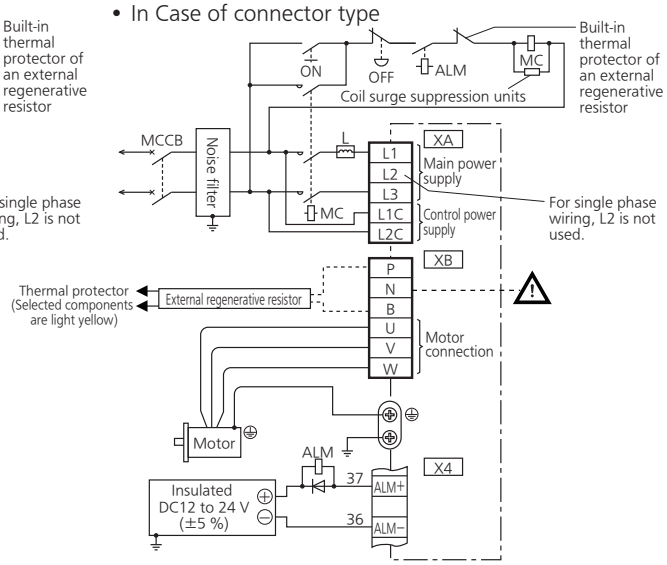

In Case of 3-Phase, A to B-frame, 200 V type

Power supply 3-phase, 200 V −15 % to 240 V +10 %

• In Case of Leadwire type

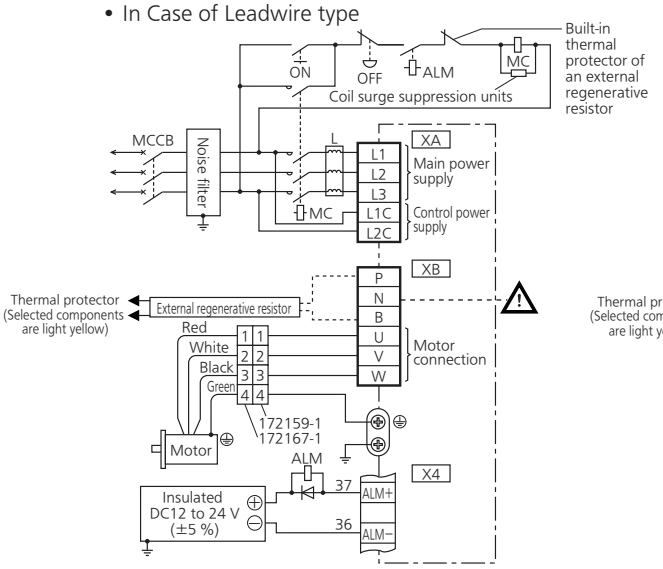

• In Case of connector type

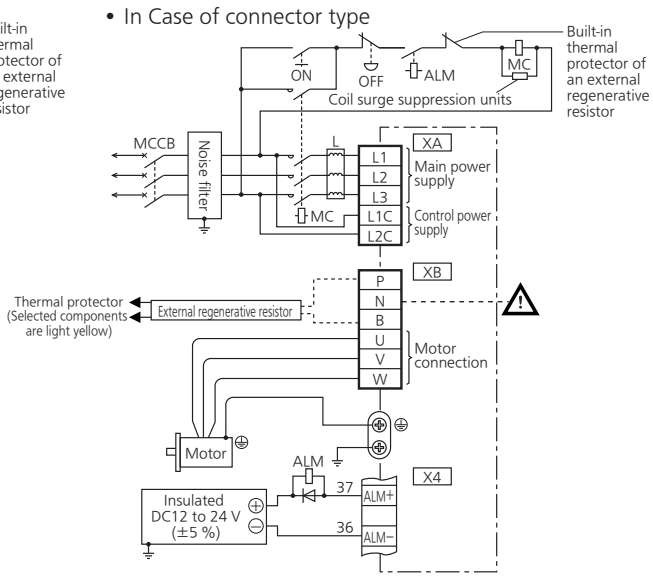

Note.1)

Frame No.	Short wire (Accessory)	Built-in regenerative resistor	Connection of the connector XB ⚠Do not connect anything to [N]	
			In case of using an external regenerative resistor.	In case of not using an external regenerative resistor.
A-frame B-frame	without	without	• Connect an external regenerative resistor between P-B	• Always open between P-B

Note The wiring indicated with the broken line shall be provided only when required.

Related page • P.2-56 "Specifications of Motor connector" • P.2-61 "Wiring method to connector"

Connecting Example of C to D-frame

- Apply the voltage designated on the nameplate from the power source.
  Symmetric current should be 5000 Arms or below.
  If the short-circuit current on the power source exceeds this value, use a current-limiting device (e.g. current-limiting fuse, current-limiting circuit breaker or transformer).

- Wiring of Main Connector (XA)
  Circuit Breaker (MCCB)
  To protect power supply line from overloading, install a wiring circuit breaker rated to the capacity of the power supply.
  Noise Filter (NF)
  Removes external noise from the power lines. And reduces an effect of the noise generated by the servo driver.
  Magnetic Contactor (MC)
  Turns on/off the main power of the servo driver. Use coil surge suppression units together with this.
  - Never start nor stop the servo motor with this Magnetic Contactor.

  Reactor (L) (to be supplied by customer)
  Reduces harmonic current of the main power.

- Wiring of Motor Connector (XB)
  Pin P (6-pin), B (4-pin), and RB (5-pin)
  - RB and B to be kept shorted for normal operation.
  - When you connect an external regenerative resistor, disconnect a short circuit wire between RB and B, then connect the external regenerative resistor between P and B, set up Pr0.16 to 1 or 2.

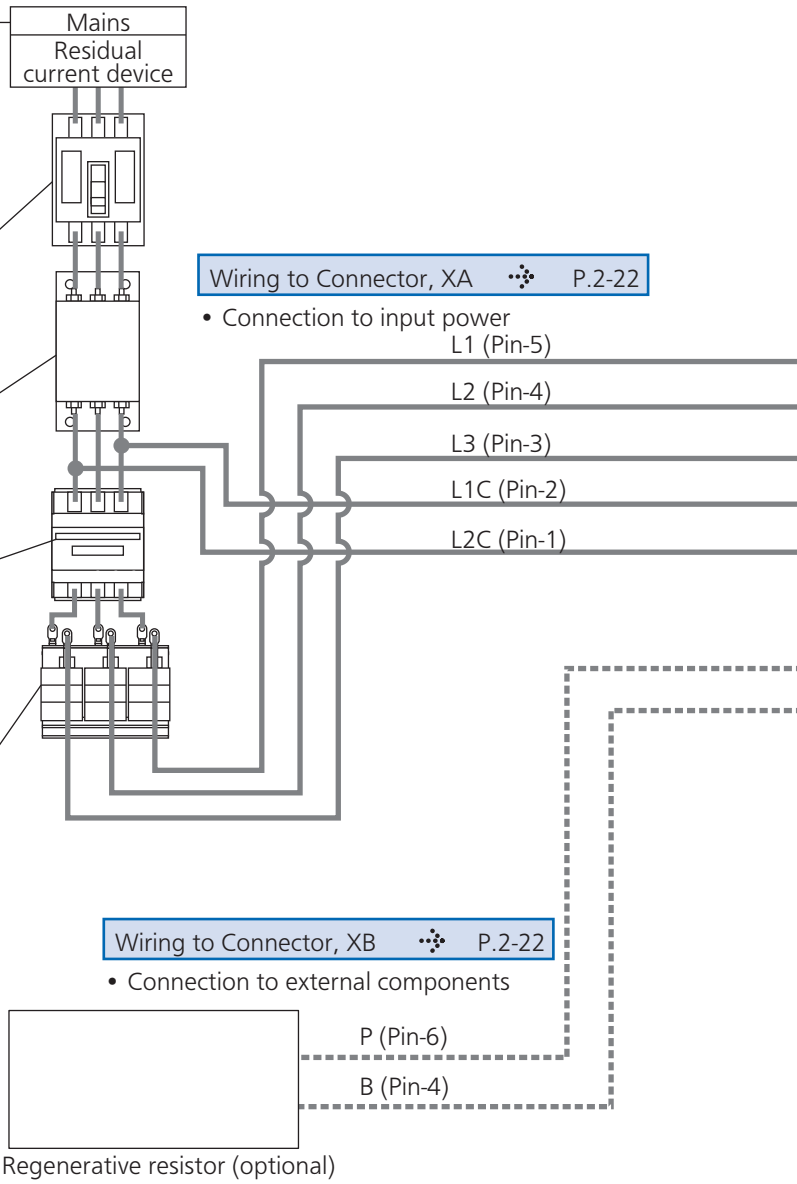

Remarks
- When you use an external regenerative resistor, install an external protective apparatus, such as thermal fuse without fail.
- Thermal fuse and thermal protector are built in to the regenerative resistor (Option). If the thermal fuse is activated, it will not resume.
- Mount the regenerative resistor on incombustible material such as metal.

Note This overall wiring diagram is a typical one. The pages that follow show wiring for specific application. The wiring indicated with the broken line shall be provided only when required.

Related page
- P.7-156 “Options”

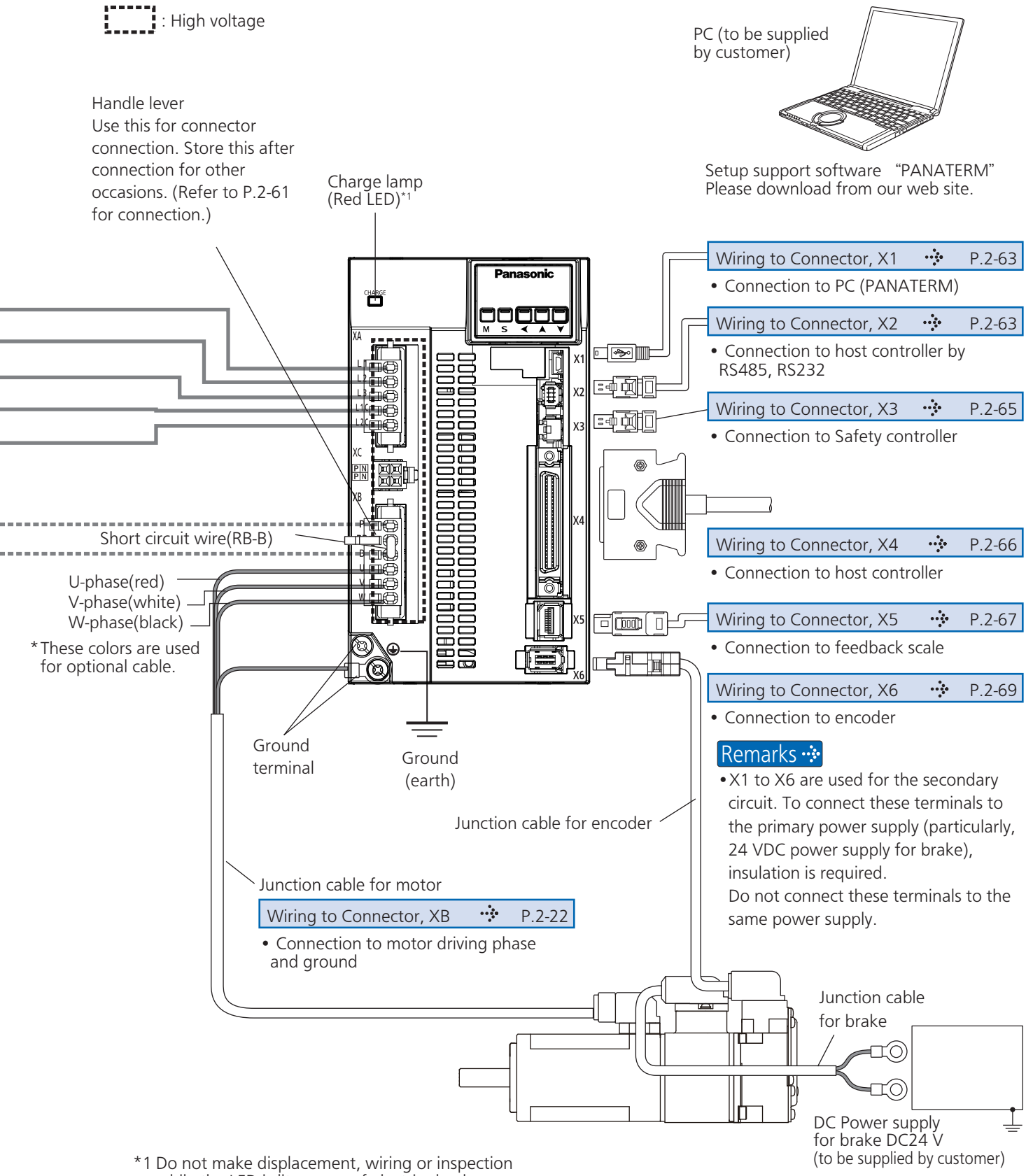

*1 Do not make displacement, wiring or inspection while the LED is lit - cause of electric shock.

Related page
- P.2-22 "Wiring of the Main Circuit (C to D-frame, 100 V/200 V type)"
- P.2-56 "Specifications of Motor connector"

URL: http://industrial.panasonic.com/ww/products/motors-compressors/fa-motors

C to D-frame, 100 V / 200 V type

- Wiring should be performed by a specialist or an authorized personnel.
- Do not turn on the power until the wiring is completed.
- Never touch the power connector (XA, XB and XC) to which high voltage is applied. There is a risk of electric shock.

- Tips on Wiring

1) Wire connector (XA and XB).
2) Connect the wired connector to the driver.
   Fully insert the connector to the bottom until it clicks.

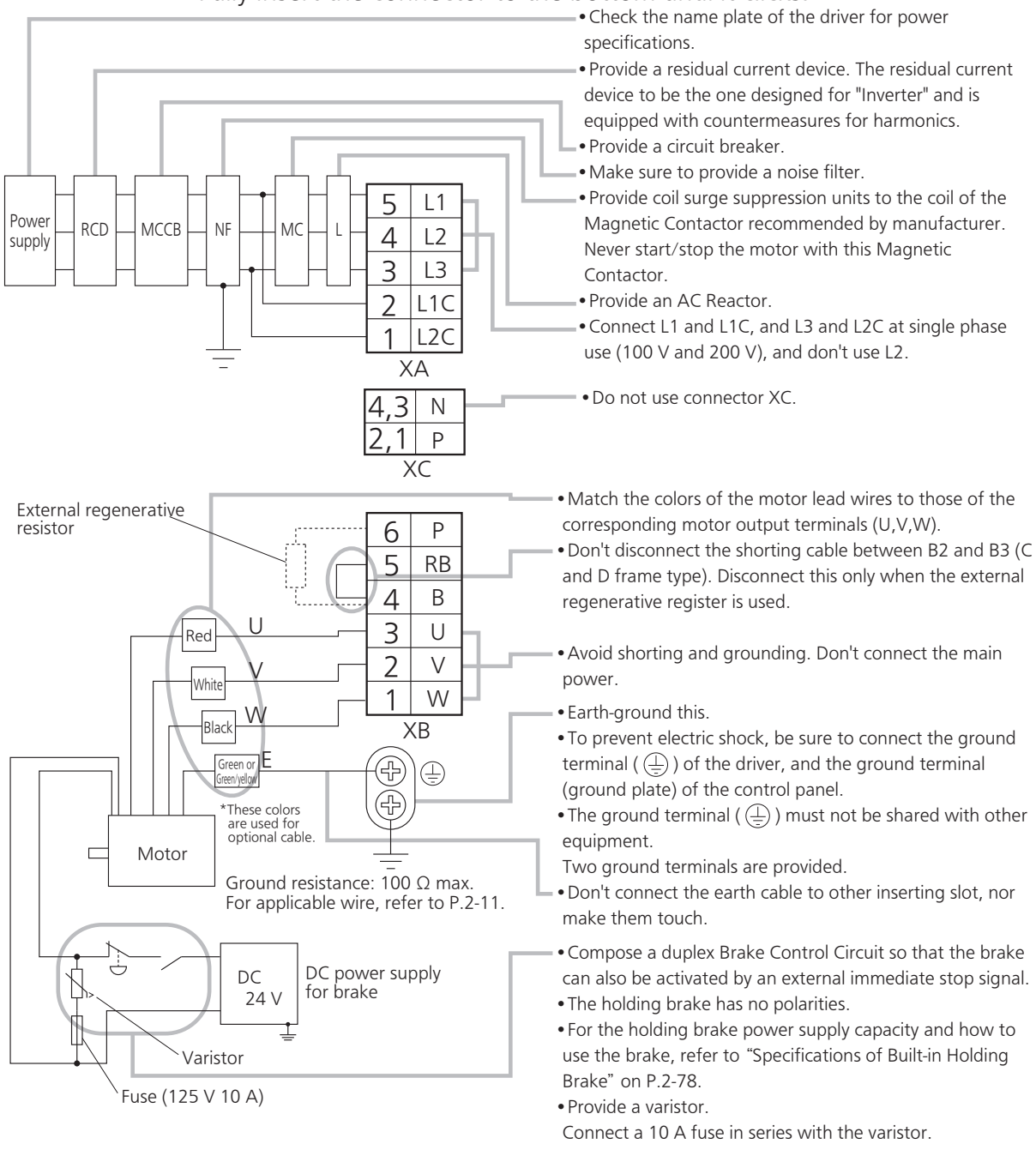

- Check the name plate of the driver for power specifications.
- Provide a residual current device. The residual current device to be the one designed for "Inverter" and is equipped with countermeasures for harmonics.
- Provide a circuit breaker.
- Make sure to provide a noise filter.
- Provide coil surge suppression units to the coil of the Magnetic Contactor recommended by manufacturer. Never start/stop the motor with this Magnetic Contactor.
- Provide an AC Reactor.
- Connect L1 and L1C, and L3 and L2C at single phase use (100 V and 200 V), and don't use L2.
- Do not use connector XC.
- Match the colors of the motor lead wires to those of the corresponding motor output terminals (U,V,W).
- Don't disconnect the shorting cable between B2 and B3 (C and D frame type). Disconnect this only when the external regenerative register is used.
- Avoid shorting and grounding. Don't connect the main power.
- Earth-ground this.
- To prevent electric shock, be sure to connect the ground terminal (⏚) of the driver, and the ground terminal (ground plate) of the control panel.
- The ground terminal (⏚) must not be shared with other equipment.
  Two ground terminals are provided.
- Don't connect the earth cable to other inserting slot, nor make them touch.
- Compose a duplex Brake Control Circuit so that the brake can also be activated by an external immediate stop signal.
- The holding brake has no polarities.
- For the holding brake power supply capacity and how to use the brake, refer to "Specifications of Built-in Holding Brake" on P.2-78.
- Provide a varistor.
  Connect a 10 A fuse in series with the varistor.

Note The wiring indicated with the broken line shall be provided only when required.

Related page
- P.2-56 "Specifications of Motor connector"
- P.2-61 "Wiring method to connector"
- P.7-176 "Connector kit"

2. System Configuration and Wiring

Wiring Diagram (C to D-frame, 100 V/200 V type)

Compose the circuit so that the main circuit power will be shut off when an error occurs. However, if you want to use "immediate stop function" and the main circuit power turns off, please be aware that you will no longer be able to use "immediate stop function" .

In Case of Single Phase, C to D-frame, 100 V / 200 V type

Power supply Single phase, 100 V −15 % to 120 V +10 % / 200 V −15 % to 240 V +10 %

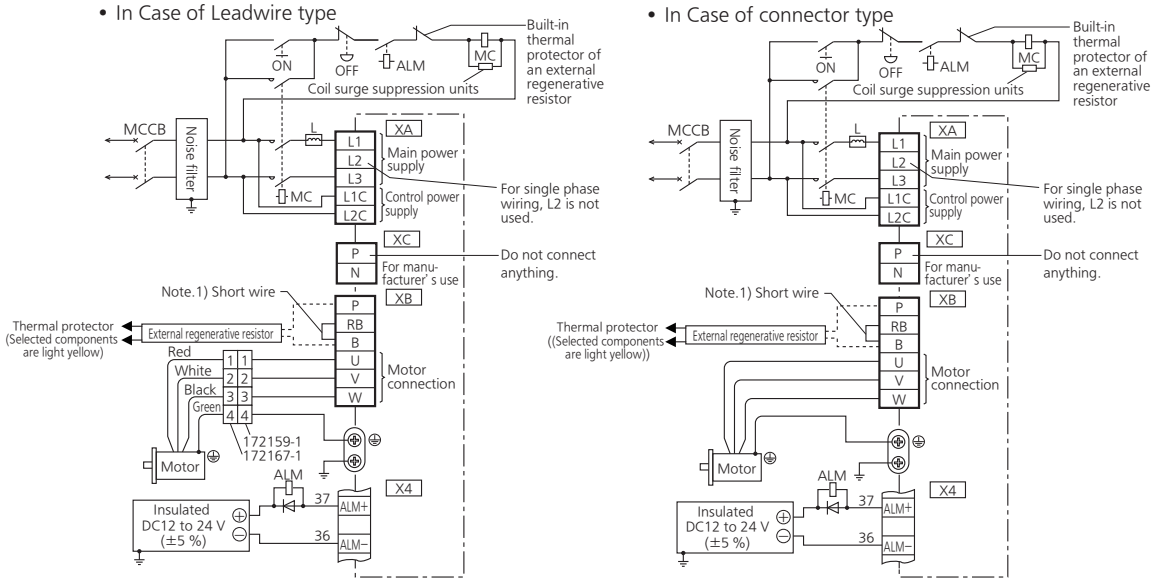

In Case of 3-Phase, C to D-frame, 200 V type

Power supply 3-phase, 200 V −15 % to 240 V +10 %

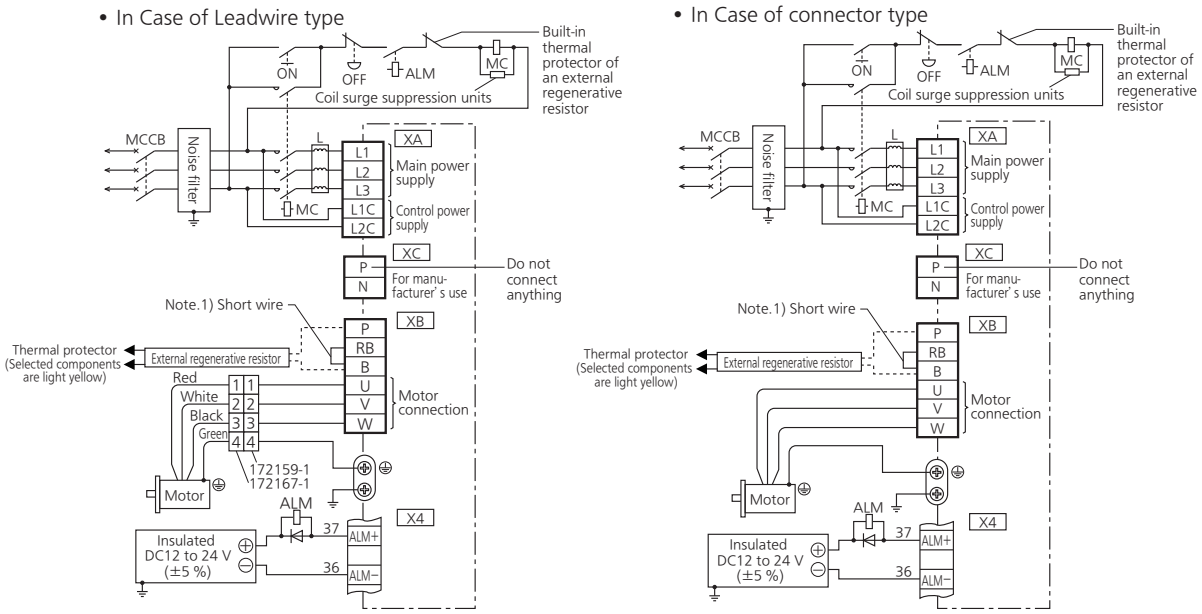

Note.1)

Frame No.	Short wire (Accessory)	Built-in regenerative resistor	Connection of the connector XB	
			In case of using an external regenerative resistor.	In case of not using an external regenerative resistor.
C-frame D-frame	with	with	• Remove the short wire accessory from between RB-B. • Connect an external regenerative resistor between P-B	• Shorted between RB-B with an attached short wire

Note The wiring indicated with the broken line shall be provided only when required.

Related page • P.2-56 "Specifications of Motor connector" • P.2-61 "Wiring method to connector"

Connecting Example of E-frame

- Apply the voltage designated on the nameplate from the power source.
  Symmetric current should be 5000 Arms or below.
  If the short-circuit current on the power source exceeds this value, use a current-limiting device (e.g. current-limiting fuse, current-limiting circuit breaker or transformer).

- Wiring of Main Connector (XA)
  Circuit Breaker (MCCB)
  To protect power supply line from overloading, install a wiring circuit breaker rated to the capacity of the power supply.
  Noise Filter (NF)
  Removes external noise from the power lines. And reduces an effect of the noise generated by the servo driver.
  Magnetic Contactor (MC)
  Turns on/off the main power of the servo driver. Use coil surge suppression units together with this.
  - Never start nor stop the servo motor with this Magnetic Contactor.

  Reactor (L) (to be supplied by customer)
  Reduces harmonic current of the main power.

- Wiring of Motor Connector (XC)
  Pin P (4-pin), RB (2-pin), and B(3-pin)
  - RB and B to be kept shorted for normal operation.
  - When you connect an external regenerative resistor, disconnect a short circuit wire between RB and B, then connect the external regenerative resistor between P and B, set up Pr0.16 to 1 or 2.

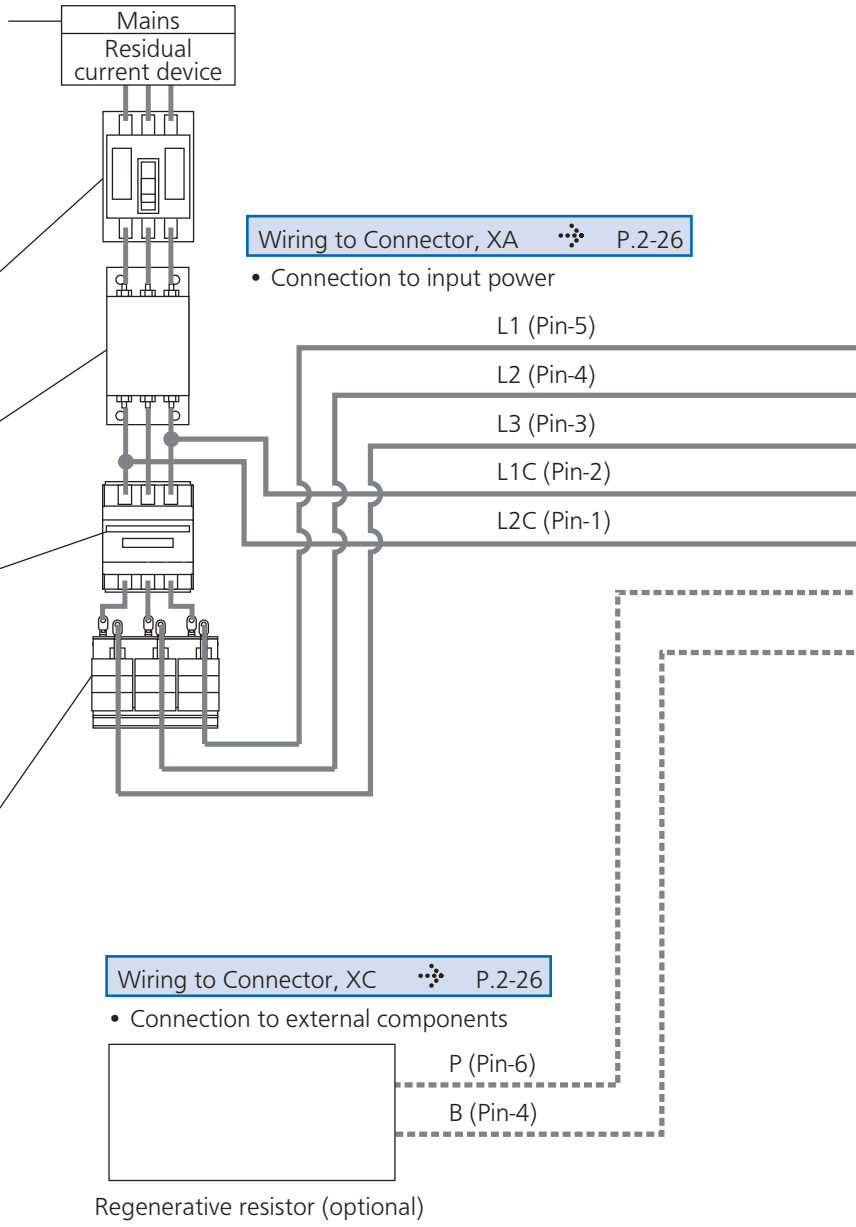

Remarks
- When you use an external regenerative resistor, install an external protective apparatus, such as thermal fuse without fail.
- Thermal fuse and thermal protector are built in to the regenerative resistor (Option). If the thermal fuse is activated, it will not resume.
- Mount the regenerative resistor on incombustible material such as metal.

Note This overall wiring diagram is a typical one. The pages that follow show wiring for specific application. The wiring indicated with the broken line shall be provided only when required.

Related page
- P.7-156 “Options”

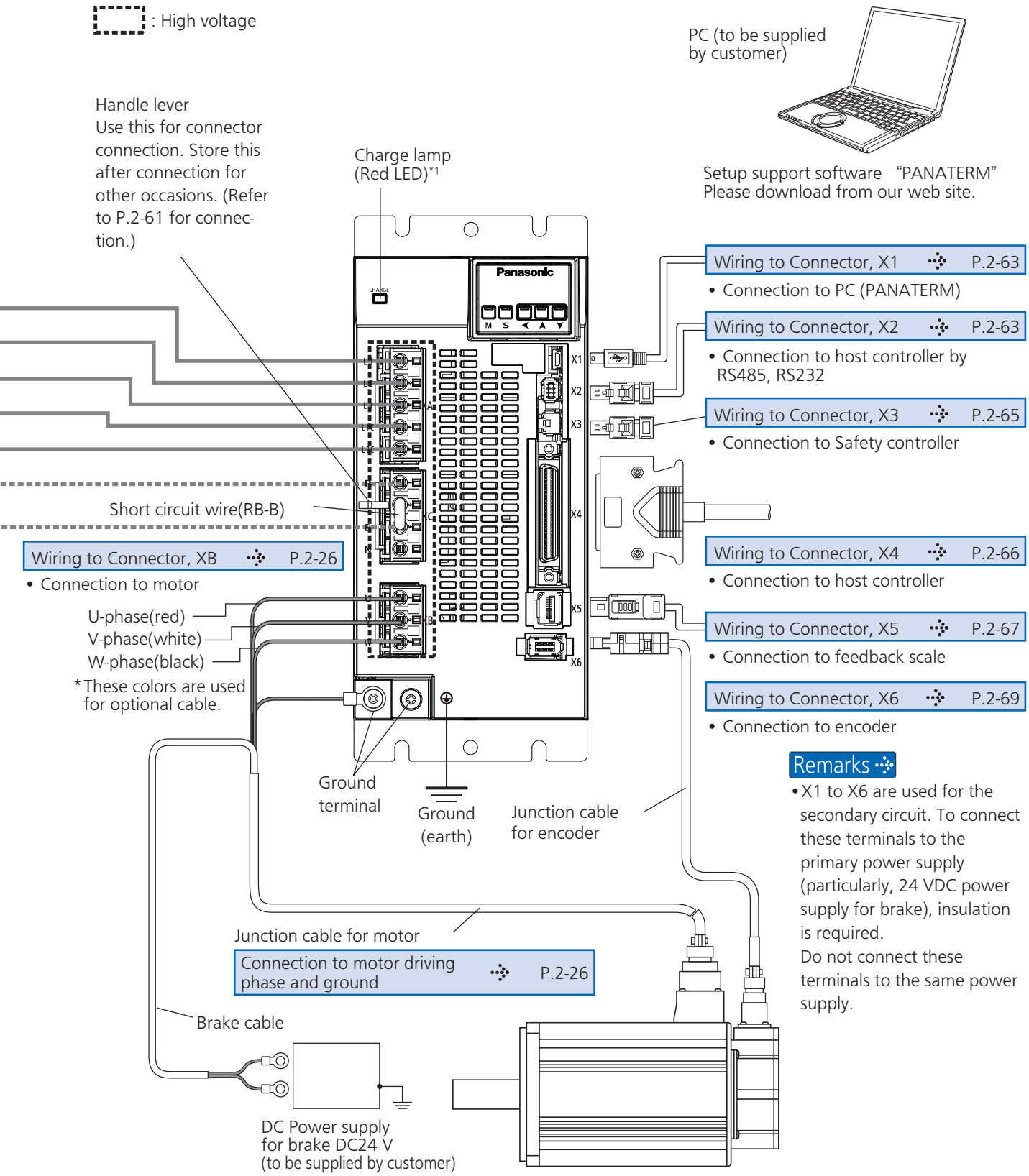

*1 Do not make displacement, wiring or inspection while the LED is lit - cause of electric shock.

Note
- The figure above shows connections on the mutifuction type.
- Only for the position control type is not provided with X2, X3 and X5.

Related page
- P.2-26 "Wiring of the Main Circuit (E-frame, 200 V type)"
- P.2-56 "Specifications of Motor connector"

URL: http://industrial.panasonic.com/ww/products/motors-compressors/fa-motors

E-frame, 200 V type

- Wiring should be performed by a specialist or an authorized personnel.
- Do not turn on the power until the wiring is completed.
- Never touch the power connector (XA, XB and XC) to which high voltage is applied. There is a risk of electric shock.

- Tips on Wiring

1) Wire connector (XA, XB and XC).
2) Connect the wired connector to the driver.
   Fully insert the connector to the bottom until it clicks.

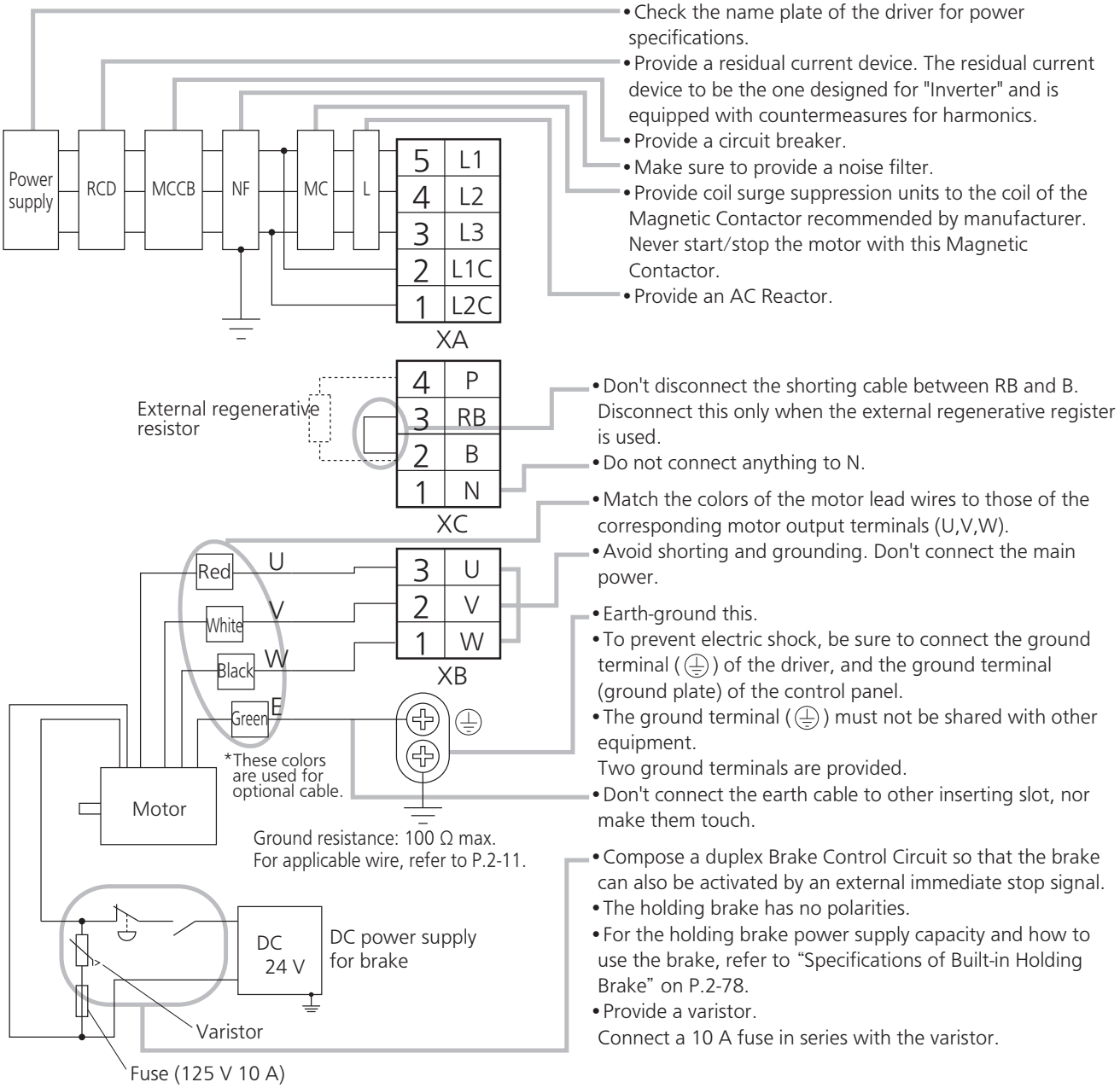

Note The wiring indicated with the broken line shall be provided only when required.

Related page
- P.2-56 "Specifications of Motor connector"
- P.2-61 "Wiring method to connector"
- P.7-176 "Connector kit"

2. System Configuration and Wiring

Wiring Diagram (E-frame, 200 V type)

Compose the circuit so that the main circuit power will be shut off when an error occurs. However, if you want to use "immediate stop function" and the main circuit power turns off, please be aware that you will no longer be able to use "immediate stop function" .

In Case of 3-Phase, E-frame, 200 V type

Power supply 3-phase, 200 V −15 % to 240 V +10 %

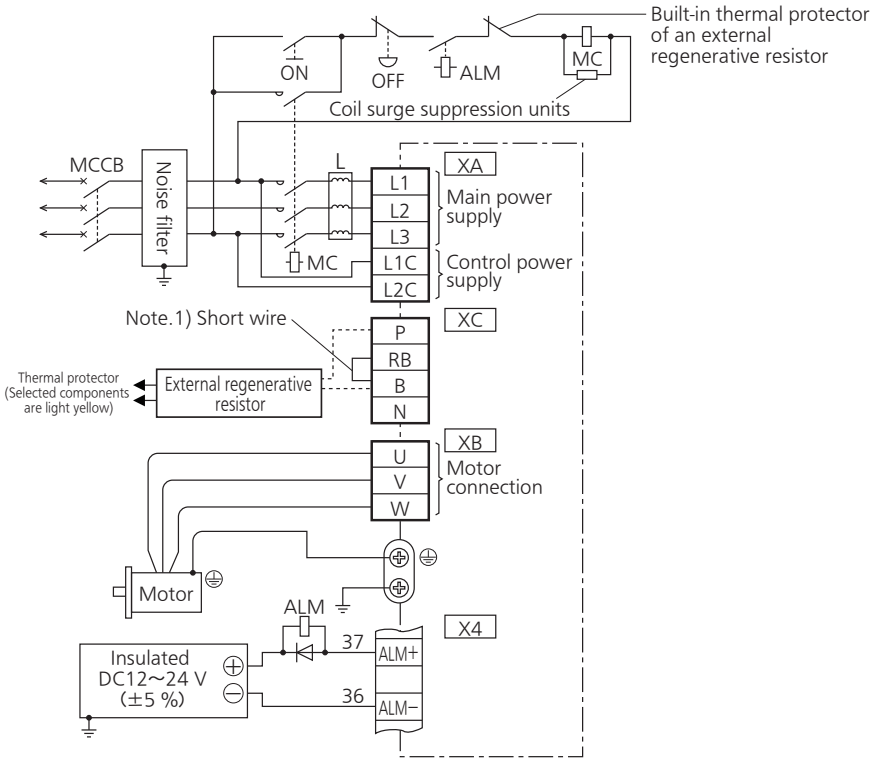

Note.1)

Frame No.	Short wire (Accessory)	Built-in regenerative resistor	Connection of the connector XC	
			In case of using an external regenerative resistor.	In case of not using an external regenerative resistor.
E-frame	with	with	• Remove the short wire accessory from between RB-B. • Connect an external regenerative resistor between P-B.	• Shorted between RB-B with an attached short wire

Note The wiring indicated with the broken line shall be provided only when required.

Related page • P.2-56 "Specifications of Motor connector" • P.2-61 "Wiring method to connector"

Connecting Example of F-frame

- Apply the voltage designated on the nameplate from the power source.
  Symmetric current should be 5000 Arms or below.
  If the short-circuit current on the power source exceeds this value, use a current-limiting device (e.g. current-limiting fuse, current-limiting circuit breaker or transformer).

- Wiring of Main Circuit Circuit Breaker (MCCB)
  To protect power supply line from overloading, install a wiring circuit breaker rated to the capacity of the power supply.

Noise Filter (NF)
Removes external noise from the power lines. And reduces an effect of the noise generated by the servo driver.

Magnetic Contactor (MC)
Turns on/off the main power of the servo driver. Use coil surge suppression units together with this.
- Never start nor stop the servo motor with this Magnetic Contactor.

Reactor (L) (to be supplied by customer)
Reduces harmonic current of the main power.

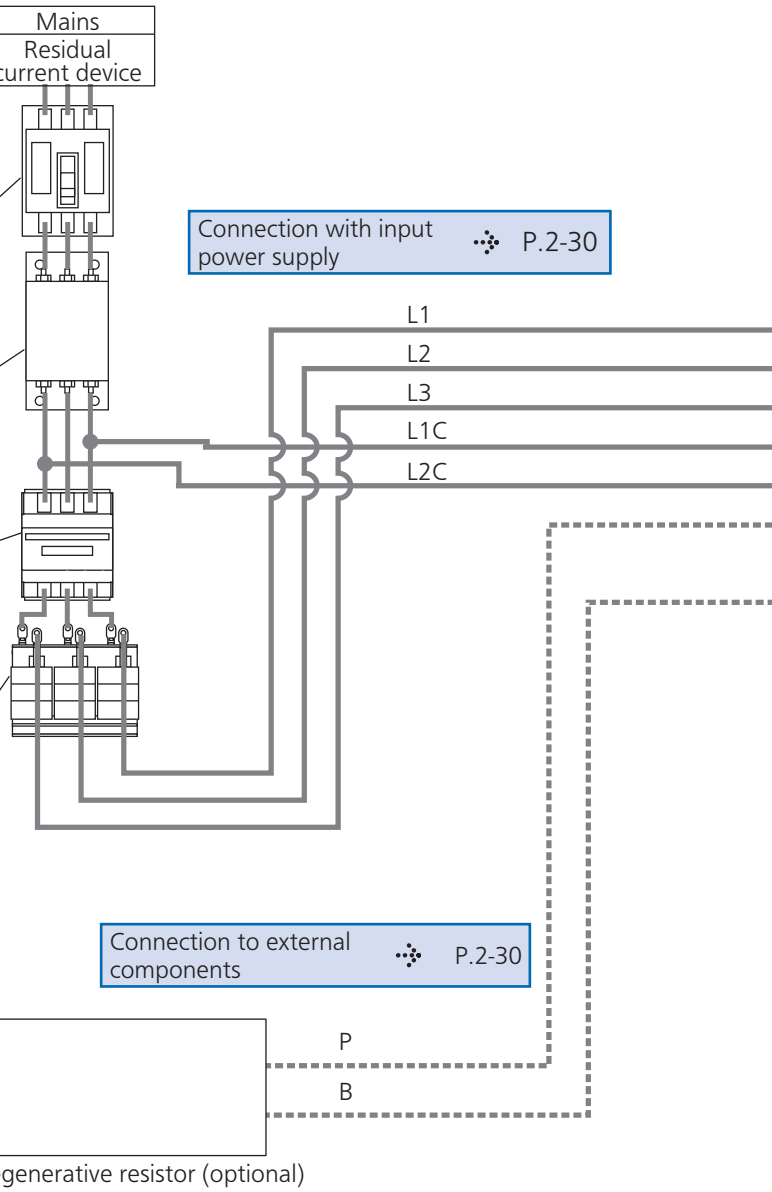

Pin P, RB and B
- RB and B to be kept shorted for normal operation.
- When you connect an external regenerative resistor, disconnect a short bar between RB and B, then connect the external regenerative resistor between P and B, set up Pr0.16 to 1 or 2.

Pin N
- Do not connect anything.

Remarks
- When you use an external regenerative resistor, install an external protective apparatus, such as thermal fuse without fail.
- Thermal fuse and thermal protector are built in to the regenerative resistor (Option). If the thermal fuse is activated, it will not resume.
- Mount the regenerative resistor on incombustible material such as metal.

Note This overall wiring diagram is a typical one. The pages that follow show wiring for specific application. The wiring indicated with the broken line shall be provided only when required.

Related page
- P.7-156 “Options”

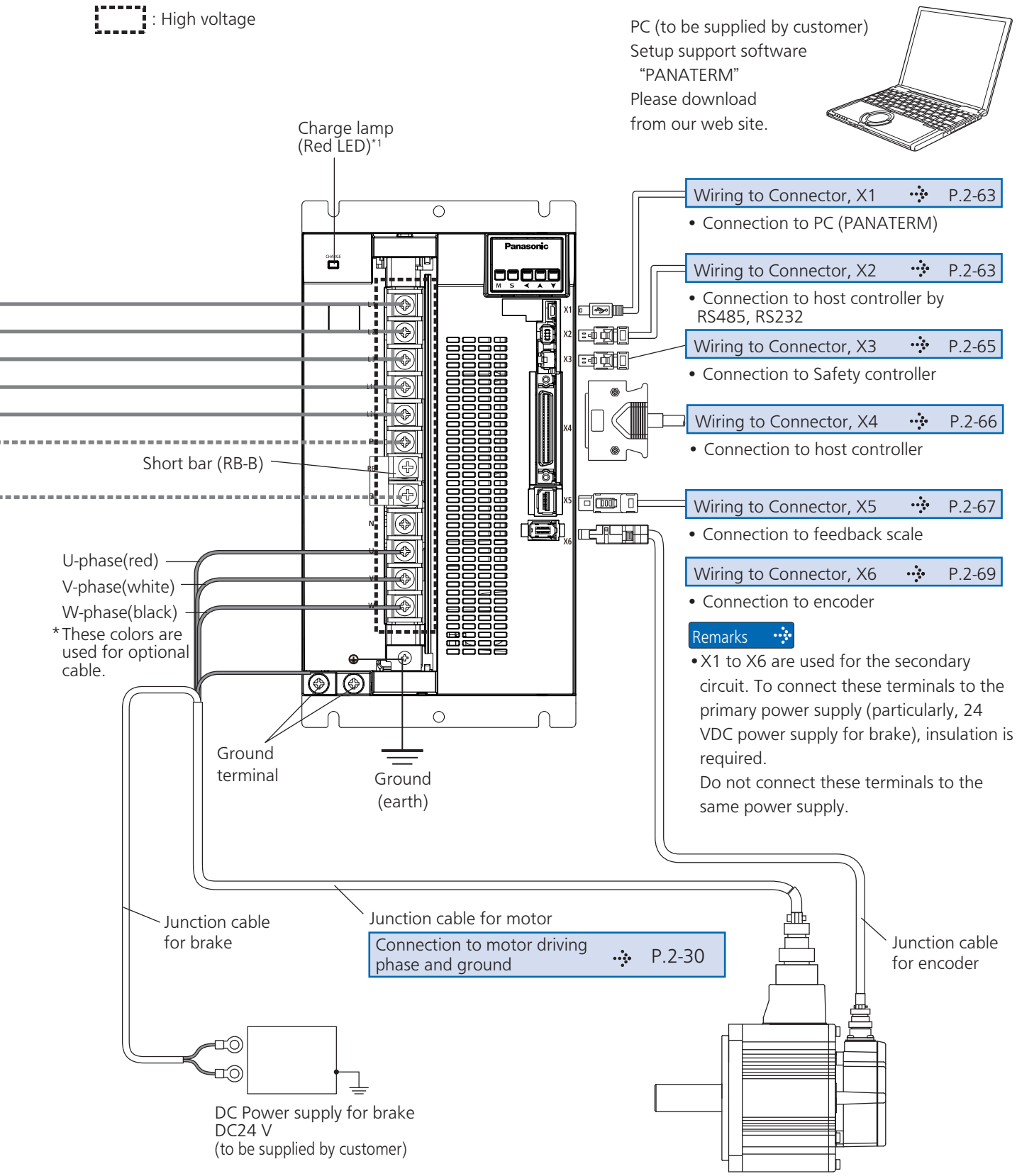

*1 Do not make displacement, wiring or inspection while the LED is lit - cause of electric shock.

Related page
• P.2-30 "Wiring of the Main Circuit (F-frame, 200 V type)"
• P.2-56 "Specifications of Motor connector"
URL: http://industrial.panasonic.com/ww/products/motors-compressors/fa-motors

F-frame, 200 V type

- Wiring should be performed by a specialist or an authorized personnel.
- Do not turn on the power until the wiring is completed.
- Never touch the terminal to which high voltage is applied. There is a risk of electric shock.

- Tips on Wiring

1) Take off the cover fixing screws, and detach the terminal cover.
2) Make wiring
   Use clamp type terminals of round shape with insulation cover for wiring to the terminal block. For cable diameter and size, reter to "Driver and List of Applicable Peripheral Equipments" (P.2-10).
   Tighten the terminal block screw with a torque written on P2-13.
3) Attach the terminal cover, and fix with screws.
   Tighten the screw securing the cover with a torque written on P.2-13.

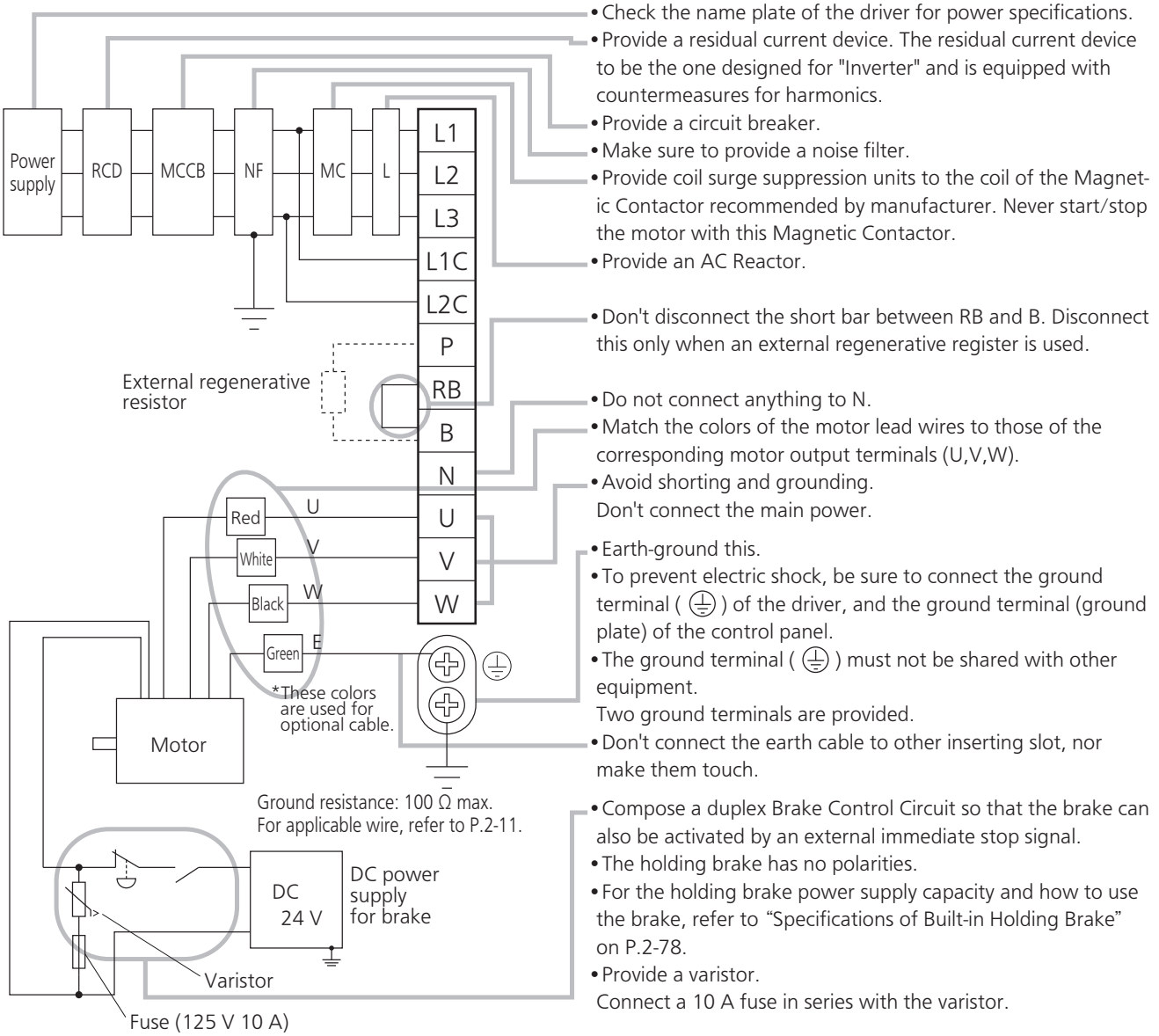

Note The wiring indicated with the broken line shall be provided only when required.

Related page
- P.2-56 "Specifications of Motor connector"

2. System Configuration and Wiring

Wiring Diagram (F-frame, 200 V type)

Compose the circuit so that the main circuit power will be shut off when an error occurs. However, if you want to use "immediate stop function" and the main circuit power turns off, please be aware that you will no longer be able to use "immediate stop function" .

In Case of 3-Phase, F-frame, 200 V type

Power supply 3-phase, 200 V −15 % to 240 V +10 %

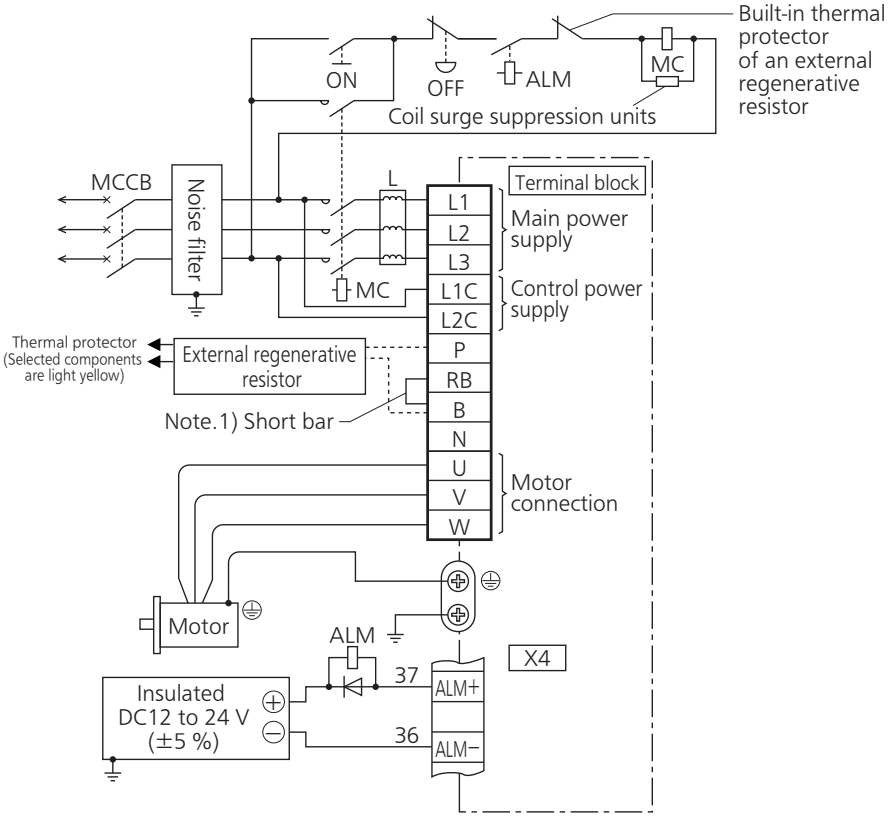

Note.1)

Frame No.	Short bar (Accessory)	Built-in regenerative resistor	Connection of terminal block	
			In case of using an external regenerative resistor.	In case of not using an external regenerative resistor.
F-frame	with	with	• Remove the short bar accessory from between RB-B. • Connect an external regenerative resistor between P-B.	• Shorted between RB-B with an attached short bar

Note The wiring indicated with the broken line shall be provided only when required.

Related page • P.2-56 "Specifications of Motor connector"

Connecting Example of G-frame

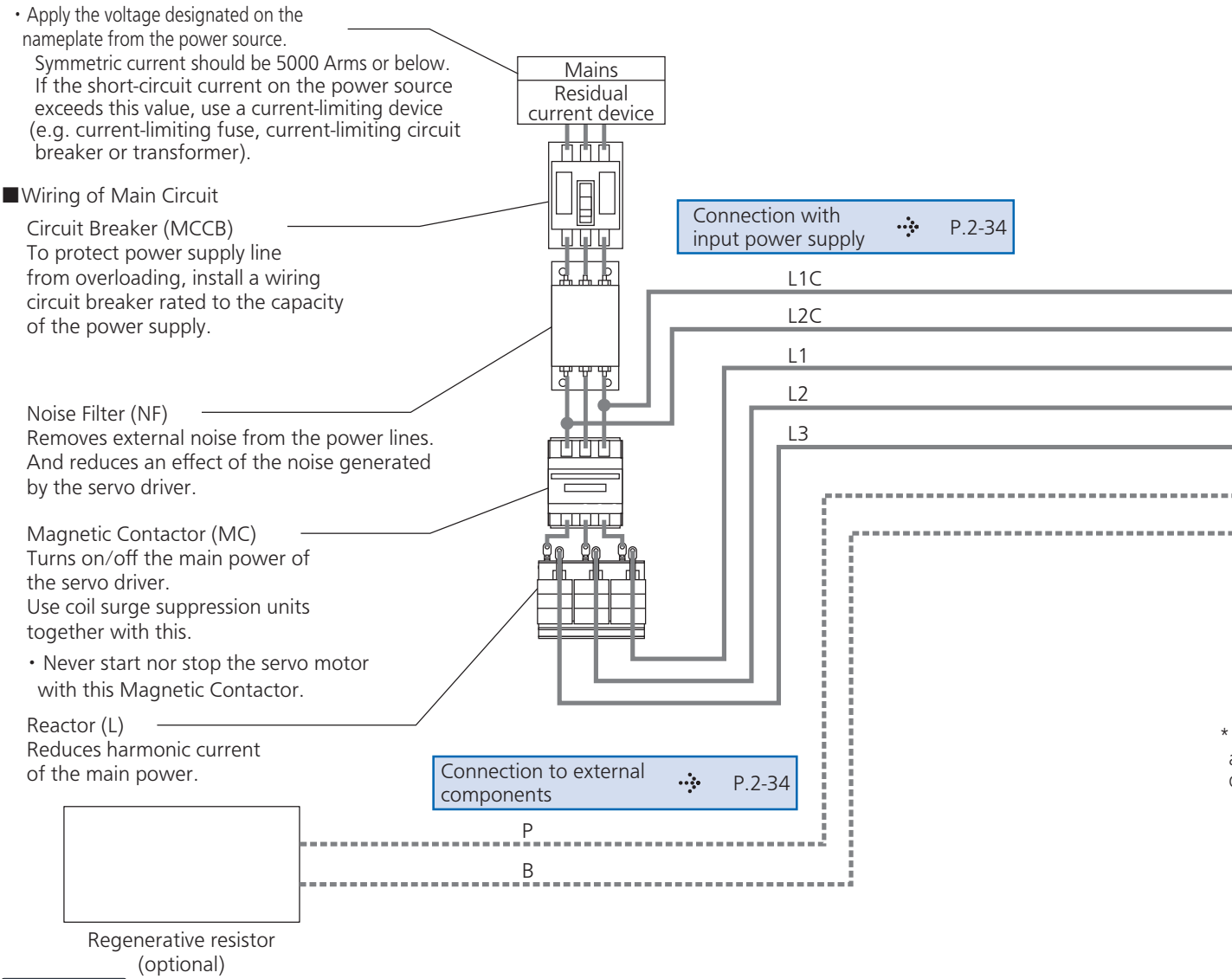

Remarks

- When you use an external regenerative resistor and dynamic brake, install an external protective apparatus, such as thermal fuse.
- Thermal fuse and thermal protector are built in to the regenerative resistor (Option). If the thermal fuse is activated, it will not resume.
- Mount the regenerative resistor and dynamic brake on incombustible material such as metal.

Note This overall wiring diagram is a typical one. The pages that follow show wiring for specific application. The wiring indicated with the broken line shall be provided only when required.

Related page
• P.7-156 “Options”

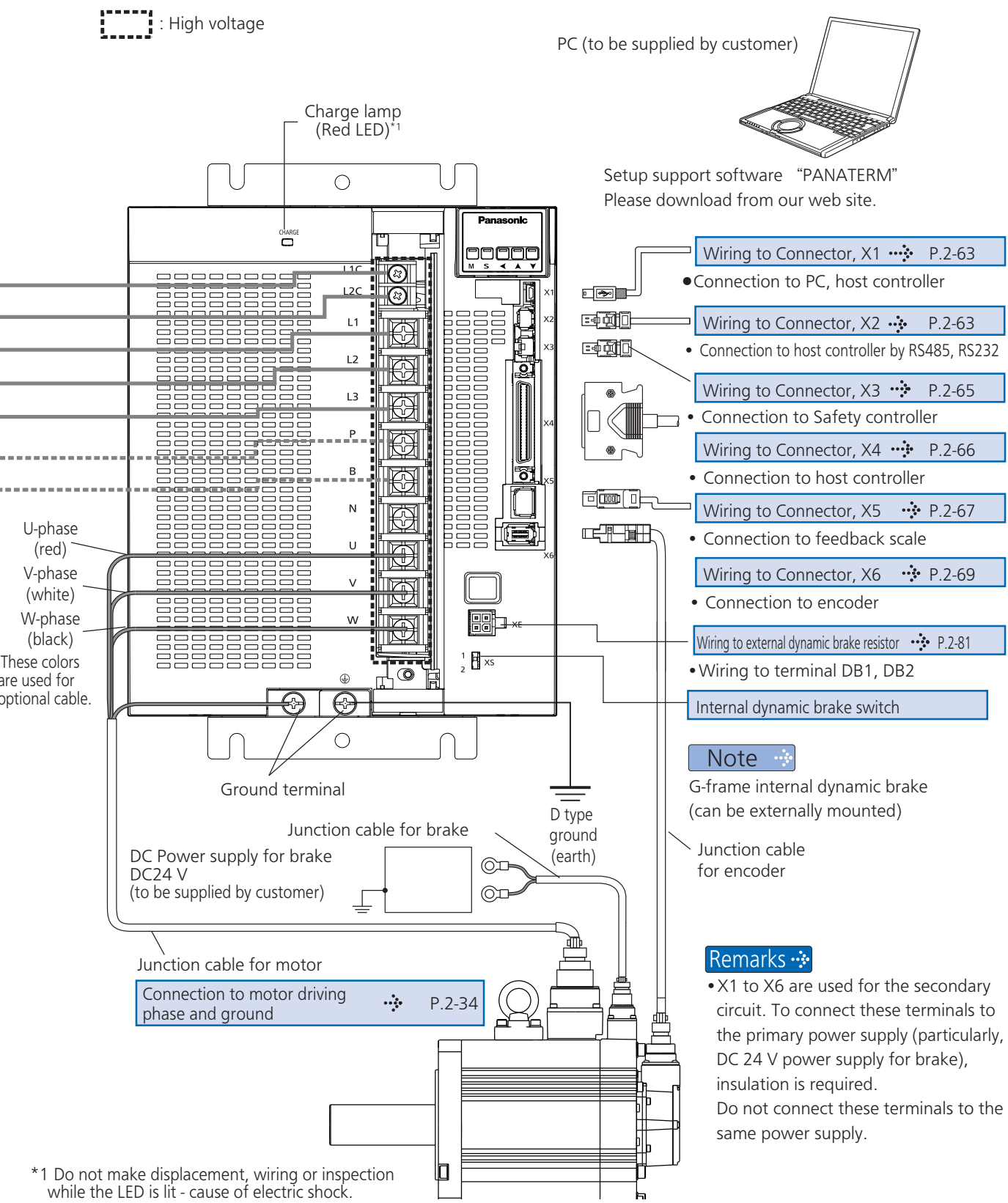

*1 Do not make displacement, wiring or inspection while the LED is lit - cause of electric shock.

Related page
• P.2-34 "Wiring of the Main Circuit (G-frame, 200 V type)"
• P.2-56 "Specifications of Motor connector"
URL: http://industrial.panasonic.com/ww/products/motors-compressors/fa-motors

G-frame, 200 V type

- Wiring should be performed by a specialist or an authorized personnel.
- Do not turn on the power until the wiring is completed.
- Never touch the terminal to which high voltage is applied. There is a risk of electric shock.

- Tips on Wiring

1) Take off the cover fixing screws, and detach the terminal cover.
2) Use clamp type terminals of round shape with insulation cover for wiring to the terminal block. For cable diameter and size, reter to “Driver and List of Applicable Peripheral Equipments” (P.2-10).
   Tighten the terminal block screw with a torque written on P2-13.
3) Attach the terminal cover, and fix with screws.
   Tighten the screw securing the cover with a torque written on P.2-13.

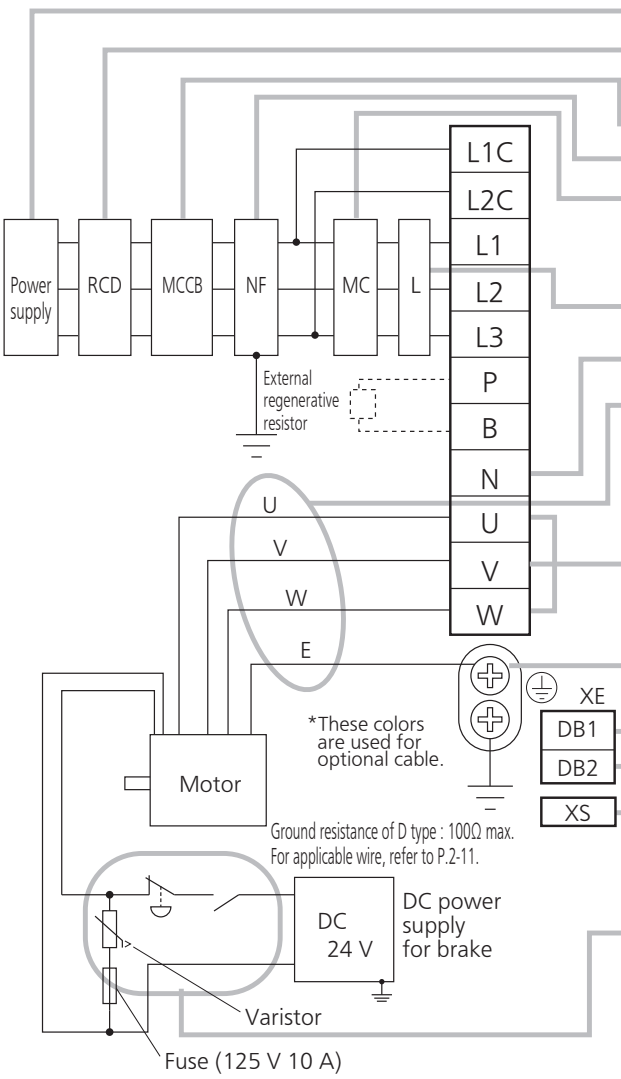

- Check the name plate of the driver for power specifications.
- Provide a residual current device. The residual current device to be the one designed for "Inverter" and is equipped with countermeasures for harmonics.
- Provide a circuit breaker.
- Make sure to provide a noise filter.
- Provide coil surge suppression units to the coil of the Magnetic Contactor recommended by manufacturer. Never start / stop the motor with this Magnetic Contactor.
- Provide an AC Reactor.
- Do not connect anything to N.
- Match motor connector to those of the corresponding driver (U,V,W).
- Avoid shorting and grounding. Don't connect the main power.
- Earth-ground this.
- Be sure to connect the ground terminal (⏚) of the driver, and the ground terminal (ground plate) of the control panel.
- Don't connect all the wires together when connect ground terminal (⏚). Two ground terminals are provided.
- Avoid ground wires to connect or touch any terminals of terminal block.
- Apply voltage under AC300 V, DC100 V.
- Set 1 when using built-in dynamic brake and 2 when not using.
- Compose a duplex Brake Control Circuit so that the brake can also be activated by an external immediate stop signal.
- The holding brake has no polarities.
- For the holding brake power supply capacity and how to use the brake, refer to “Specifications of Built-in Holding Brake” on P.2-78.
- Provide a varistor. Connect a 10 A fuse in series with the varistor.

Note The wiring indicated with the broken line shall be provided only when required.

Related page
- P.2-56 “Specifications of Motor connector”

2. System Configuration and Wiring

Wiring Diagram (G-frame, 200 V type)

Compose the circuit so that the main circuit power will be shut off when an error occurs. However, if you want to use "immediate stop function" and the main circuit power turns off, please be aware that you will no longer be able to use "immediate stop function" .

In Case of 3-Phase, G-frame, 200 V type

Power supply 3-phase, 200 V −15 % to 240 V +10 %

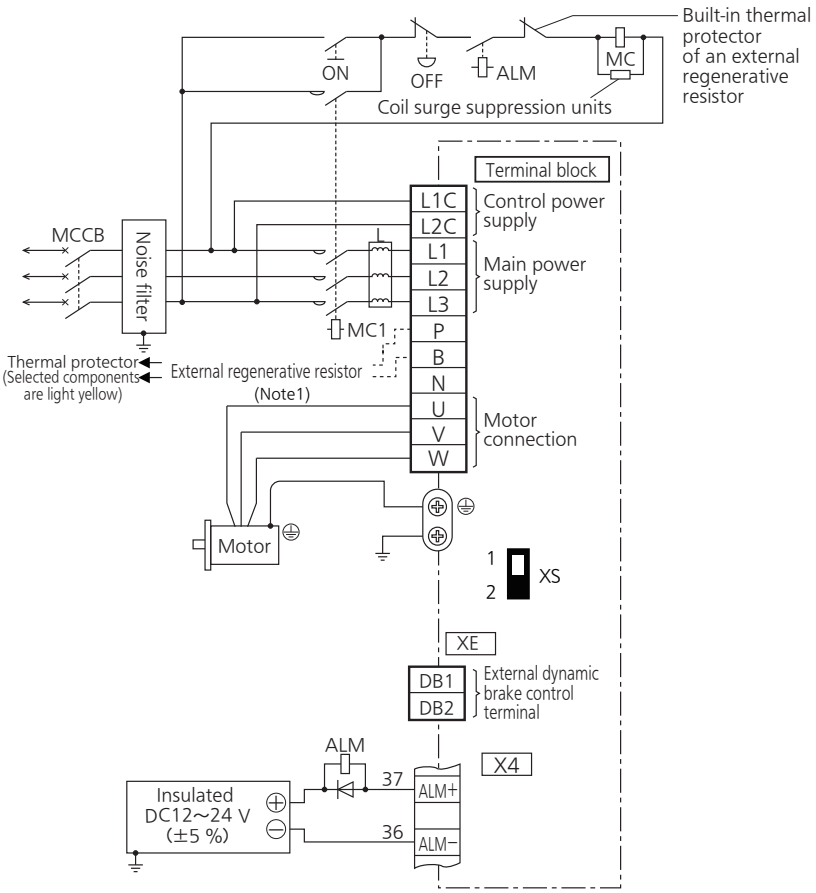

Note.1)

Frame No.	Built-in regenerative resistor	Connection of terminal block	
		In case of using an external regenerative resistor	In case of not using an external regenerative resistor
G-frame	Without	Connect an external regenerative resistor between P-B.	Shorted between P-B

Note The wiring indicated with the broken line shall be provided only when required.

Related page • P.2-56 "Specifications of Motor connector"

Connecting Example of H-frame

Apply the voltage designated on thenameplate from the power source. Symmetric current should be 5000 Arms or below. If the short-circuit current on the power source exceeds this value, use a current-limiting device (e.g. current-limiting fuse, current-limiting circuit breaker or transformer).

Mains
Residual current device

■Wiring of Main Circuit

Circuit Breaker (MCCB)
To protect power supply line from overloading, install a wiring circuit breaker rated to the capacity of the power supply.

Noise Filter (NF)
Removes external noise from the power lines. And reduces an effect of the noise generated by the servo driver.

Magnetic Contactor (MC)
Turns on/off the main power of the servo driver. Use coil surge suppression units together with this.
• Never start nor stop the servo motor with this Magnetic Contactor.

Reactor (L)
Reduces harmonic current of the main power.

L1C L2C

L1 L2 L3

Connection with input power supply P.2-38

Connection to external components P.2-38

P
B

Regenerative resistor (optional)

Remarks
- When you use an external regenerative resistor and dynamic brake, install an external protective apparatus, such as thermal fuse .
- Thermal fuse and thermal protector are built in to the regenerative resistor (Option). If the thermal fuse is activated, it will not resume.
- Mount the regenerative resistor and dynamic brake on incombustible material such as metal.

External dynamic brake resistor (to be supplied by customer)

Magnetic Contactor (MC)
Turns on/off the main power of the servo driver.
Use coil surge suppression units together with this.

Wiring to external dynamic brake resistor P.2-38
• Wiring to terminal DB1, DB2

Note
• No internal dynamic brake of H-frame(Only for externally mounted)

Remarks
• Apply voltage under AC300 V, DC100 V between DB1-DB2.

Note
This overall wiring diagram is a typical one. The pages that follow show wiring for specific application. The wiring indicated with the broken line shall be provided only when required.

Related page
• P.7-156 “Options”

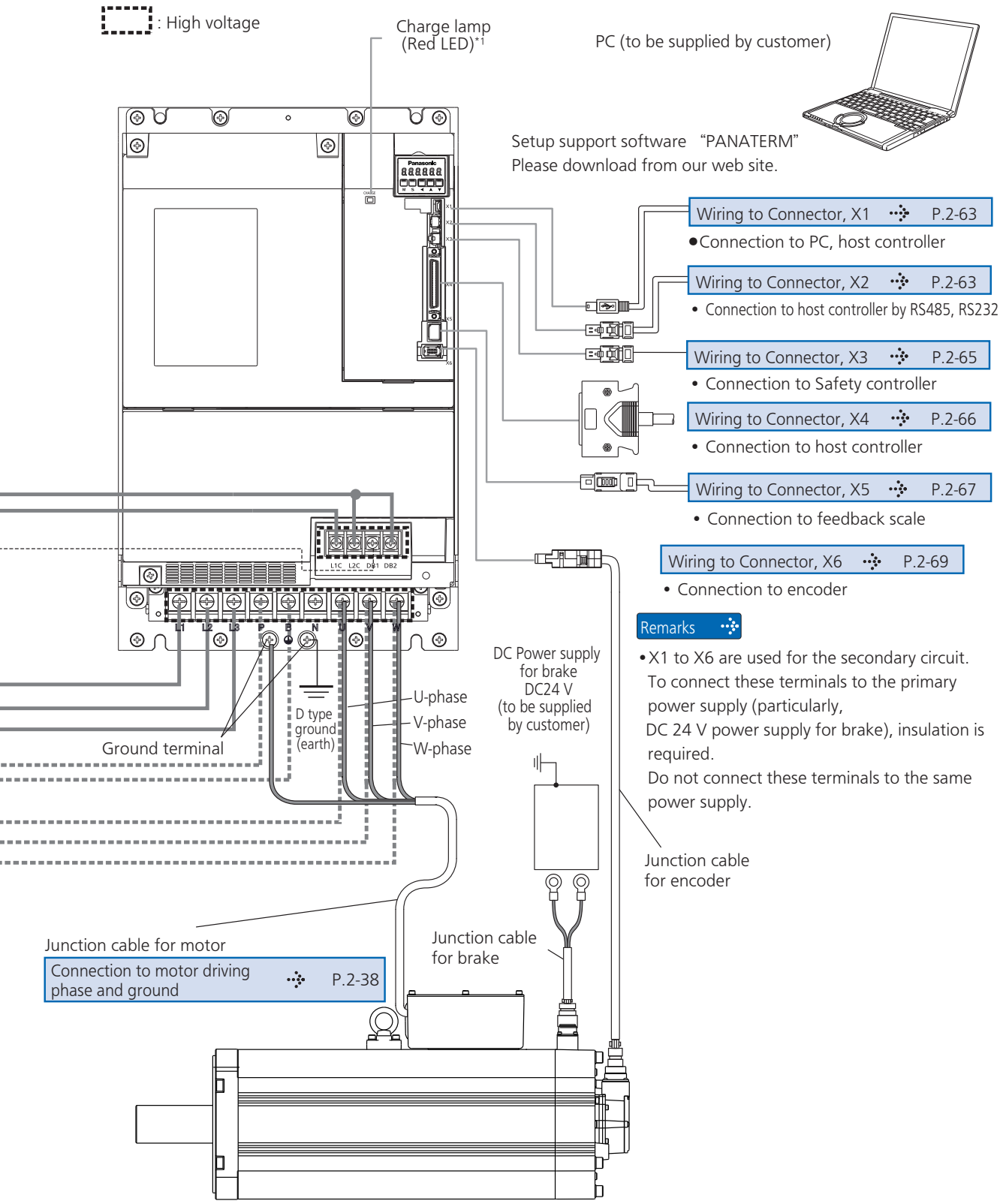

*1 Do not make displacement, wiring or inspection while the LED is lit - cause of electric shock.

Related page
• P.2-38 "Wiring of the Main Circuit (H-frame, 200 V type)"
• P.2-56 "Specifications of Motor connector"
URL: http://industrial.panasonic.com/ww/products/motors-compressors/fa-motors

H-frame, 200 V type

- Wiring should be performed by a specialist or an authorized personnel.
- Do not turn on the power until the wiring is completed.
- Never touch the terminal to which high voltage is applied. There is a risk of electric shock.

- Tips on Wiring

1) Take off the cover fixing screws, and detach the terminal cover.
2) Use clamp type terminals of round shape with insulation cover for wiring to the terminal block. For cable diameter and size, reter to "Driver and List of Applicable Peripheral Equipments" (P.2-10).
   Tighten the terminal block screw with a torque written on P2-13.
3) Attach the terminal cover, and fix with screws.
   Tighten the screw securing the cover with a torque written on P.2-13.

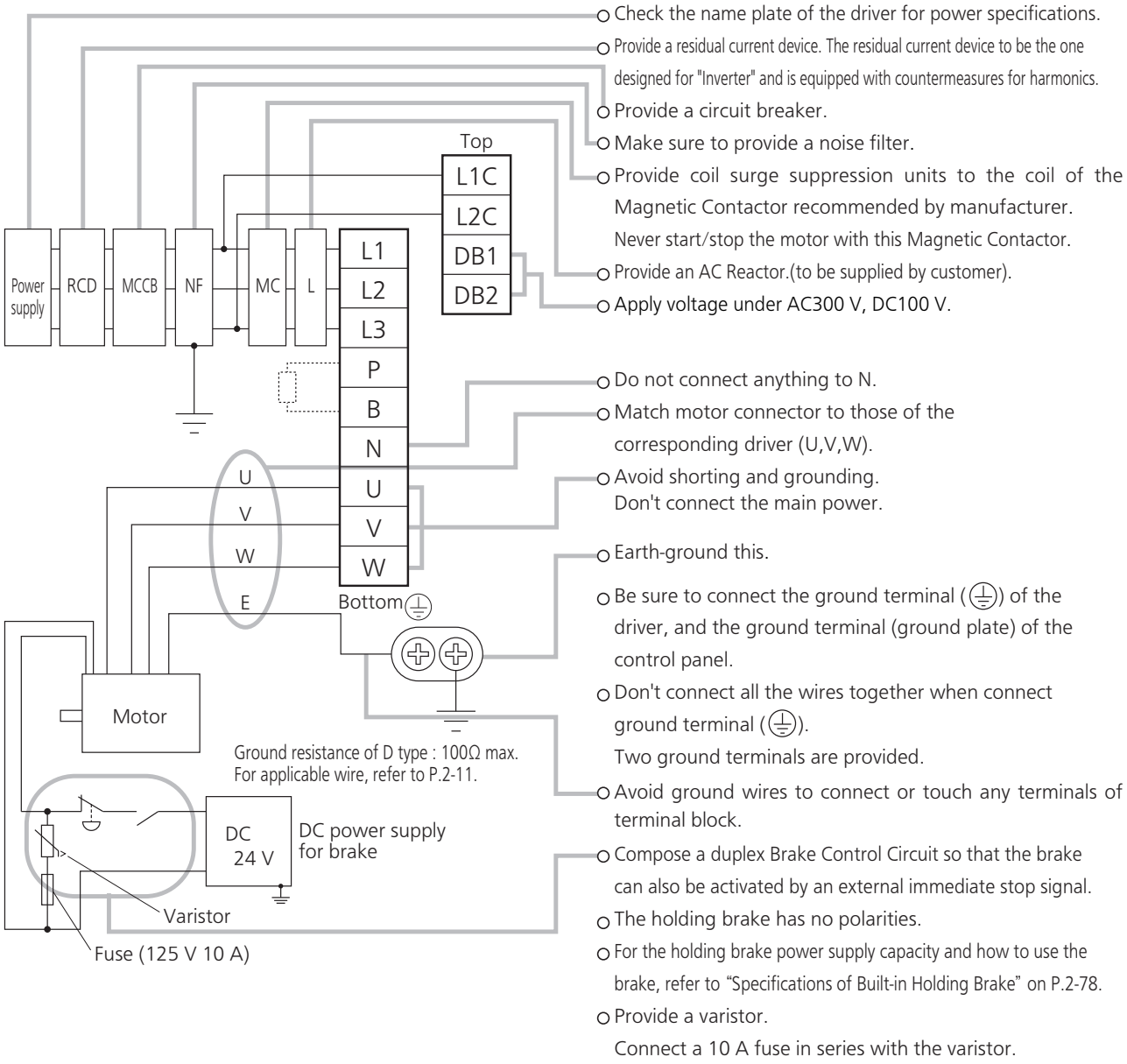

Note The wiring indicated with the broken line shall be provided only when required.

Related page
- P.2-56 "Specifications of Motor connector"

2. System Configuration and Wiring

Wiring Diagram (H-frame, 200 V type)

Compose the circuit so that the main circuit power will be shut off when an error occurs. However, if you want to use "immediate stop function" and the main circuit power turns off, please be aware that you will no longer be able to use "immediate stop function" .

In Case of 3-Phase, H-frame, 200 V type

Power supply 3-phase, 200 V −15 % to 240 V +10 %

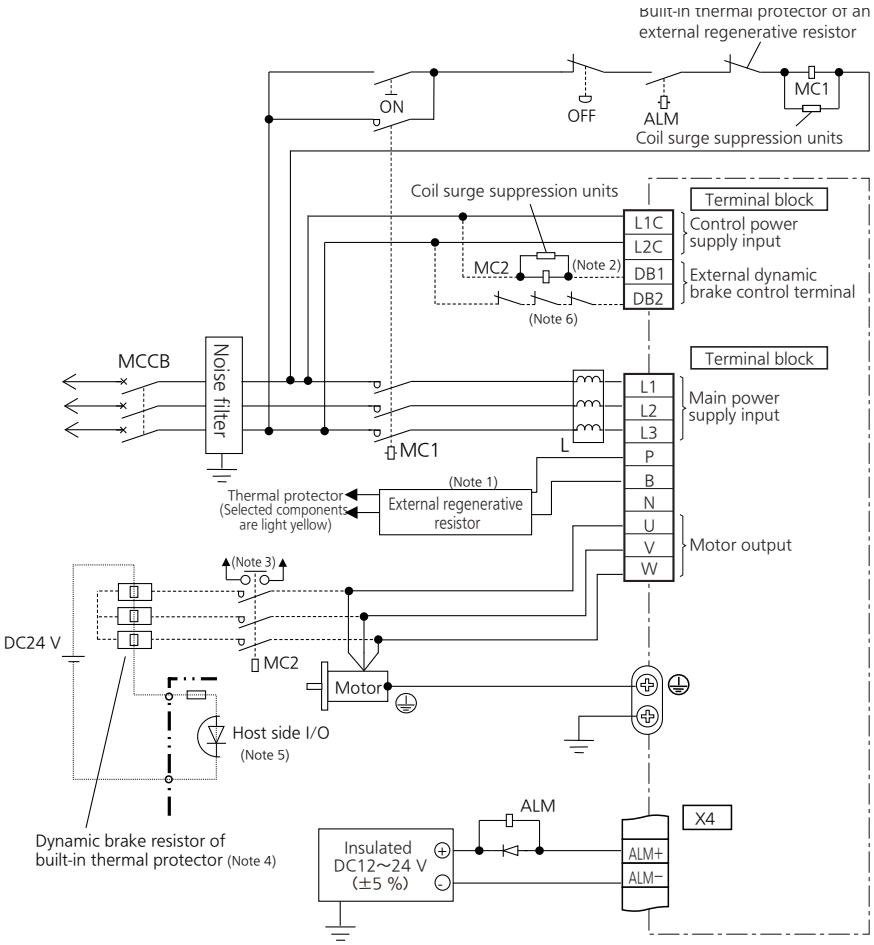

Note.1)

Frame No.	Built-in regenerative resistor	Connection of terminal block	
		In case of using an external regenerative resistor	In case of not using an external regenerative resistor
H-frame	Without	Connect an external regenerative resistor between P-B.	Shorted between P-B

(Note 2) Use the same specification for Magnetic Contactor(MC2) and main circuit Magnetic Contactor(MC).
(Note 3) Please set up auxiliary contacts to ensure that after the main contacts are melted, the servo will not enter the servo-on condition by the external control signal.
(Note 4) Please use dynamic brake resistor of 1.2 Ω 400W. Dynamic brake resistor, etc. should be installed on incombustible materials such as metals.
(Note 5) After the thermal protector is installed on the dynamic brake resistor, the thermal protector condition can be monitored by the host I/O to ensure that when the thermal protector operates, the servo will not enter the servo-on condition by the external control signal.
(Note 6) When the host I/O monitor thermal protector is not available, please connect the output of thermal protector to L2C-DB2 to ensure that the dynamic brake does not operate when the thermal protector is operating.

Note The wiring indicated with the broken line shall be provided only when required.

Related page • P.2-56 "Specifications of Motor connector"

Connecting Example of D,E-frame, 400 V type

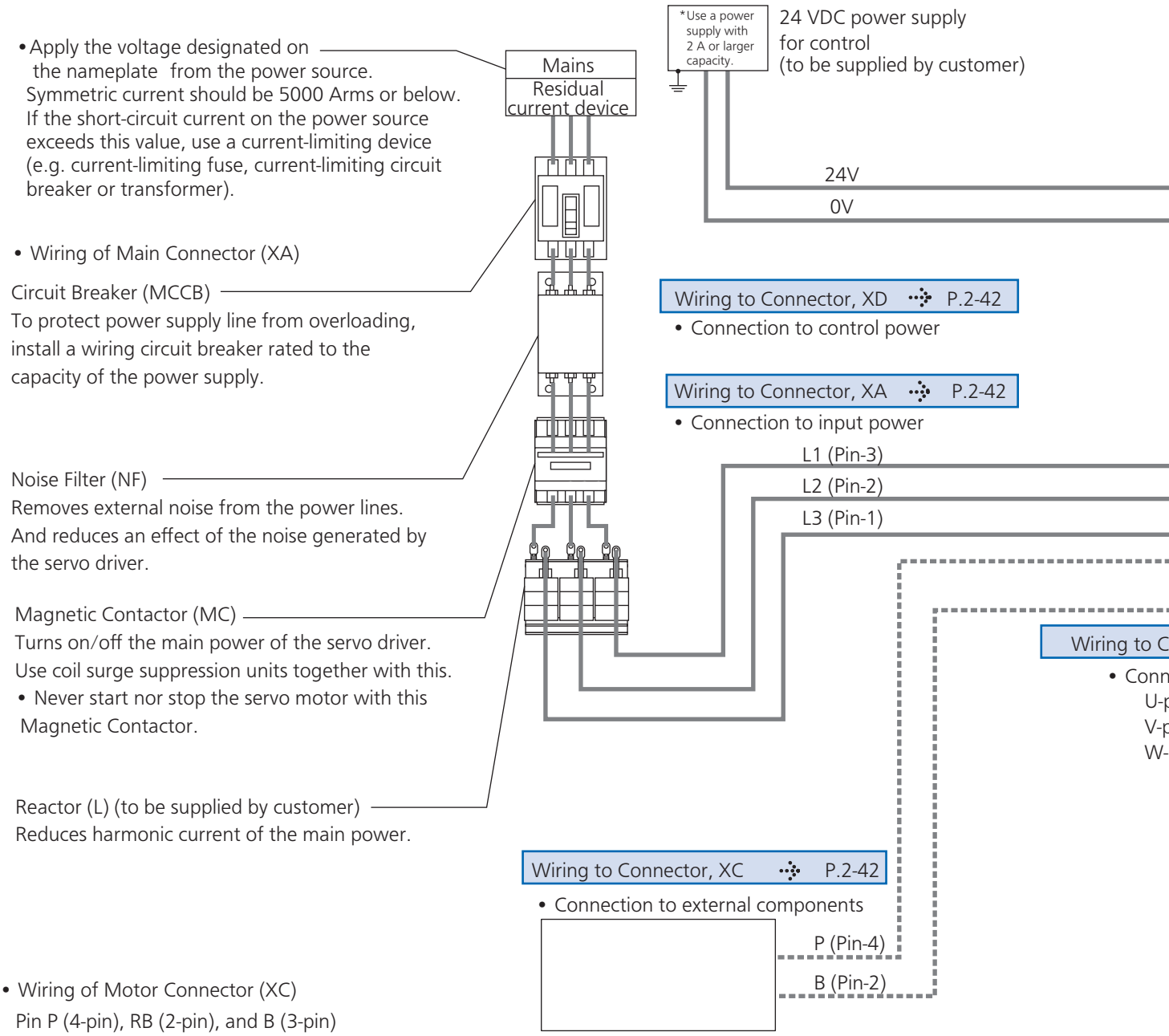

Remarks

- When you use an external regenerative resistor, install an external protective apparatus, such as thermal fuse without fail.
- Thermal fuse and thermal protector are built in to the regenerative resistor (Option). If the thermal fuse is activated, it will not resume.
- Mount the regenerative resistor on incombustible material such as metal.

Note This overall wiring diagram is a typical one. The pages that follow show wiring for specific application. The wiring indicated with the broken line shall be provided only when required.

Related page
- P.7-156 “Options”

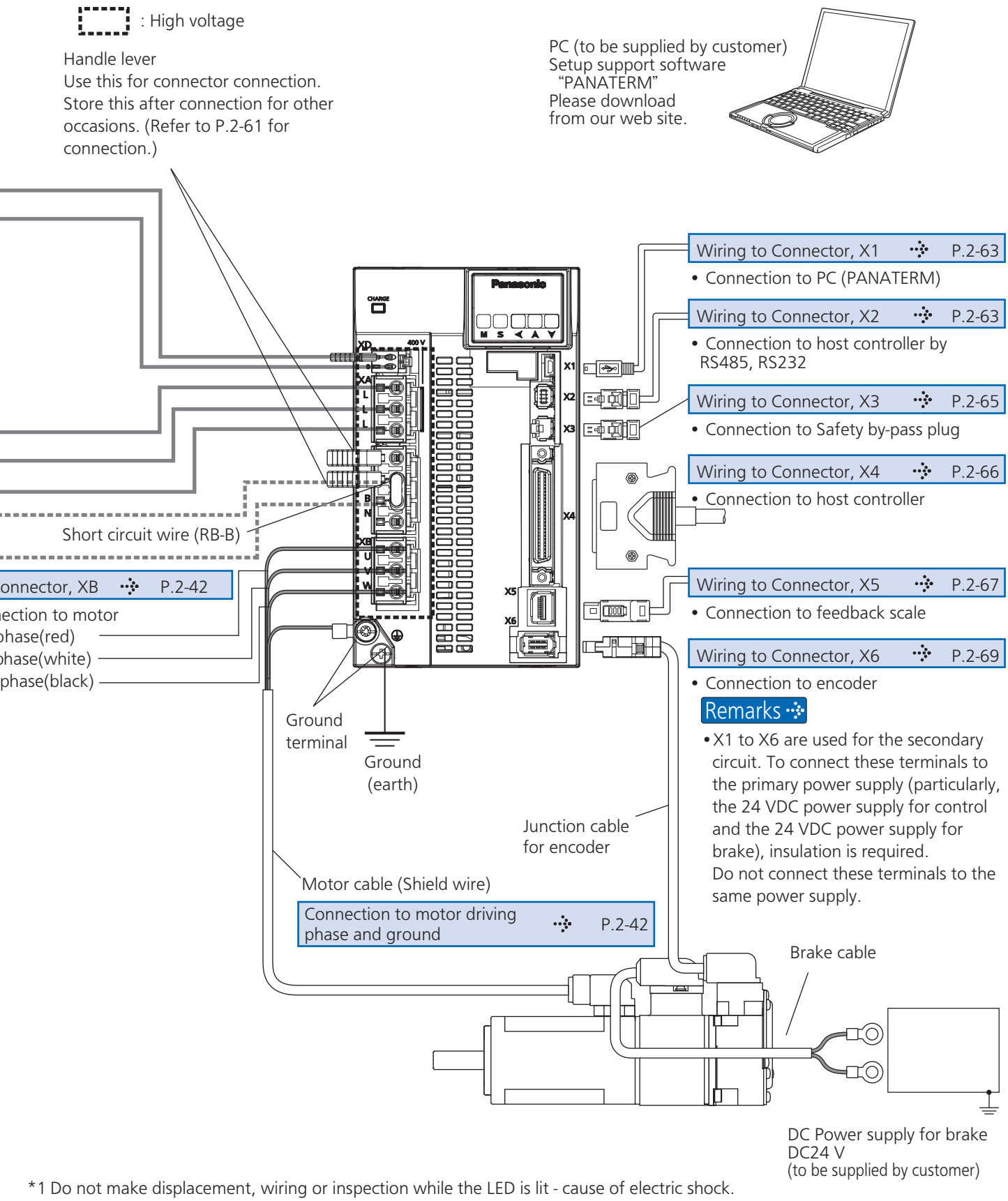

*1 Do not make displacement, wiring or inspection while the LED is lit - cause of electric shock.

Related page
- P.2-42 "Wiring of the Main Circuit (D,E-frame, 400 V type)"
- P.2-56 "Specifications of Motor connector"

URL: http://industrial.panasonic.com/ww/products/motors-compressors/fa-motors

D,E-frame, 400 V type

- Wiring should be performed by a specialist or an authorized personnel.
- Do not turn on the power until the wiring is completed.
- Never touch the power connector (XA, XB, XC and XD) to which high voltage is applied. There is a risk of electric shock.

- Tips on Wiring

1) Wire connector (XA, XB, XC and XD).
2) Connect the wired connector to the driver.
   Fully insert the connector to the bottom until it clicks.

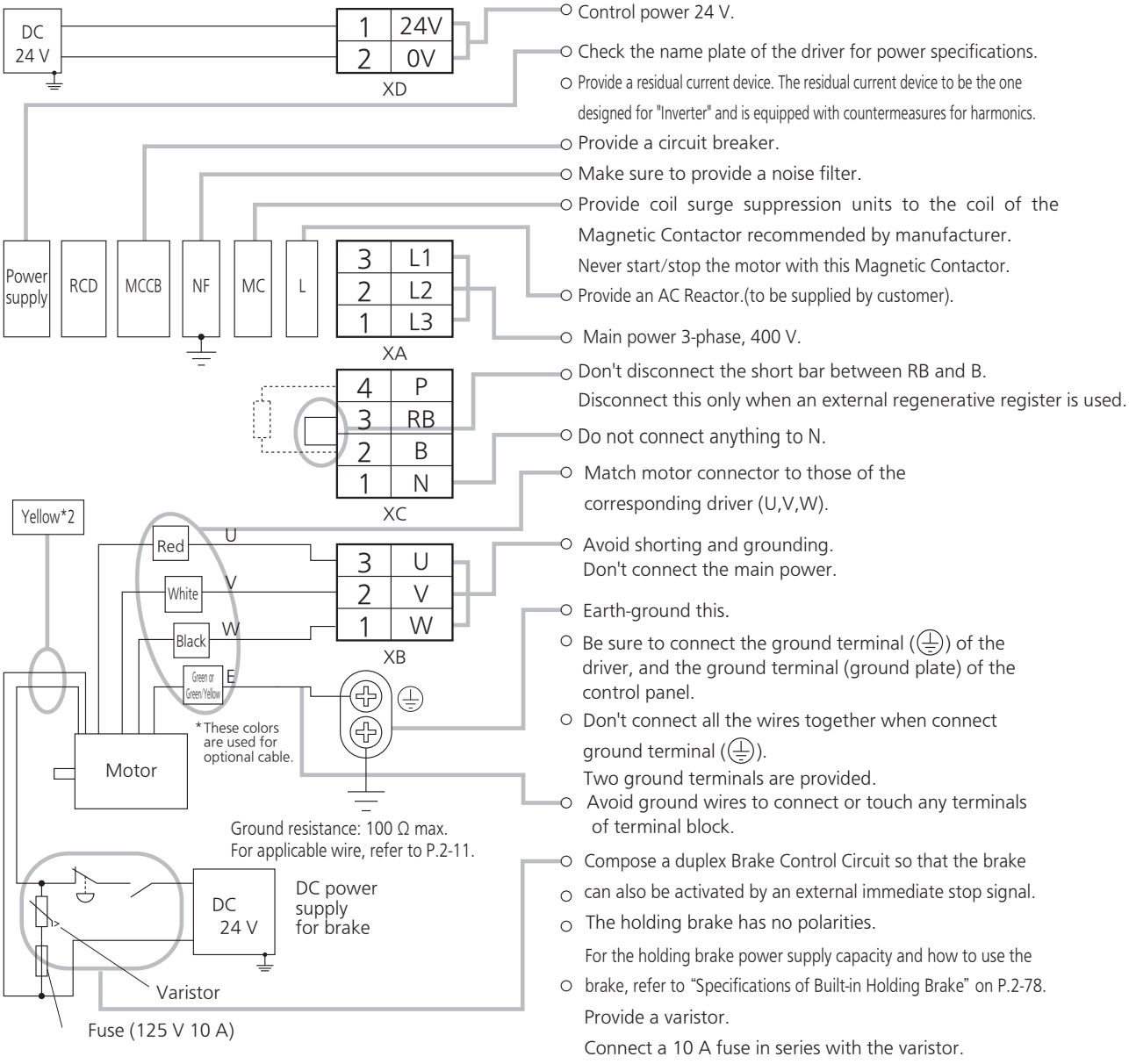

Note The wiring indicated with the broken line shall be provided only when required.

Related page
- P.2-56 "Specifications of Motor connector"

2. System Configuration and Wiring

Wiring Diagram (D,E-frame, 400 V type)

Compose the circuit so that the main circuit power will be shut off when an error occurs. However, if you want to use "immediate stop function" and the main circuit power turns off, please be aware that you will no longer be able to use "immediate stop function" .

In Case of 3-Phase, D,E-frame, 400 V type

Power supply 3-phase, 200 V −15 % to 240 V +10 %

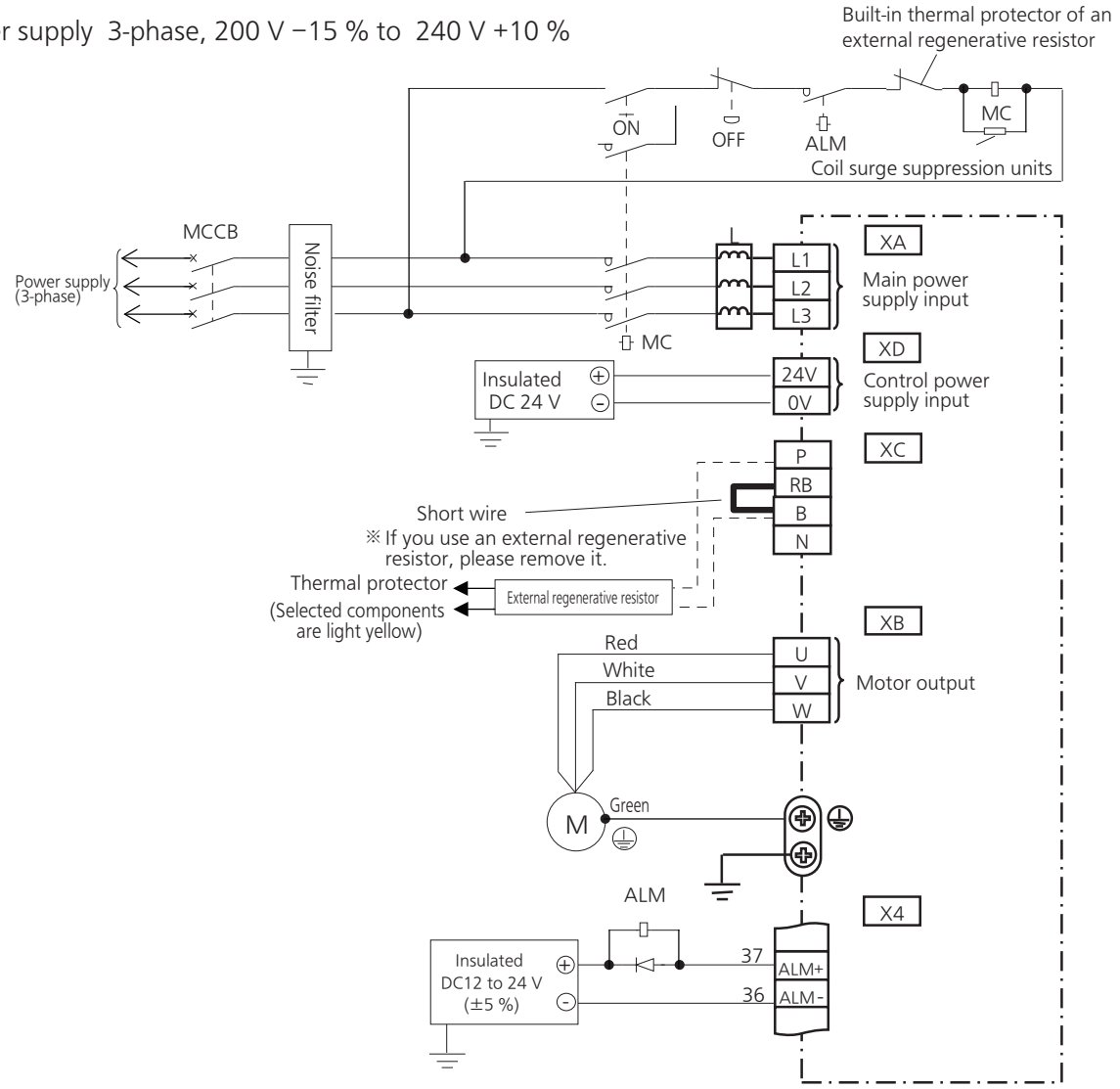

Note.1)

Frame No.	Short wire (Accessory)	Built-in regenerative resistor	Connection of the connector XC	
			In case of using an external regenerative resistor.	In case of not using an external regenerative resistor.
D,E-frame	with	with	• Remove the short wire accessory from between RB-B. • Connect an external regenerative resistor between P-B.	• Shorted between RB-B with an attached short wire

Note The wiring indicated with the broken line shall be provided only when required.

Related page • P.2-56 "Specifications of Motor connector"

Connecting Example of F-frame, 400 V type

• Apply the voltage designated on the nameplate from the power source.
Symmetric current should be 5000 Arms or below.
If the short-circuit current on the power source exceeds this value, use a current-limiting device (e.g. current-limiting fuse, current-limiting circuit breaker or transformer).

■ Wiring of Main Circuit

Circuit Breaker (MCCB)
To protect power supply line from overloading, install a wiring circuit breaker rated to the capacity of the power supply.

Noise Filter (NF)
Removes external noise from the power lines. And reduces an effect of the noise generated by the servo driver.

Magnetic Contactor (MC)
Turns on/off the main power of the servo driver.
Use coil surge suppression units together with this.
• Never start nor stop the servo motor with this Magnetic Contactor.

Reactor (L) (to be supplied by customer)
Reduces harmonic current of the main power.

Pin P (4-pin), RB (2-pin), and B (3-pin)
• RB and B to be kept shorted for normal operation.
• When you connect an external regenerative resistor, disconnect a short circuit wire between RB and B, then connect the external regenerative resistor between P and B, set up Pr0.16 to 1 or 2.

Pin N
• Do not connect anything.

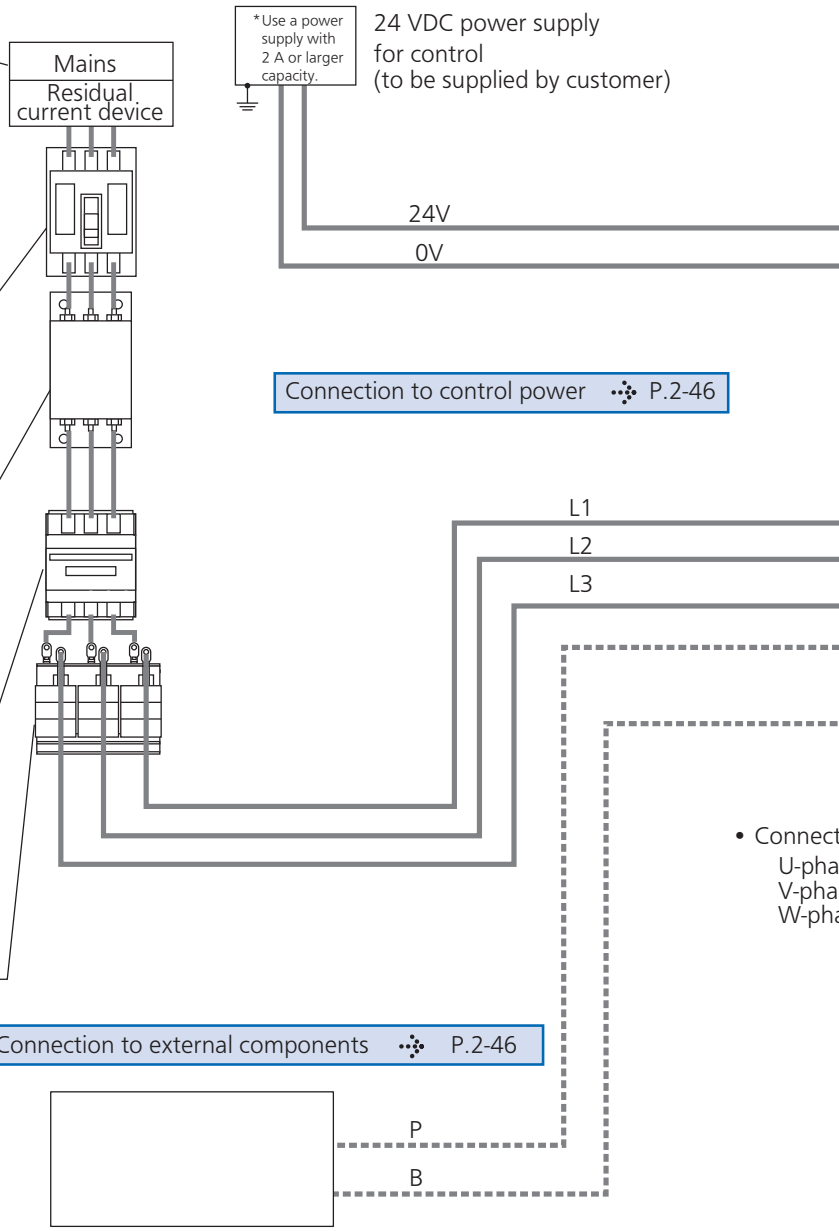

Regenerative resistor (optional)

Remarks
• When you use an external regenerative resistor, install an external protective apparatus, such as thermal fuse without fail.
• Thermal fuse and thermal protector are built in to the regenerative resistor (Option). If the thermal fuse is activated, it will not resume.
• Mount the regenerative resistor on incombustible material such as metal.

Note This overall wiring diagram is a typical one. The pages that follow show wiring for specific application. The wiring indicated with the broken line shall be provided only when required.

Related page
• P.7-156 "Options"

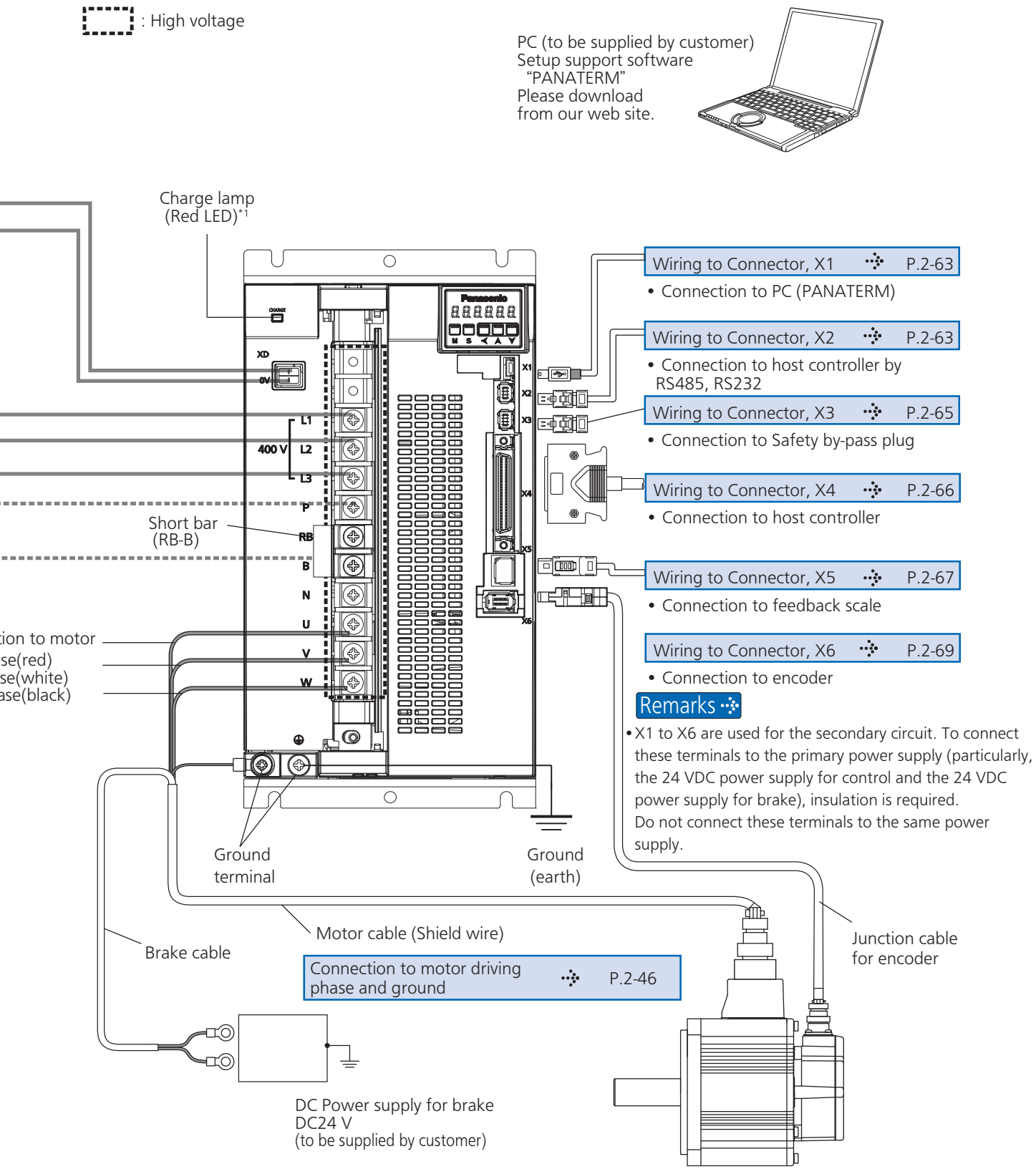

*1 Do not make displacement, wiring or inspection while the LED is lit - cause of electric shock.

Related page
• P.2-46 "Wiring of the Main Circuit (F-frame, 400 V type)"
• P.2-56 "Specifications of Motor connector"
URL: http://industrial.panasonic.com/ww/products/motors-compressors/fa-motors

F-frame, 400 V type

- Wiring should be performed by a specialist or an authorized personnel.
- Do not turn on the power until the wiring is completed.
- Never touch the power connector (XA, XB, XC and XD) to which high voltage is applied. There is a risk of electric shock.
- Tips on Wiring

1) Wire connector (XA, XB, XC and XD).
2) Connect the wired connector to the driver.
   Fully insert the connector to the bottom until it clicks.

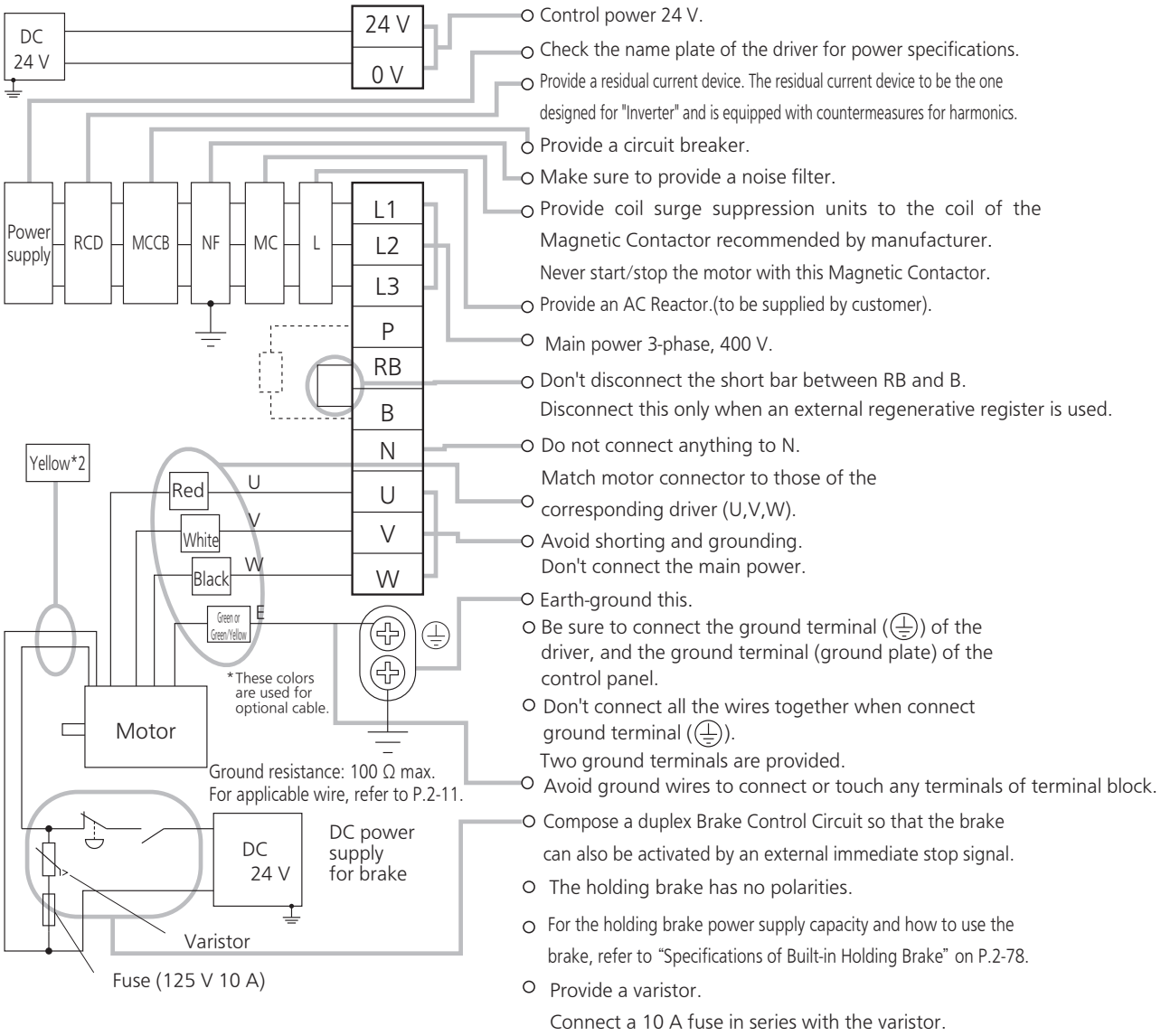

Note The wiring indicated with the broken line shall be provided only when required.

Related page
- P.2-56 "Specifications of Motor connector"

2. System Configuration and Wiring

Wiring Diagram (F-frame, 400 V type)

Compose the circuit so that the main circuit power will be shut off when an error occurs. However, if you want to use "immediate stop function" and the main circuit power turns off, please be aware that you will no longer be able to use "immediate stop function" .

In Case of 3-Phase, D,E-frame, 400 V type

Power supply 3-phase, 200 V −15 % to 240 V +10 %

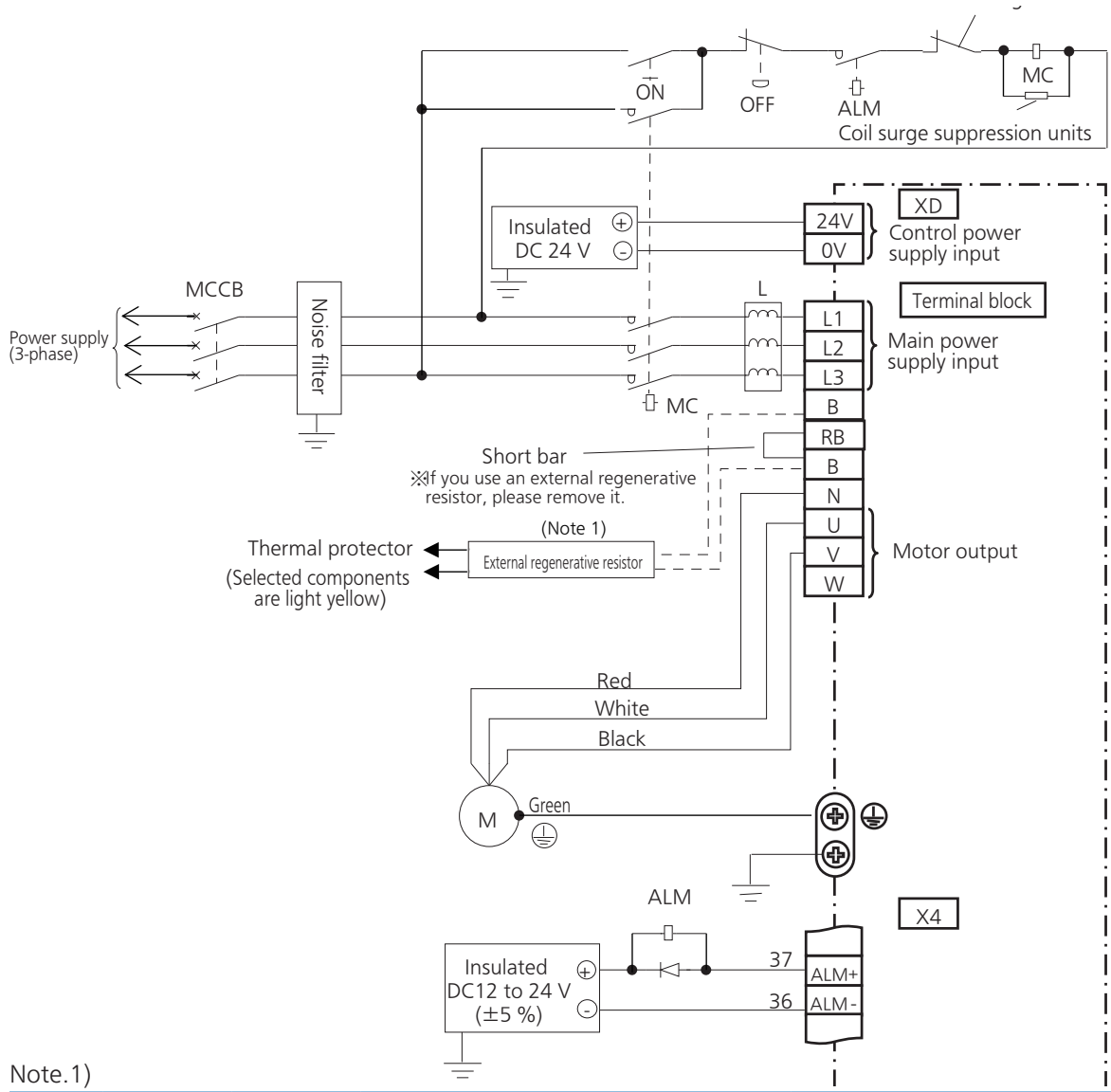

Note.1)

Frame No.	Short wire (Accessory)	Built-in regenerative resistor	Connection of the connector XC	
			In case of using an external regenerative resistor.	In case of not using an external regenerative resistor.
F-frame	with	with	• Remove the short wire accessory from between RB-B. • Connect an external regenerative resistor between P-B.	• Shorted between RB-B with an attached short wire

Note The wiring indicated with the broken line shall be provided only when required.

Related page • P.2-56 "Specifications of Motor connector"

Connecting Example of G-frame, 400 V type

• Apply the voltage designated on the nameplate from the power source.
Symmetric current should be 5000 Arms or below.
If the short-circuit current on the power source exceeds this value, use a current-limiting device (e.g. current-limiting fuse, current-limiting circuit breaker or transformer).

■ Wiring of Main Circuit

Noise Filter (NF)
Removes external noise from the power lines.
And reduces an effect of the noise generated by the servo driver.

Circuit Breaker (MCCB)
To protect power supply line from overloading, install a wiring circuit breaker rated to the capacity of the power supply.

Magnetic Contactor (MC)
Turns on/off the main power of the servo driver.
Use coil surge suppression units together with this.
• Never start nor stop the servo motor with this Magnetic Contactor.

Reactor (L)
Reduces harmonic current of the main power.

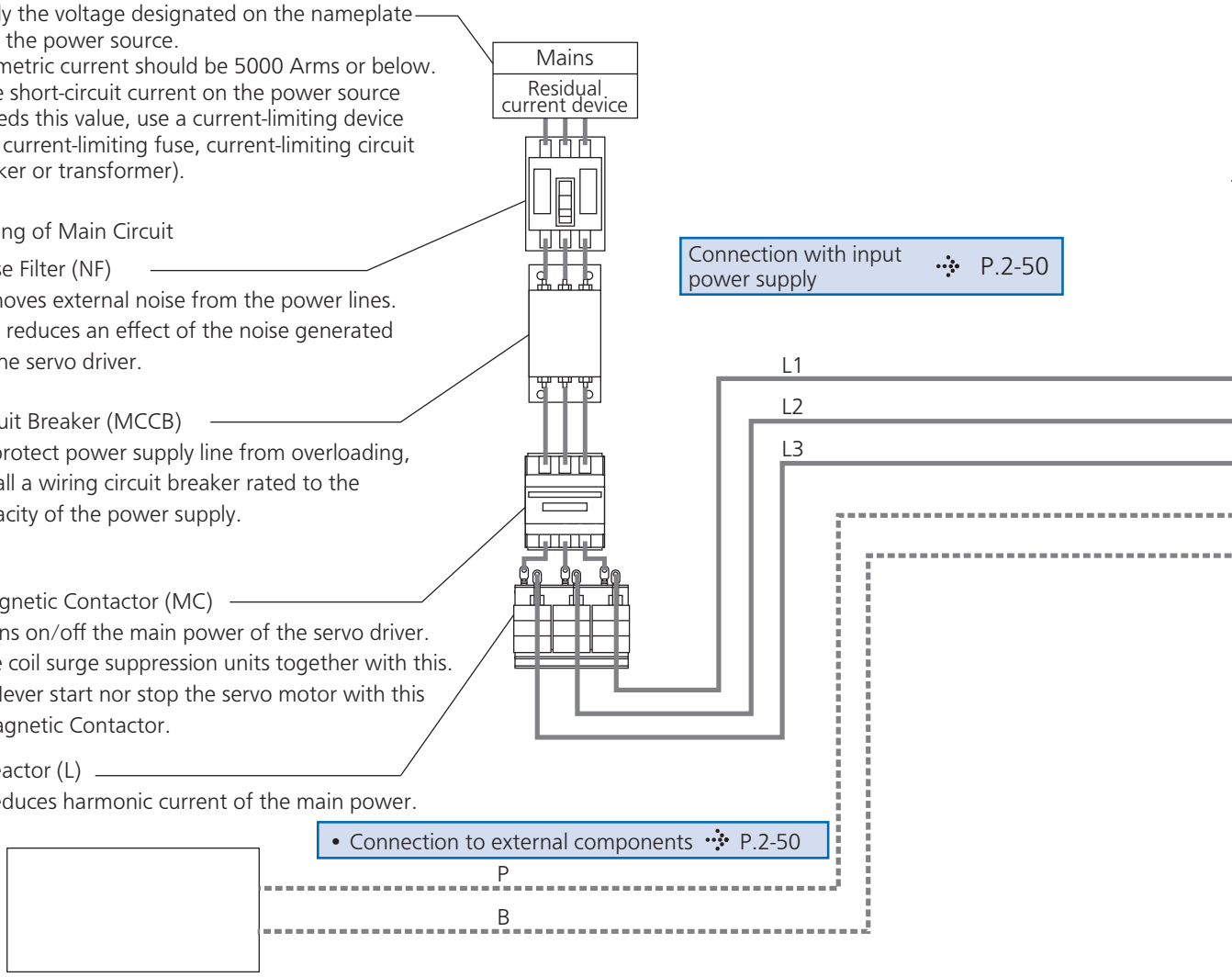

Regenerative resistor (optional)

Remarks

• When you use an external regenerative resistor, install an external protective apparatus, such as thermal fuse without fail.
• Thermal fuse and thermal protector are built in to the regenerative resistor (Option). If the thermal fuse is activated, it will not resume.
• Mount the regenerative resistor on incombustible material such as metal.

Note This overall wiring diagram is a typical one. The pages that follow show wiring for specific application. The wiring indicated with the broken line shall be provided only when required.

Related page
• P.7-156 "Options"

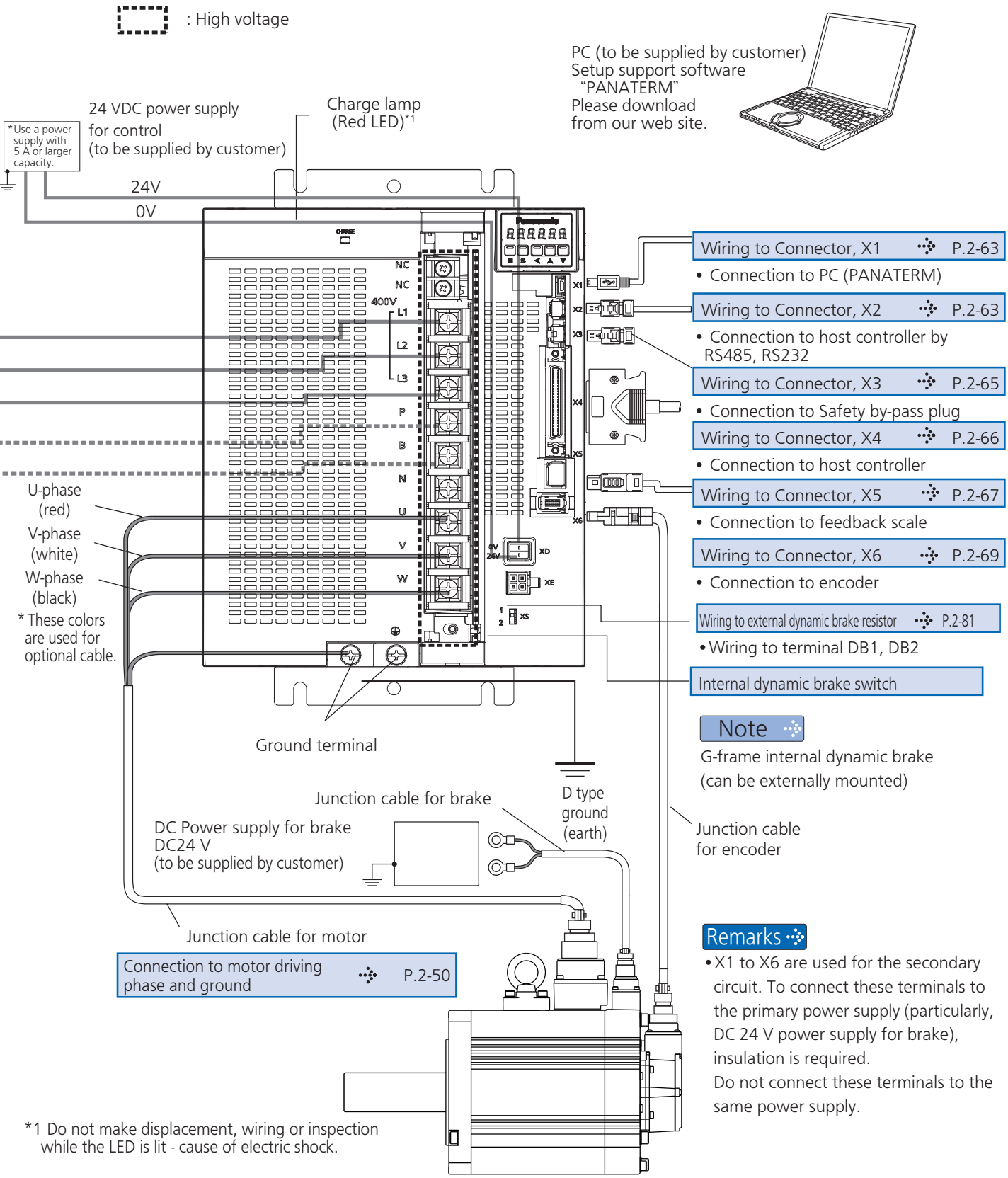

Related page
- P.2-50 "Wiring of the Main Circuit (G-frame, 400 V type)"
- P.2-56 "Specifications of Motor connector"

URL: http://industrial.panasonic.com/ww/products/motors-compressors/fa-motors

G-frame, 400 V type

- Wiring should be performed by a specialist or an authorized personnel.
- Do not turn on the power until the wiring is completed.
- Never touch the power connector (XA, XB, XC and XD) to which high voltage is applied. There is a risk of electric shock.

- Tips on Wiring

1) Wire connector (XA, XB, XC and XD).
2) Connect the wired connector to the driver.
   Fully insert the connector to the bottom until it clicks.

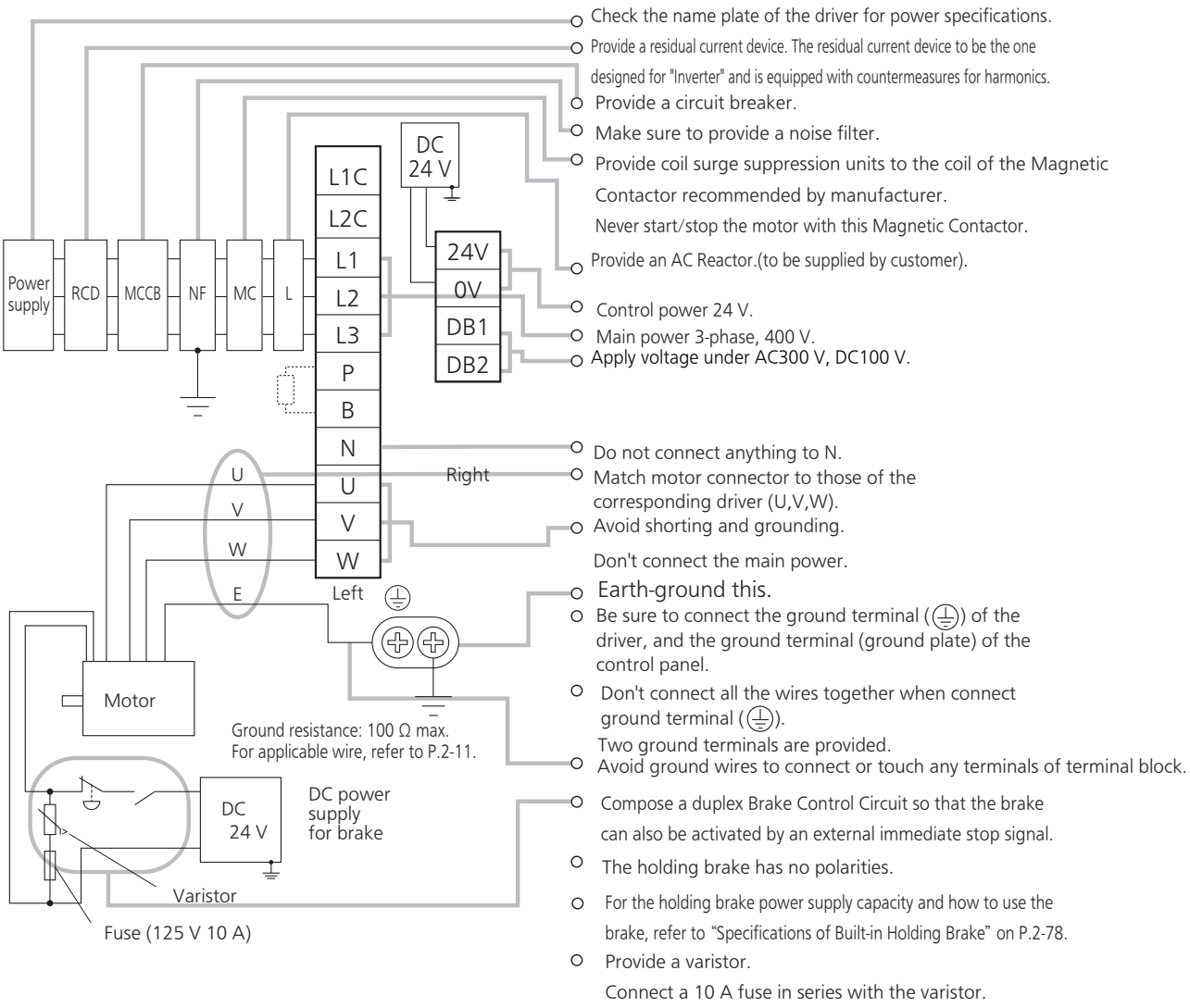

Note The wiring indicated with the broken line shall be provided only when required.

Related page
- P.2-56 "Specifications of Motor connector"

2. System Configuration and Wiring

Wiring Diagram (G-frame, 400 V type)

Compose the circuit so that the main circuit power will be shut off when an error occurs. However, if you want to use "immediate stop function" and the main circuit power turns off, please be aware that you will no longer be able to use "immediate stop function" .

In Case of 3-Phase, D,E-frame, 400 V type

Power supply 3-phase, 200 V −15 % to 240 V +10 %

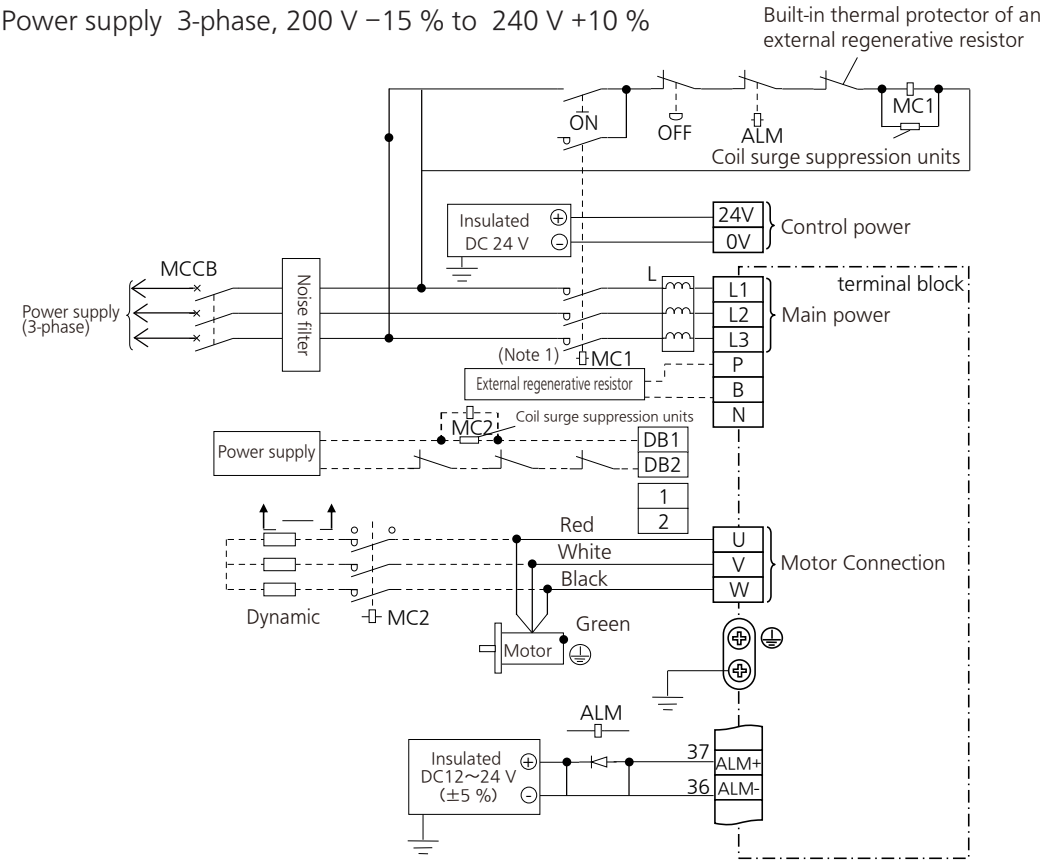

Note.1)

Frame No.	Short bar (Accessory)	Built-in regenerative resistor	Connection of the connector XC	
			In case of using an external regenerative resistor.	In case of not using an external regenerative resistor.
D,E-frame	without	without	• Connect an external regenerative resistor between P-B.	• Shorted between P-B

Note The wiring indicated with the broken line shall be provided only when required.

Related page • P.2-56 "Specifications of Motor connector"

Connecting Example of H-frame, 400 V type

• Apply the voltage designated on the nameplate from the power source.
Symmetric current should be 5000 Arms or below.
If the short-circuit current on the power source exceeds this value, use a current-limiting device (e.g. current-limiting fuse, current-limiting circuit breaker or transformer).

■ Wiring of Main Circuit

Circuit Breaker (MCCB)
To protect power supply line from overloading, install a wiring circuit breaker rated to the capacity of the power supply.

Noise Filter (NF)
Removes external noise from the power lines. And reduces an effect of the noise generated by the servo driver.

Magnetic Contactor (MC)
Turns on/off the main power of the servo driver.
Use coil surge suppression units together with this.
• Never start nor stop the servo motor with this Magnetic Contactor.

Reactor (L) (to be supplied by customer)
Reduces harmonic current of the main power.

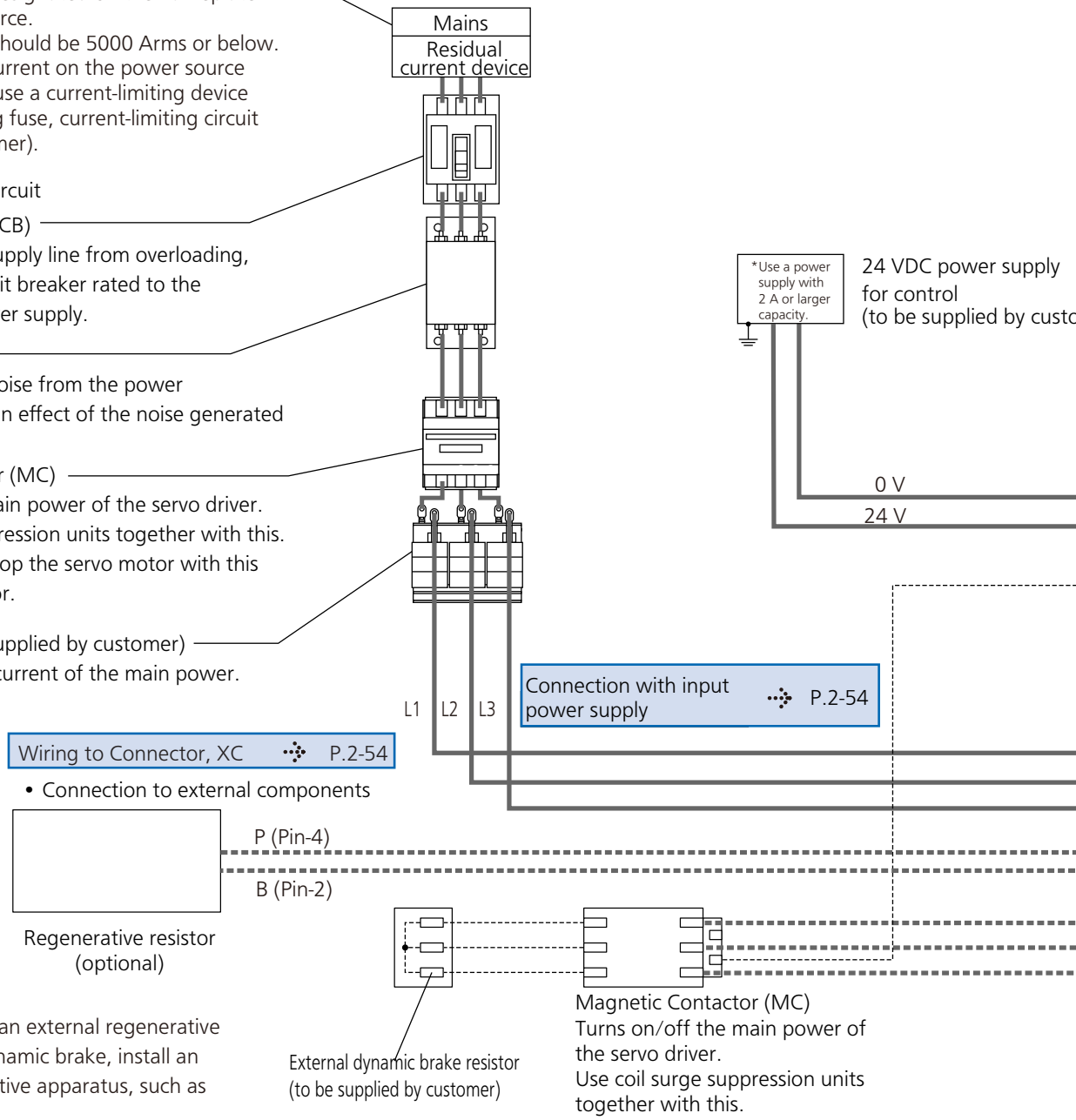

Remarks

• When you use an external regenerative resistor and dynamic brake, install an external protective apparatus, such as thermal fuse .
• Thermal fuse and thermal protector are built in to the regenerative resistor (Option). If the thermal fuse is activated, it will not resume.
• Mount the regenerative resistor and dynamic brake on incombustible material such as metal.

Wiring to external dynamic brake resistor P.2-54

• Wiring to terminal DB1, DB2

Note

• No internal dynamic brake of H-frame(Only for externally mounted)

Remarks

• Apply voltage under AC300 V, DC100 V between DB1-DB2.

Note

This overall wiring diagram is a typical one. The pages that follow show wiring for specific application. The wiring indicated with the broken line shall be provided only when required.

Related page
• P.7-156 “Options”

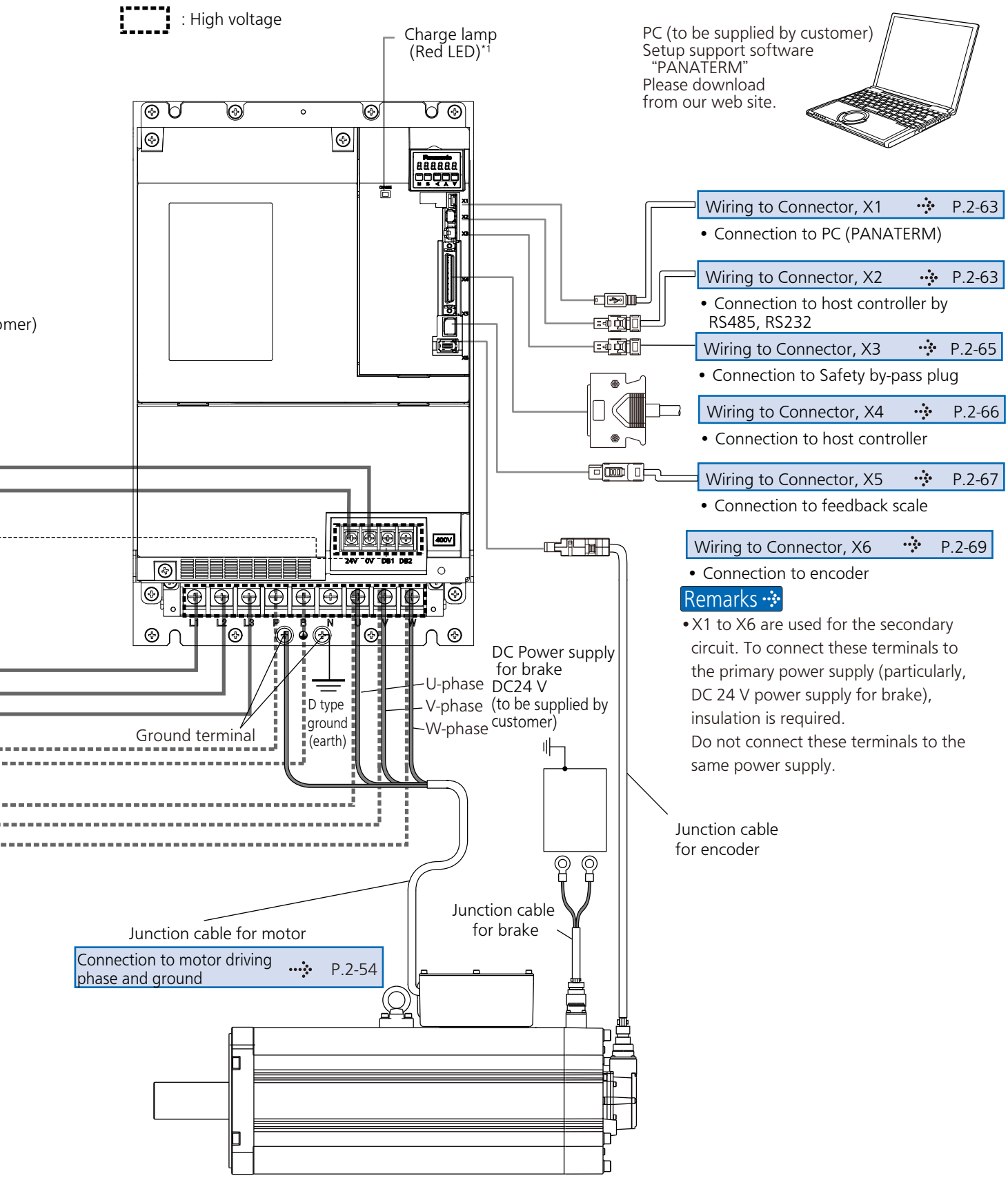

*1 Do not make displacement, wiring or inspection

Related page
- P.2-54 "Wiring of the Main Circuit (H-frame, 400 V type)"
- P.2-56 "Specifications of Motor connector"

URL: http://industrial.panasonic.com/ww/products/motors-compressors/fa-motors

H-frame, 400 V type

- Wiring should be performed by a specialist or an authorized personnel.
- Do not turn on the power until the wiring is completed.
- Never touch the power connector (XA, XB, XC and XD) to which high voltage is applied. There is a risk of electric shock.
- Tips on Wiring

1) Wire connector (XA, XB, XC and XD).
2) Connect the wired connector to the driver.
   Fully insert the connector to the bottom until it clicks.

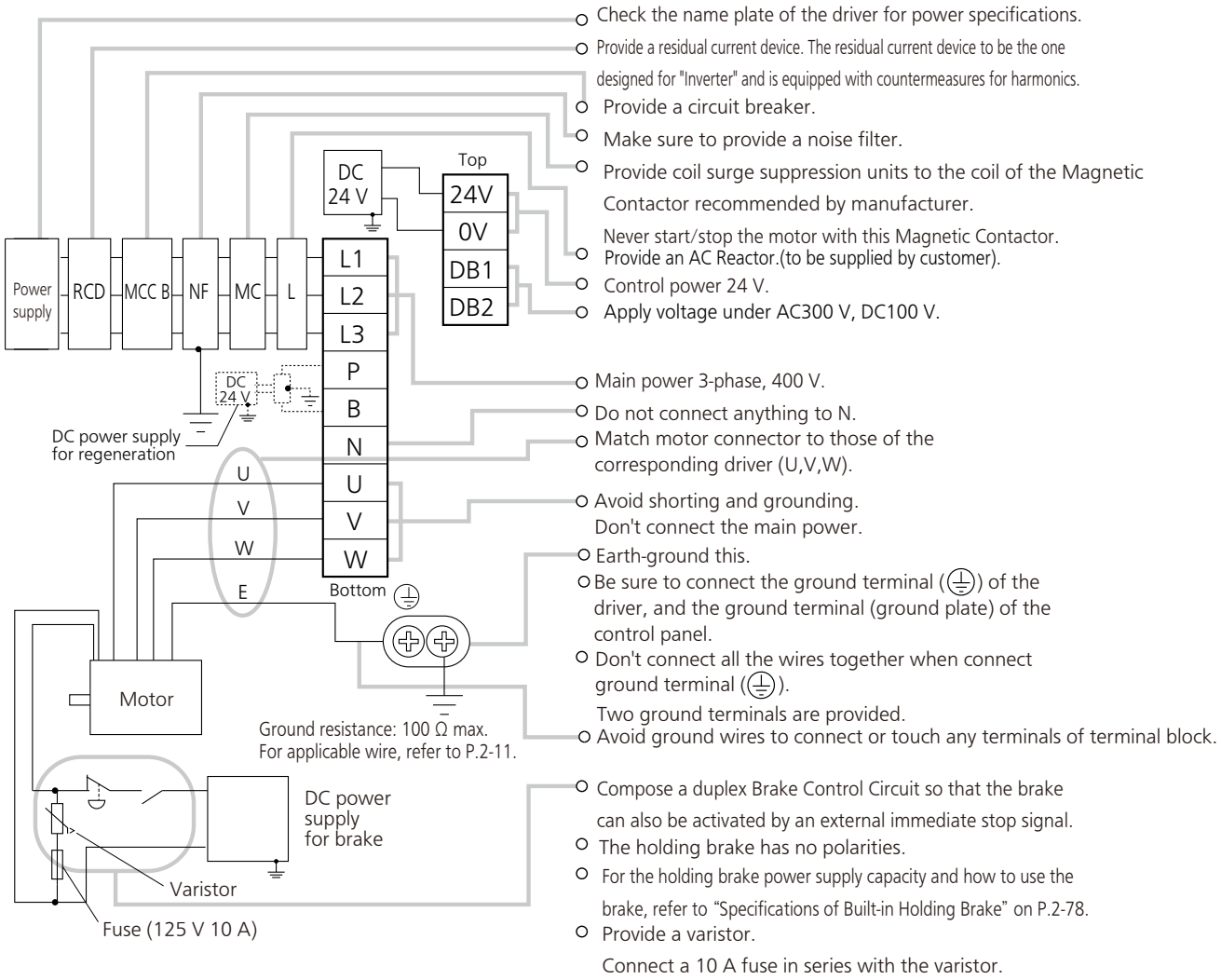

Note The wiring indicated with the broken line shall be provided only when required.

Related page
- P.2-56 "Specifications of Motor connector"

2. System Configuration and Wiring

Wiring Diagram (H-frame, 400 V type)

Compose the circuit so that the main circuit power will be shut off when an error occurs. However, if you want to use "immediate stop function" and the main circuit power turns off, please be aware that you will no longer be able to use "immediate stop function" .

In Case of 3-Phase, H-frame, 400 V type

Power supply 3-phase, 200 V −15 % to 240 V +10 %

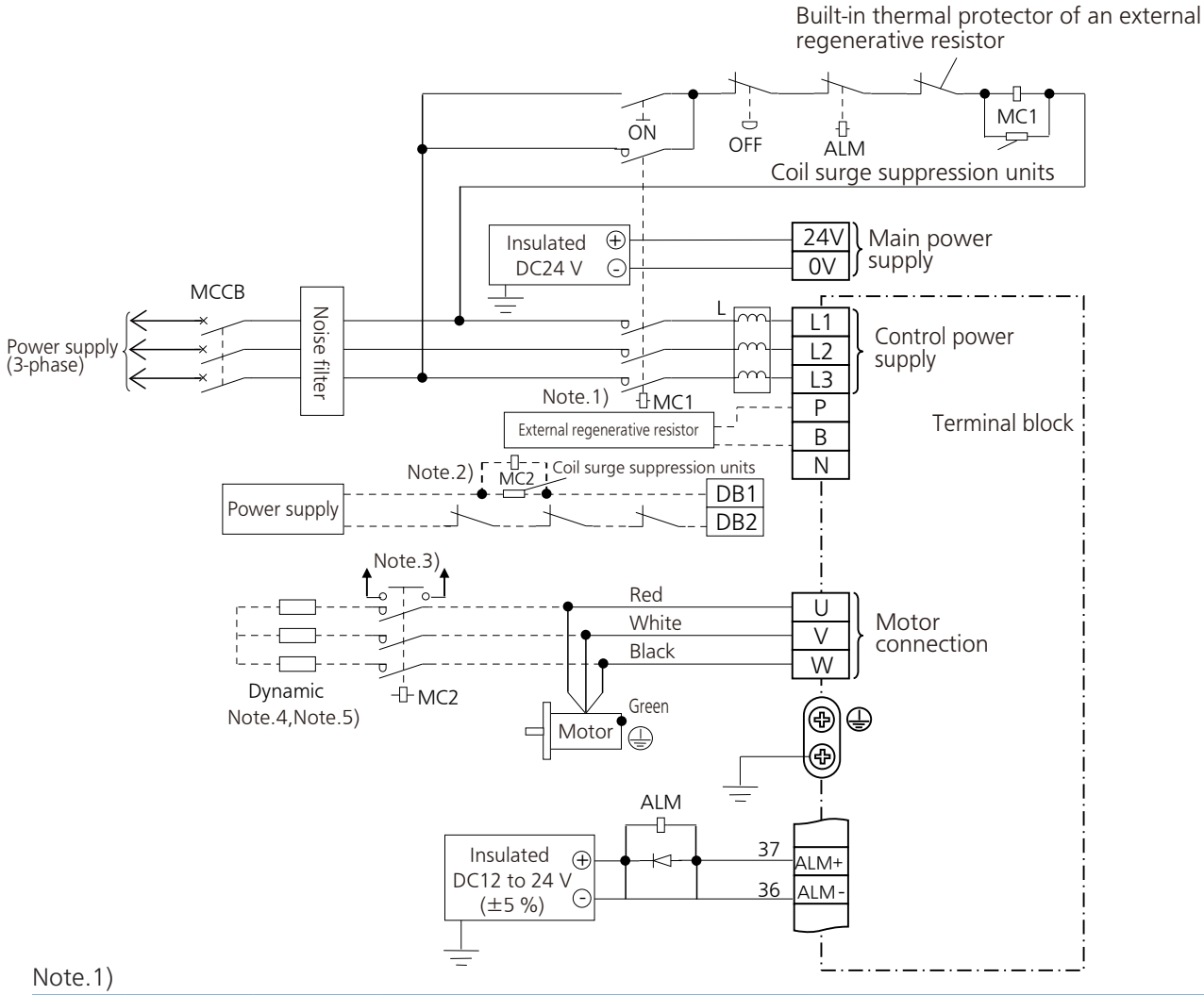

Note.1)

Frame No.	Short bar (Accessory)	Built-in regenerative resistor	Connection of the connector XC	
			In case of using an external regenerative resistor.	In case of not using an external regenerative resistor.
D,E-frame	without	without	• Connect an external regenerative resistor between P-B.	• Shorted between P-B

(Note 2) Use the same specification for Magnetic Contactor(MC2) and main circuit Magnetic Contactor(MC1).
(Note 3) Please set up auxiliary contacts to ensure that after the main contacts are melted, the servo will not enter the servo-on condition by the external control signal.
(Note 4) Please use dynamic brake resistor of 4.8 Ω 400W. Dynamic brake resistor, etc. should be installed on incombustible materials such as metals.
(Note 5) After the thermal protector is installed on the dynamic brake resistor, the thermal protector condition can be monitored by the host I/O to ensure that when the thermal protector operates, the servo will not enter the servo-on condition by the external control signal.

Note The wiring indicated with the broken line shall be provided only when required.

Related page • P.2-56 "Specifications of Motor connector"

When leadwire type was be used

- When the motors of <MSMF, MQMF, MHMF> are used, they are connected as shown below.

  Connector: Made by Tyco Electronics k.k, (The figures below show connectors for the motor.)

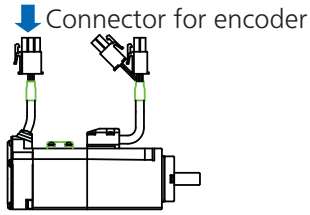

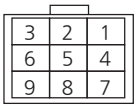

172169-1

PIN No.	Application
1 *	BAT+
2 *	BAT-
3	FG(SHIELD)
4	PS
5	PS
6	NC
7	E5V
8	E0V
9	NC

*When use absolut encoder (multi-turn data is not used) or battery-less absolute encoder, do not connect to 1-pin and 2-pin.

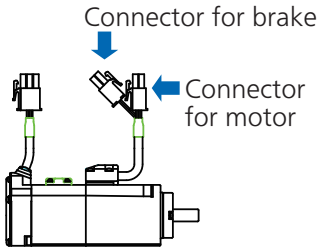

<Connector for motor>

172167-1

PIN No.	Application
1	U-phase
2	V-phase
3	W-phase
4	Ground

<Connector for brake>

172165-1

PIN No.	Application
1	Brake
2	Brake

When connector type was be used

- When the motors of <MSMF, MQMF, MHMF(50 W to 1.0 kW)> are used, they are connected as shown below.

  Connector: Made by Japan Aviation Electronics Industry, Ltd. (The figures below show connectors for the motor.)

  * Do not remove the gasket supplied with the junction cable connector. Securely install the gasket in place. Otherwise, the degree of protection of IP67 will not be guaranteed.

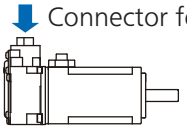

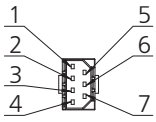

JN6CR07PM2
JN6CR07PM4

PIN No.	Application
1	FG(SHIELD)
2 *	BAT−
3	E0V
4	$\overline{\text{PS}}$
5 *	BAT+
6	E5V
7	PS

*When use absolut encoder (multi-turn data is not used), do not connect to 2-pin and 5-pin.

Tightening torque of the screw (M2) 0.19 N•m to 0.21 N•m

*Be sure to use only the screw supplied with the connector, to avoid damage.

MSMF(50 W to 1.0 kW(□80))

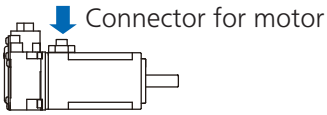

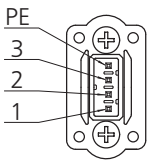

JN8AT04NJ1

PIN No.	Application
1	U-phase
2	V-phase
3	W-phase
PE	Ground

Tightening torque of the screw (M2) 0.085 N•m to 0.095 N•m (screwed to plastic)

*Be sure to use only the screw supplied with the connector, to avoid damage.

[Motor with brake]

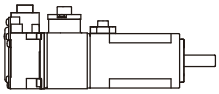

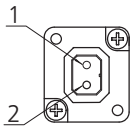

JN4AT02PJM-R

PIN No.	Application
1	Brake
2	Brake

* Electromagnetic brake is a nonpolar device.

Tightening torque of the screw (M2) 0.19 N•m to 0.21 N•m

*Be sure to use only the screw supplied with the connector, to avoid damage.

Remarks Do not connect anything to NC.

MHMF(50 W, 100 W)

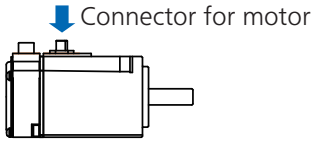

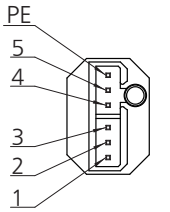

JN11AH06NN2

PIN No.	Application
1	U-phase
2	V-phase
3	W-phase
4	NC
5	NC
PE	Ground

Tightening torque of the screw (M2) 0.085 N•m to 0.095 N•m (screwed to plastic)

*Be sure to use only the screw supplied with the connector, to avoid damage.

[Motor with brake]

Connector for motor and brake

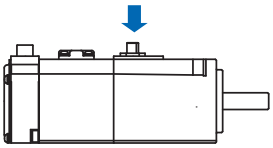

PIN No.	Application
1	U-phase
2	V-phase
3	W-phase
4	Brake
5	Brake
PE	Ground

*Electromagnetic brake is a nonpolar device.

MQMF, MHMF(200 W to 1.0 kW(□80))

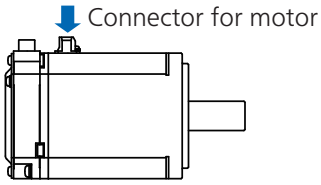

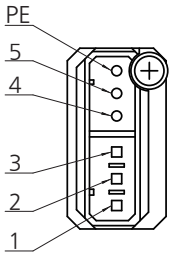

JN11AH06NN1

PIN No.	Application
1	U-phase
2	V-phase
3	W-phase
4	NC
5	NC
PE	Ground

Tightening torque of the screw (M2) 0.085 N•m to 0.095 N•m (screwed to plastic)

*Be sure to use only the screw supplied with the connector, to avoid damage.

[Motor with brake]

Connector for motor and brake

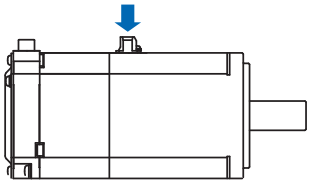

PIN No.	Application
1	U-phase
2	V-phase
3	W-phase
4	Brake
5	Brake
PE	Ground

*Electromagnetic brake is a nonpolar device.

Remarks Do not connect anything to NC.

- When the motors of <MSME(1.0 kW(□100) to 5.0 kW), MDMF, MGMF, MHMF(1.0 kW(□130) to 22.0 kW)> are used, they are connected as shown below.
  Connector: Made by Japan Aviation Electronics Industry, Ltd. (The figures below show connectors for the motor.)

- Connector for encoder

Connector for encoder
(Large type) JL10

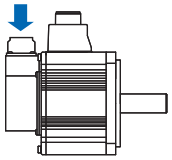

Connector for encoder
(Small type) LN2

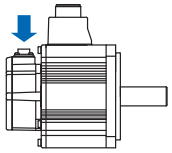

<Encoder connector JL10> <Encoder connector JN2>

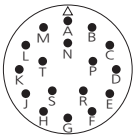

JL10-2A20-29P

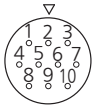

JN2AS10ML3-R

PIN No.	Application
A	NC
B	NC
C	NC
D	NC
E	NC
F	NC
G	E0V
H	E5V
J	FG(SHIELD)
K	PS
L	$\overline{PS}$
M	NC
N	NC
P	NC
R	NC
S *	BAT−
T *	BAT+

PIN No.	Application
1	E0V
2	NC
3	PS
4	E5V
5 *	BAT−
6 *	BAT+
7	$\overline{PS}$
8	NC
9	FG(SHIELD)
10	NC

*When use absolut encoder (not using multi-rotation data) or battery-less absolute encoder, do not connect to 5-pin and 6-pin.

Remarks Do not connect anything to NC.

*For absolute encoders (not using multi-turn data) and batteryless absolute encoders, 1-pin and 2-pin connections are not required.

- Connector for motor/brake
  Table of Connector for motor and Connector for brake

Motor model	Motor capacity	200V without Brake	200V with Brake
MSMF	1.0 kW(□100) to 2.0 kW	A	C
	3.0 kW to 5.0 kW	B	D
MDMF	1.0 kW to 2.0 kW	A	C
	3.0 kW to 5.0 kW	B	D
	7.5 kW to 15.0 kW	E	E, G
	22.0 kW	F	F, G

Motor model	Motor capacity	200V without Brake	200V with Brake
MGMF	850 W to 1.8 kW	A	C
	2.9 kW, 4.4 kW	B	D
	5.5 kW	E	E, G
MHMF	1.0 kW(□130) to 1.5 kW	A	C
	2.0 kW to 5.0 kW	B	D
	7.5 kW	E	E, G

Connector for motor

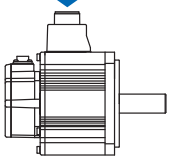

Connector for brake
Connector for motor

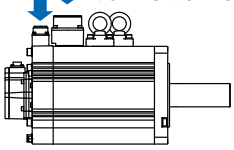

Connector for brake
Terminal box

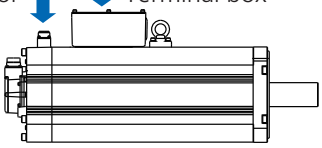

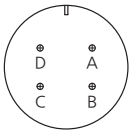

A
JL10-2E20-4PE-B
B
JL10-2E22-22PE-B

PIN No.	Application
A	U-phase
B	V-phase
C	W-phase
D	Ground

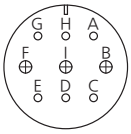

C
JL10-2E20-18PE-B

PIN No.	Application
G	with Brake: Brake
	without Brake: NC
H	with Brake: Brake
	without Brake: NC
A	NC
F	U-phase
I	V-phase
B	W-phase
E	Ground
D	Ground
C	NC

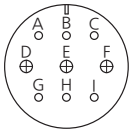

D
JL10-2E24-11PE-B

PIN No.	Application
A	with Brake: Brake
	without Brake: NC
B	with Brake: Brake
	without Brake: NC
C	NC
D	U-phase
E	V-phase
F	W-phase
G	Ground
H	Ground
I	NC

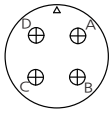

E
JL04V-2E32-17PE-B-R

PIN No.	Application
A	U-phase
B	V-phase
C	W-phase
D	Ground

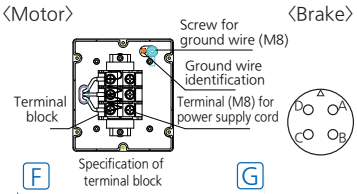

F
BN100W

PIN No.	Application
U	U-phase
V	V-phase
W	W-phase

G
N/MS3102A 14S-2P

PIN No.	Application
A	Brake
B	Brake
C	NC
D	NC

Remarks Do not connect anything to NC.

● The connection when using a <400 V specification MSMF (200 W to 1.0 kW (☐ 80))> motor is as follows.
Connector: Made by Tyco Electronics (The figure below shows the connector on the motor side.)

■ Connector for encoder / Connector for motor

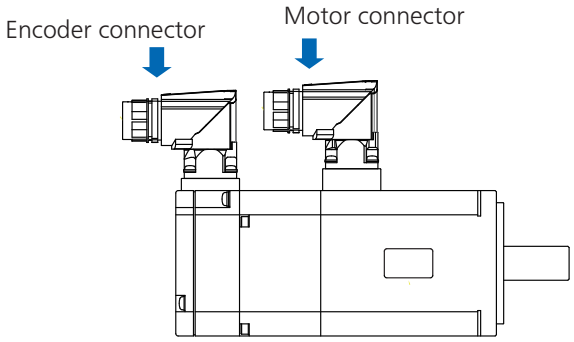

<Encoder connector>

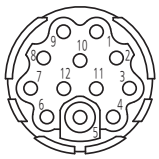

Encoder:
AGC047N0000050A000

PIN No.	Single	
	Batteryless Absolute	Absolute
1	E0 V	E0 V
2	E5 V	E5 V
3	PS(SD)	PS(SD)
4	PS(SD)	PS(SD)
5	NC	NC
6	NC	NC
7	NC	BAT-
8	NC	BAT+
9	FG	FG
10	NC	NC
11	NC	NC
12	NC	NC

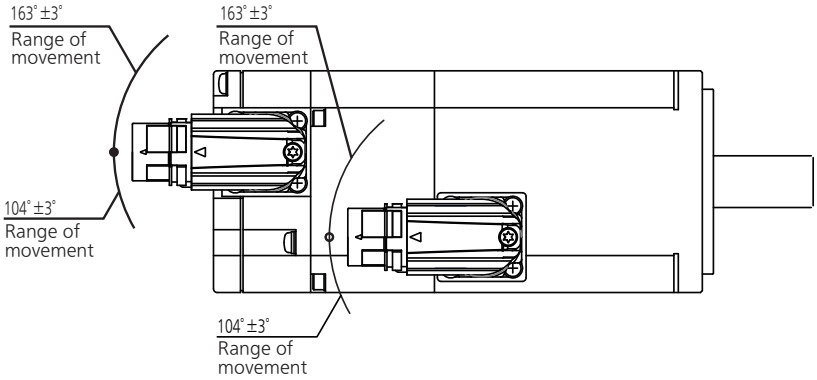

<Motor connector>

Motor:
BGC863N0000051A000

PIN No.	Single	
	No brake	With brake
1	NC	Break
2	U	U
3	V	V
4	W	W
5	NC	Break
6	NC	NC
E	GND	GND

Remarks

- Motor connectors and encoder connectors have a limited range of motion
- Do not move beyond the limit

● The connection when using a <400 V specification MSMF, MDMF, MHMF, MGMF, MHMF (1.0 kW (□ 100) to 5.0 kW)> motor is as follows.
Connector: Made by Tyco Electronics (The figure below shows the connector on the motor side.)

■ Connector for encoder

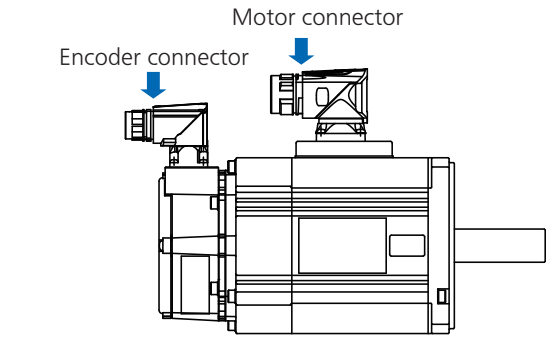

<Encoder connector>

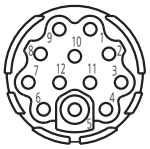

Encoder:
AGC047N0000050A000(TE)

PIN No.	Single
1	E0 V
2	E5 V
3	PS(SD)
4	PS(SD)
5	NC
6	NC
7	BAT -
8	BAT +
9	FG
10	NC
11	NC
12	NC

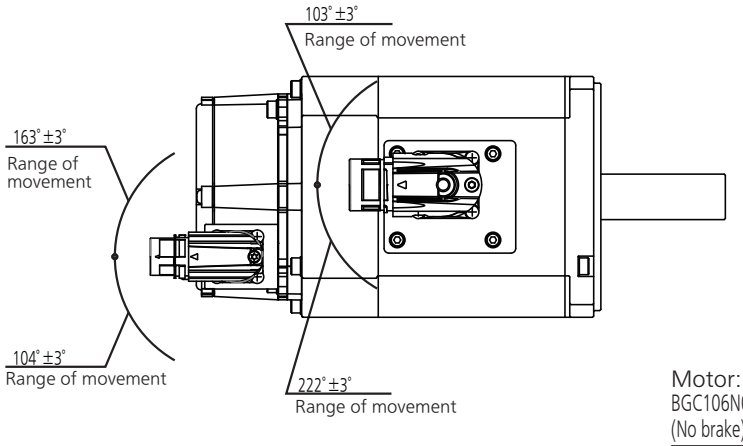

<Motor connector>

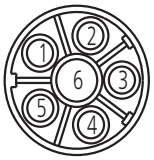

Motor:
BGC106N00001100000(TE)
(No brake)

PIN No.	Single
1	NC
2	NC
3	E
4	U
5	V
6	W

Motor:
BGC106N00001100000(TE)
(With brake)

PIN No.	Single
1	Break
2	Break
3	E
4	U
5	V
6	W

Remarks

- Motor connectors and encoder connectors have a limited range of motion
- Do not move beyond the limit.

2. System Configuration and Wiring

Wiring method to connector

• Follow the procedures below for the wiring connection to the Connector XA, XB, XC and XD.

How to connect

1. Peel off the insulation cover of the cable.
   • For single wire (Please obey the length in figure.)
   • For stranded wires (ferrules must be used as illustrated below).

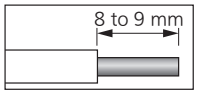

Example: Ferrules with plastic insulating sleeve
(AI series, Phoenix Contact, Ltd.)

1) Peel off the sheath so that the conductor portion of the cable will protrude from the tip of the ferrule. (It should protrude 1 mm or more from the ferrule.)
2) Insert the cable into the ferrule and crimp it with an appropriate crimping tool.
3) After crimping, cut off the cable conductor portion protruding from the ferrule. (The allowable protruding length after cutting should be 0 to 0.5 mm.)
   • Part No. of the crimping tool:
     CRIMPFOX U-D66 (1204436)
     Available from Phoenix Contact, Ltd.

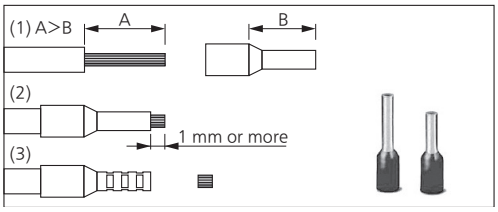

Examples: Nylon-insulated ferrule
(NTUB series, J.S.T. Mfg. Co., Ltd.)
Vinyl-insulated ferrule
(VTUB series, J.S.T. Mfg. Co., Ltd.)

1) Peel off the sheath of the cable conductor portion to the length equal to that of sheath on the ferrule.
2) Insert the cable into the ferrule and crimp it with an appropriate crimping tool.
   • Part No. of the crimping tool: YNT-1614
     Available from J.S.T. Mfg. Co., Ltd

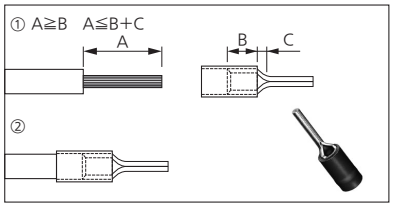

• When peeling off the sheath of the cable, take care not to damage other portions.
• When crimping the ferrule, sufficiently check the status of the ferrule and cable. If the conductors of the cable stick out from the insulation cover or protrude excessively from the tip of the ferrule, accidents such as an electric shock and fire from a short circuit may result.

A to C (100 V/200 V), D (200 V) specifications
<Cables Compatible with Connector>
Conductor Size AWG18 to 14
Sheath Outline ø2.1 mm to ø3.8 mm
<Recommended Connector Bar Terminal>
Conductor Size AWG18
Terminal Model Number AI0.75-8GY (Phoenix Contact, Ltd.)

E (200 V) specifications
<Cables Compatible with Connector>
Conductor Size AWG18 to 12
Sheath Outline ø2.1 mm to ø4.2 mm
<Recommended Connector Bar Terminal>
Conductor Size AWG16 to 14
Terminal Model Number VTUB-2 or NTUB-2 (J.S.T. Mfg. Co., Ltd)

400 V specifications
XA, XB, XC
<Cables Compatible with Connector>
Conductor Size AWG18 to 12
Sheath Outline ø2.1 to 4.2 mm
<Recommended Connector Bar Terminal>
Conductor Size AWG16 to 14
Terminal Model Number VTUB-2 or NTUB-2(J.S.T. Mfg. Co., Ltd)

XD
<Cables Compatible with Connector>
Conductor Size AWG24 to 20
Sheath Outline ø1.2 to 2.6 mm
<Recommended Connector Bar Terminal>
Conductor Size AWG24 to 22
Terminal Model Number VTUB-0.5(J.S.T. Mfg. Co., Ltd)

2. Insert the cable to the connector in the following 2 methods.
   (a) Insert the cable using the supplied handle lever.
   (b) Insert the cable using a flat-blade screwdriver (Edge width: 3.0 mm to 3.5 mm).

(a) Using handle lever			(b) Using screw driver		
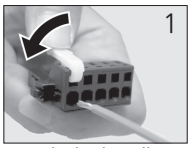	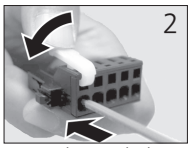	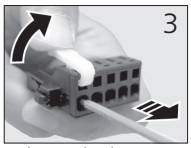	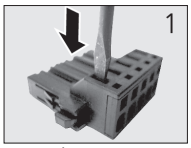	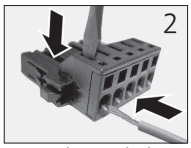	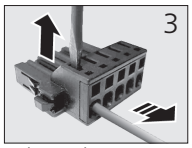
Attach the handle lever to the handling slot on the upper portion. Press down the lever to push down the spring.	Insert the peeled cable while pressing down the lever, until it hits the insertion slot (round hole).	Release the lever.	Press the screw driver to the handling slot on the upper portion to push down the spring.	Insert the peeled cable while pressing down the screw driver, until it hits the insertion slot (round hole).	Release the screw driver.
* You can pull out the cable by pushing down the spring as the above.					

- Take off the connector from the Servo Driver before making connection.
- Insert only one cable into each one of cable insertion slot.
- Pay attention to injury by screw driver.
- Please keep the operating lever after use.

3. Wiring to the connector, X1

Connecting host computer

SE	SG	SF
○	○	○

This is used for USB connection to a personal computer. It is possible to change the parameter setting and perform monitoring.

Application	Symbol	Connector Pin No.	Contents
USB signal terminal	VBUS	1	Use for communication with personal computer.
	D−	2	
	D+	3	
	—	4	Do not connect.
	GND	5	Connected to ground of control circuit.

Caution Use commercially available USB mini-B connector for the driver.

4. Wiring to the connector, X2

Connecting communication connector

SE	SG	SF
	○	○

This is used for connection to the host controller when two or more units are used. RS232 and RS485 interfaces are supplied.

Application	Symbol	Connector Pin No.	Contents
Signal ground	GND	1	Connected to ground of control circuit.
NC	–	2	Do not connect.
RS232 signal	TXD	3	RS232 The transmission / reception method.
	RXD	4	
RS485 signal	485 −	5	RS485 The transmission / reception method.
	485+	6	
	485 −	7	
	485+	8	
Frame ground	FG	Shell	Connected with protective earth terminal in the servo driver.

Connector (plug): CIF-PCNS08KK-072R (optional, available from J.S.T Mfg)

[Connector pin assignment]

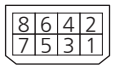

(Viewed from cable)

Remarks
- X1 to X6 are used for the secondary circuit. To connect these terminals to the primary power supply (particularly, the 24 VDC power supply for brake), insulation is required.
  Do not connect these terminals to the same power supply.

Related page
- P.7-178 “Connector Kit for Communication Cable (for RS485, RS232)”

- This servo driver features 2 kinds of communication function, RS232 and RS485, and you can use in 3 connecting methods.

To communicate with a single driver through RS232

Connect the host (PC or controller) to an driver through RS232.

[How to connect]

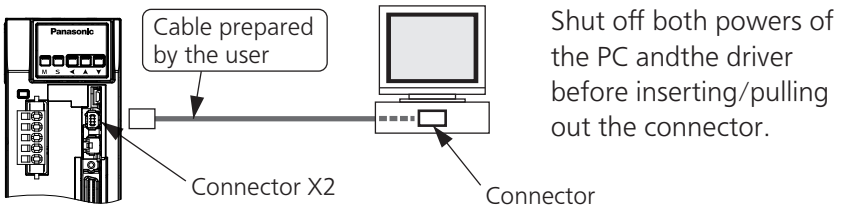

To communicate with multiple drivers through RS232 and RS485

By connecting the host (PC and host controller) and one driver via RS232 and connecting other drivers via RS485 each other, you can connect multiple drivers.

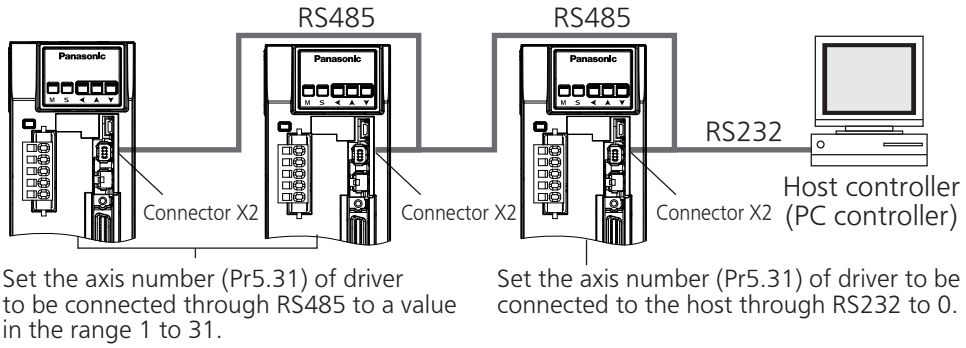

Note
- You can connect up to 32 drivers with the host.
- For details, refer to P.7-28, "Communication"of Supplement.

To communicate with multiple drivers only through RS485

Communications between the host (PC or controller) and multiple drivers can be made through RS485.

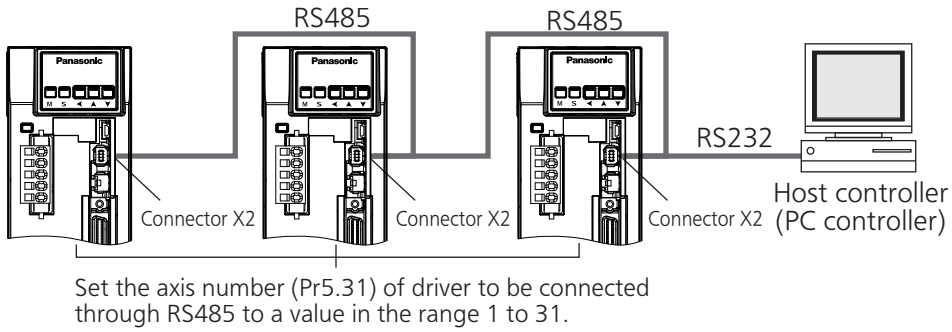

Note
- You can connect up to 31 drivers with the host.
- For details, refer to P.7-28, "Communication"of Supplement.

Remarks
- X1 to X6 are used for the secondary circuit. To connect these terminals to the primary power supply (particularly, the 24 VDC power supply for brake), insulation is required. Do not connect these terminals to the same power supply.

5. Wiring to the connector, X3

Safety function connector

SE	SG	SF
		○

A safety by-pass plug is supplied as standard equipment. Do not disconnect it in normal times.
When controlling the safety function from the connected host controller, accessory connector cannot be used. Prepare and wire the connector (option) as specified below.
Since the standard connector cannot be used when controlling the safety function from the host controller, purchase the optional connector and make connection as shown below. When you do not configuring a safety circuit, please use the safety bypass plug of accessory to the driver.
For wiring of the safety bypass plug supplied with the driver, refer to the figure below.

Application	Symbol	Connector Pin No.	Contents
NC	–	1	Do not connect.
	–	2	
Safety input 1	SF1 –	3	These are two independent circuits that turn off the operation signal to the power module to shut off the motor current.
	SF1+	4	
Safety input 2	SF2 –	5	
	SF2+	6	
EDM output	EDM –	7	This is an output for monitoring the failure of the safety function.
	EDM+	8	
Frame ground	FG	Shell	Connected with protective earth terminal in the servo driver.

Connector (plug): CIF-PCNS08KK-071R (optional, available from J.S.T Mfg)

[Connector pin assignment]

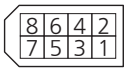

(Viewed from cable)

Safety bypass plug supplied with the driver (internal wiring)

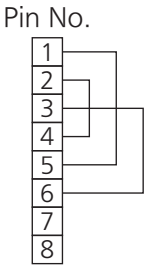

Wiring if the safety circuit is not configured.
When using the safety function, do not make these connections.

In order to achieve the safety level to SIL 3, PL e, DCavg Medium, the EDM output is needed for diagnosis (maximum interval of diagnosis is 3 months).
If not diagnosed by EDM output, then safety level is SIL 2, PL d, DCavg Low.

Remarks
- X1 to X6 are used for the secondary circuit. To connect these terminals to the primary power supply (particularly, the 24 VDC power supply for brake), insulation is required. Do not connect these terminals to the same power supply.

Caution
- Disconnecting this connector during operation results in immediate stop.

Related page
- P.7-178 “Connector Kit for Safety”

6. Wiring to the connector, X4

Connection to Host Controller

SE	SG	SF
○	○	○

Tips on wiring

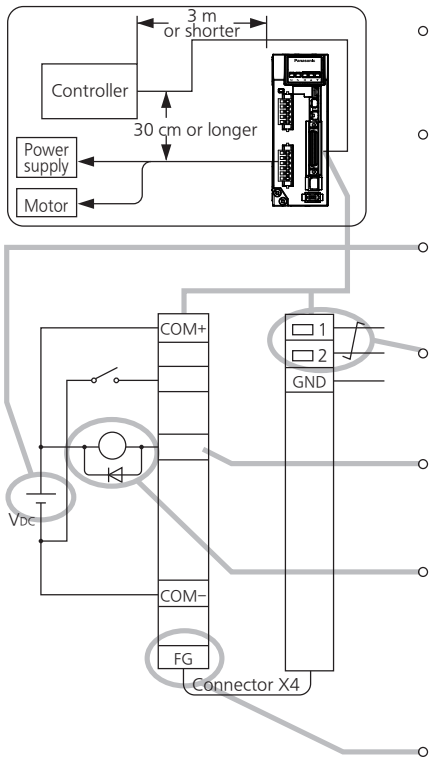

- Peripheral apparatus such as host controller should be located within 3 m.
- Separate the main circuit at least 30 cm away. Don't pass them in the same duct, nor bind them together.
- Power supply for control signals (VCC) between COM+ and COM− (VDC) should be prepared by customer.
- Use shield twisted pair for the wiring of command pulse input and encoder signal output.
- Don't apply more than 24 V to the control signal output terminals, nor run 50 mA or more to them.
- When the relay is directly driven by the control output signals, install a diode in parallel with a relay, and in the direction as the Fig. shows. The driver might be damaged without a diode installment, or by reverse direction.
- Frame ground (FG) and the shell of connector is connected to the earth terminal inside of the driver.

Related page

- For details, refer to P.3-24, “Wiring Diagram to the connector, X4” and P.3-34, “Inputs and outputs on connector X4” .
- Specifications of the Connector, X4

Connecter to be prepared by customer		Manufacturer
Part name	Part No.	
Connecter (soldering type)	DF02P050F22A1	Japan Aviation Electronics Ind.
Connector cover	DF02D050B22A	
or		
Connecter (soldering type)	54306-5019	Molex Inc.
Connector cover	54331-0501	
or		
Connecter (soldering type)	10150-3000PE	Sumitomo 3M
Connector cover	10350-52A0-008	

or equivalent.

Note

- For details, refer to P.7-176, “Connector Kit” of Supplement.

Remarks

- Tightening torque of the screws for connector (X4) for the connection to the host to be 0.2 ± 0.05 N·m. Larger tightening torque than these may damage the connector at the driver side.

Remarks

- X1 to X6 are used for the secondary circuit. To connect these terminals to the primary power supply (particularly, the 24 VDC power supply for brake), insulation is required. Do not connect these terminals to the same power supply.

7. Wiring to the connector, X5

Connect on to External Scale

SE	SG	SF
		○

Provide a power supply for the external scale on your part or use the following power output (250 mA or less).

Application	Symbol	Connector Pin No.	Contents
Power supply output	EX5V	1	Supply the power of external scale or A, B, Z phase encoder.
	EX0V	2	Connected to ground of control circuit.
I/F of external scale signals	EXPS	3	Serial signal The transmission / reception method.
	/EXPS	4	
A, B, Z phase Endoder signal input	EXA	5	Parallel signal reception Correspondence speed : 4 Mpps (after quadruple)
	/EXA	6	
	EXB	7	
	/EXB	8	
	EXZ	9	
	/EXZ	10	
Frame ground	FG	Shell	Connected with protective earth terminal in the servo driver.

Connector (plug) sirial external signal: MUF-PK10K-X (by J.S.T. Mfg. Co., Ltd.)

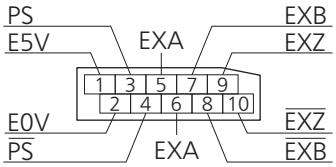

(Viewed from cable)

- Caution

1) Unit can accommodate two incremental and absolute type as the corresponding serial signals for external scale.Please is whether or not the external scale is your maker is available at our website.

2) Recommended external scale ratio is 1/40 ≤ External scale ratio ≤ 1280

If you set up the external scale ratio to smaller value than 50/position loop gain (Pr1.00 and Pr.1.05), you may not be able to control per 1 pulse unit, even if within the range as described above. Setup of larger scale ratio may result in larger noise.

Remarks
- X1 to X6 are used for the secondary circuit. To connect these terminals to the primary power supply (particularly, the 24 VDC power supply for brake), insulation is required. Do not connect these terminals to the same power supply.

Related page
- P.4-7 “Details of Parameter”
- P.7-179 “Connector Kit for External Scale”

Wiring Diagram of X5

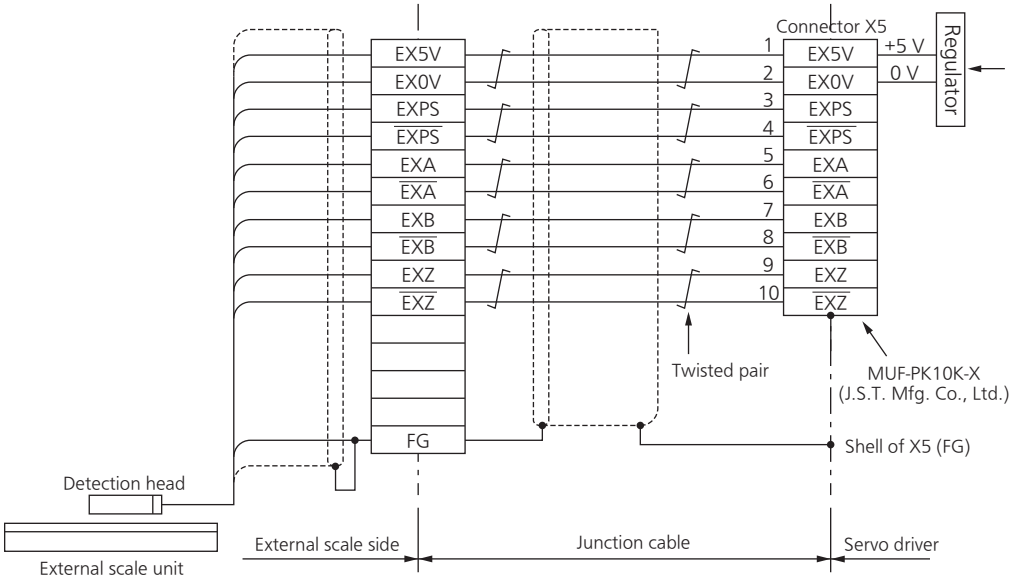

How to Wiring

Wire the signals from the external scale to the external scale connector, X5.

1) Cable for the external scale to be the twisted pair with bundle shielding and to having the twisted core wire with diameter of 0.18 mm2.
2) Cable length to be max. 20 m. Double wiring for 5 V power supply is recommended when the wiring length is long to reduce the voltage drop effect.
3) Connect the outer film of the shield wire of the external scale to the shield of the junction cable. Also connect the outer film of the shield wire to the shell (FG) of connector X5 of the driver without fail.
4) Separate the wiring from the power line (L1, L2, L3, L1C, L2C, U, V, W, ⏚) as much as possible (30 cm or more). Do not pass these wires in the same duct, nor bundle together.
5) Do not connect anything to the vacant pins of X5.
6) The maximum power available from the connector X5 is 250 mA at 5 V ± 5 %. If you use an external scale requiring more power, you should provide the suitable power source by yourself. Some external scales need longer initialization period after power up. Your design should meet this operation timing after power up.
7) When driving the external scale from an external power supply, keep the EX5V pin open circuit so that it does not receive any external voltage. Connect the GND circuit (0 V) to EX0V (connector X5, pin 2) of the driver to eliminate potential difference.

Input circuit

- EXA, EXB, EXZ input circuit

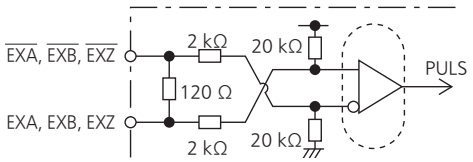

Remarks

- X1 to X6 are used for the secondary circuit. To connect these terminals to the primary power supply (particularly, the 24 VDC power supply for brake), insulation is required. Do not connect these terminals to the same power supply.

8. Wiring to the connector, X6

Connection to Encoder

SE	SG	SF
○	○	○

Tips on Wiring

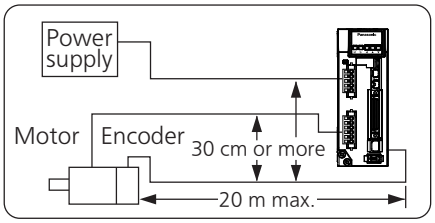

- Maximum cable length between the driver and the motor to be 20 m. Consult with a dealer or distributor if you want to use the longer cable than 20 m. (Refer to the back cover.)
- Keep this wiring away from the main circuit by 30 cm or more. Don't guide this wiring through the same duct with the main, nor bind them together.
- The voltage of input power to encoder side connector should be in the range 4.75 VDC – 5.25 VDC.
- When you make your own encoder junction cable (for connectors, refer to P.7-144, "Options (Connector Kit for Encoder connection)" of Supplement.
  1) Refer to the Wiring Diagram below.
  2) Cable to be : Select cable materials so that the input voltage of the connector on the encoder side is in the range of 4.75VDC – 5.25VDC.
     battery type
     Reference
     20m or less Shielded twisted pair cable with cross section of 0.18 mm² or larger (AWG24), and with higher bending resistance.
     batteryless type
     Reference
     10m or less Shielded twisted pair cable with cross section of 0.18 mm² or larger (AWG24), and with higher bending resistance.
     10m or more Shielded twisted pair cable with cross section of 0.41 mm² or larger (AWG21), and with higher bending resistance.
  3) Use twisted pair cable for corresponding signal/power wiring.
  4) Shielding treatment
     - Shield wall of the driver side : It solders the shell of Connector X6.
     - Shield wall of the motor side :
       manufactured by JAE
       Small type motor (50 W to 750 W): connect to FG
       Large type motor (850 W to 5.0 kW): connect to FG
  5) Connect nothing to the empty terminals of each connector.

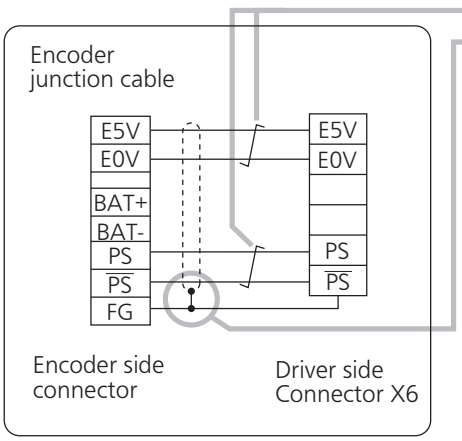

Remarks
- X1 to X6 are used for the secondary circuit. To connect these terminals to the primary power supply (particularly, the 24 VDC power supply for brake), insulation is required. Do not connect these terminals to the same power supply.

Related page
- P.7-179 "Connector Kit for Encoder"

Wiring Diagram

- In case of 23-bit absolute encoder (as mutli-turn data was be used)

●MSMF 50 W to 1.0 kW(□80), ●MQMF 100 W to 400 W, ●MHMF 50 W to 1.0 kW(□80)

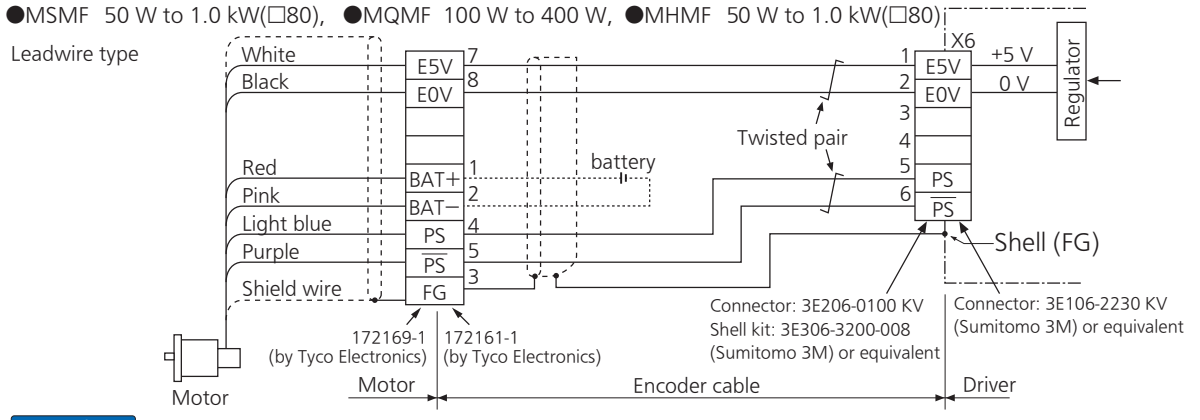

Remarks
- Connect the battery for absolute encoder across 1P and 2P of the junction connector (the figure above).
- A battery holder and a battery connection cable should be the option cable or prepared by the user.

●MSMF 50 W to 1.0 kW(□80)
●MQMF 100 W to 400 W
●MHMF 50 W to 1.0 kW(□80)

Connector type

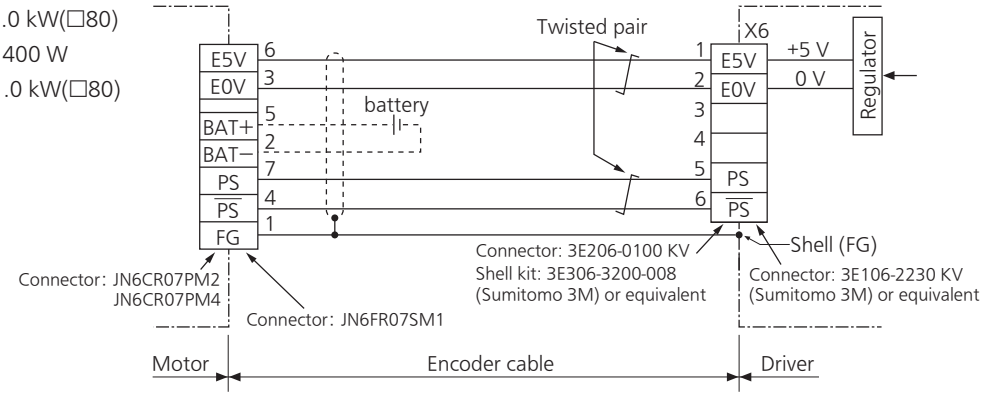

Caution
- Tighten the motor connector mounting screw (M2) with a torque between 0.19 and 0.21 N•m. To avoid damage, be sure to use only the screw supplied with the connector.
- Do not remove the gasket supplied with the junction cable connector. Securely install the gasket in place. Otherwise, the degree of protection of IP67 will not be guaranteed.

Connector pin assignment

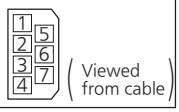

Remarks
- Connect the battery for absolute encoder across 5P and 2P of the junction connector (the figure above).
- A battery holder and a battery connection cable should be the option cable or prepared by the user.

●MSMF 1.0 kW(□100) to 5.0 kW
●MDMF 1.0 kW to 22.0 kW
●MGMF 850 W to 5.5 kW
●MHMF 1.0 kW(□130) to 7.5 kW

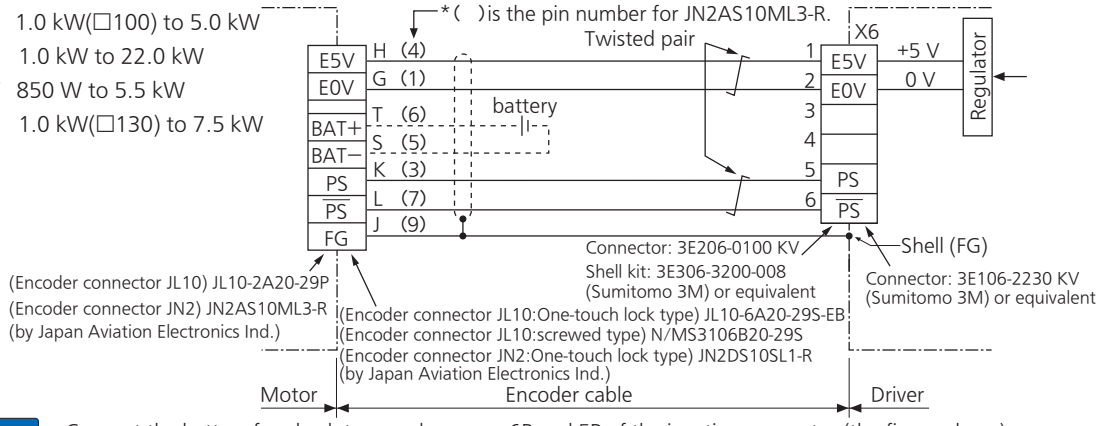

Remarks
- Connect the battery for absolute encoder across 6P and 5P of the junction connector (the figure above).
- A battery holder and a battery connection cable should be the option cable or prepared by the user.

Remarks
- X1 to X6 are used for the secondary circuit. To connect these terminals to the primary power supply (particularly, the 24 VDC power supply for brake), insulation is required. Do not connect these terminals to the same power supply.

Wiring Diagram

- In case of 23-bit absolute encoder (as single turn data was be used)

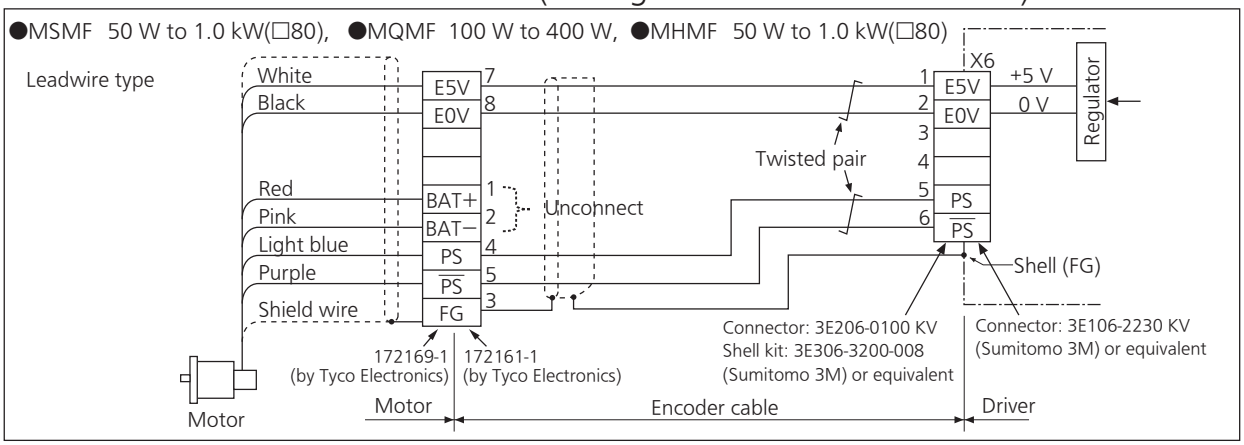

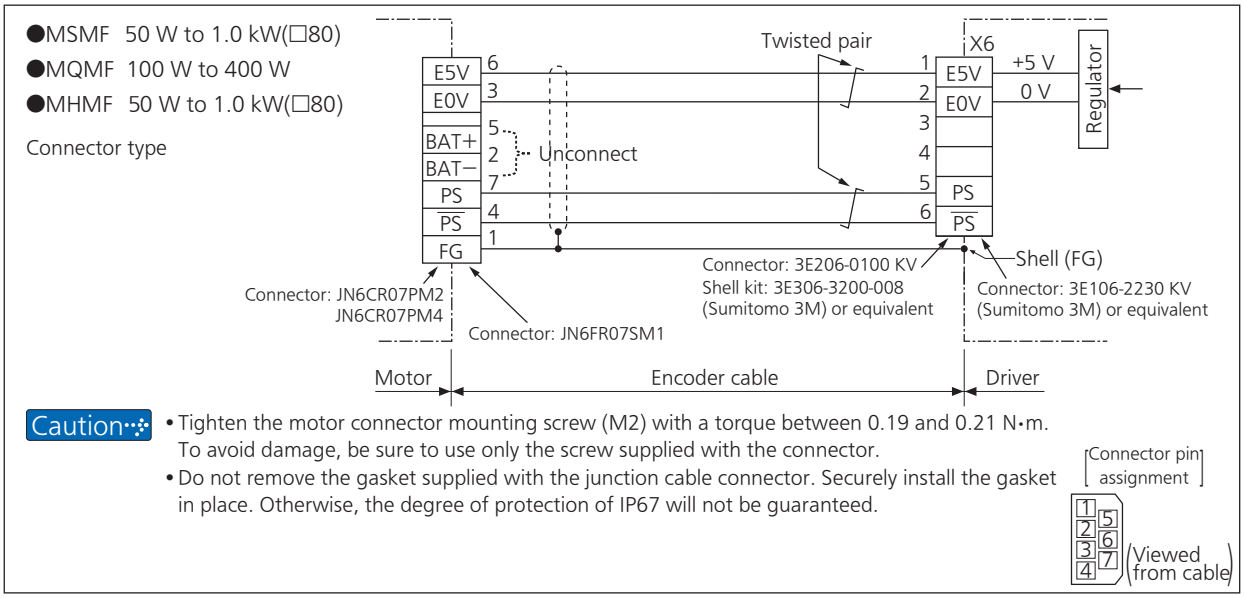

Caution

- Tighten the motor connector mounting screw (M2) with a torque between 0.19 and 0.21 N•m. To avoid damage, be sure to use only the screw supplied with the connector.
- Do not remove the gasket supplied with the junction cable connector. Securely install the gasket in place. Otherwise, the degree of protection of IP67 will not be guaranteed.

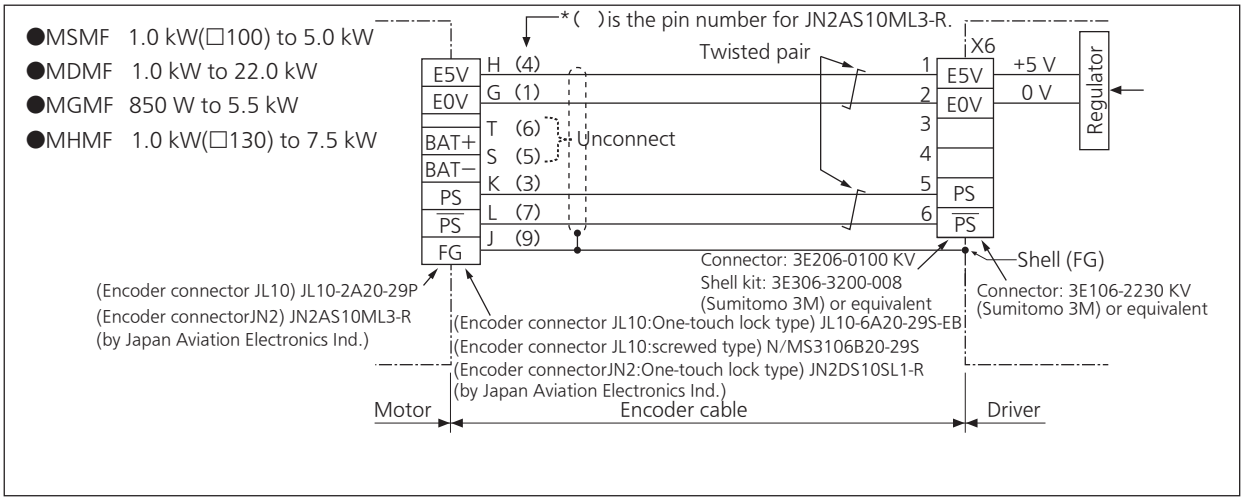

Remarks

- X1 to X6 are used for the secondary circuit. To connect these terminals to the primary power supply (particularly, the 24 VDC power supply for control, the 24 VDC power supply for brake), insulation is required.
  Do not connect these terminals to the same power supply.

- In case of 23-bit absolute batteryless encoder

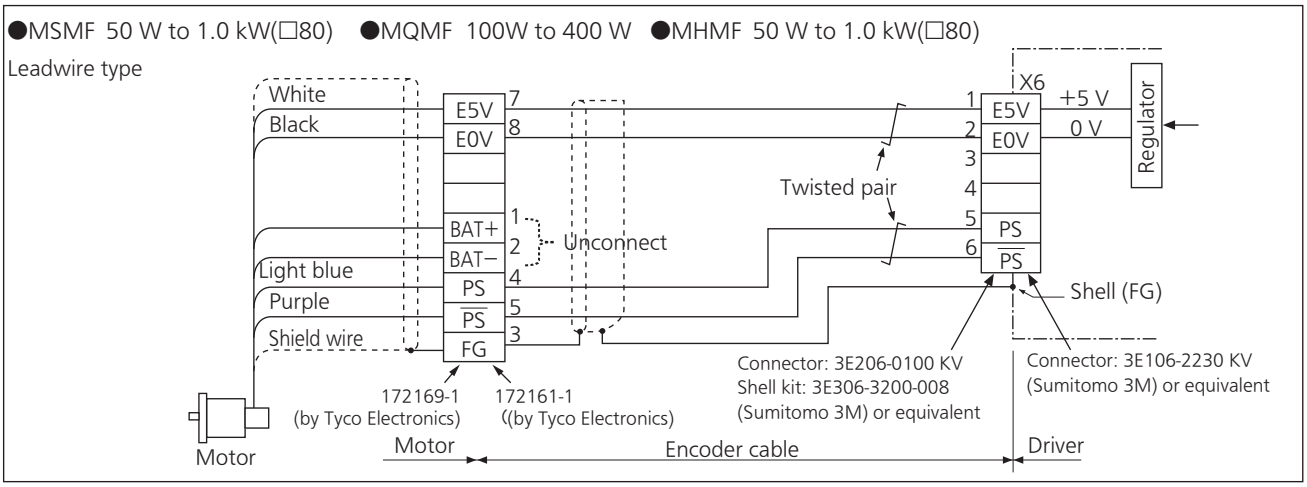

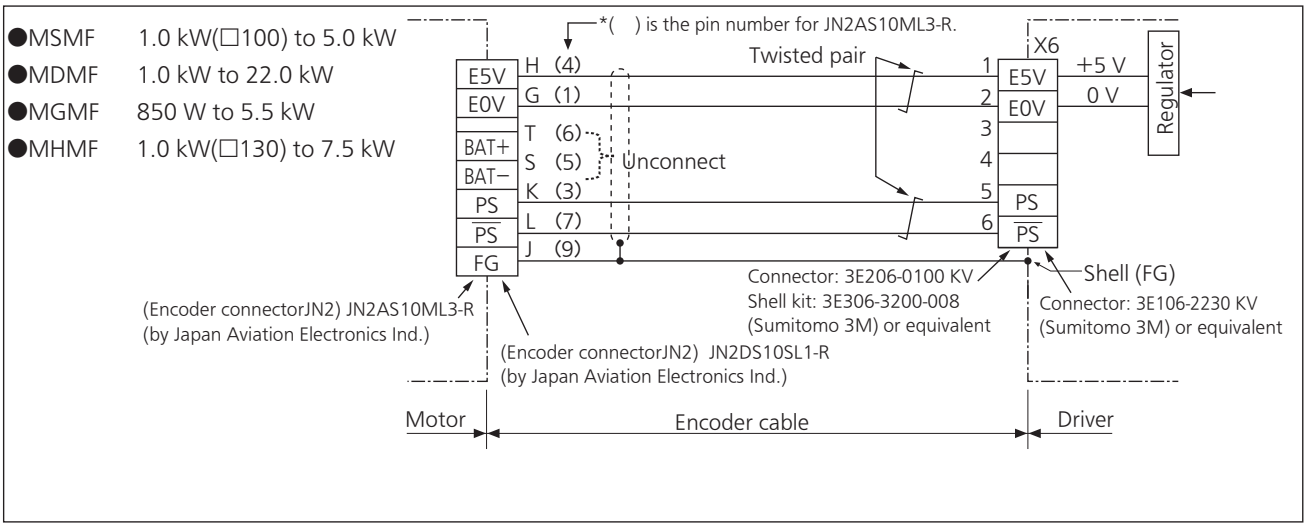

Remarks

- X1 to X6 are used for the secondary circuit. To connect these terminals to the primary power supply (particularly, the 24 VDC power supply for brake), insulation is required. Do not connect these terminals to the same power supply.

- In case of 23-bit absolute encoder(as mutli-turn data was be used)(400 V)

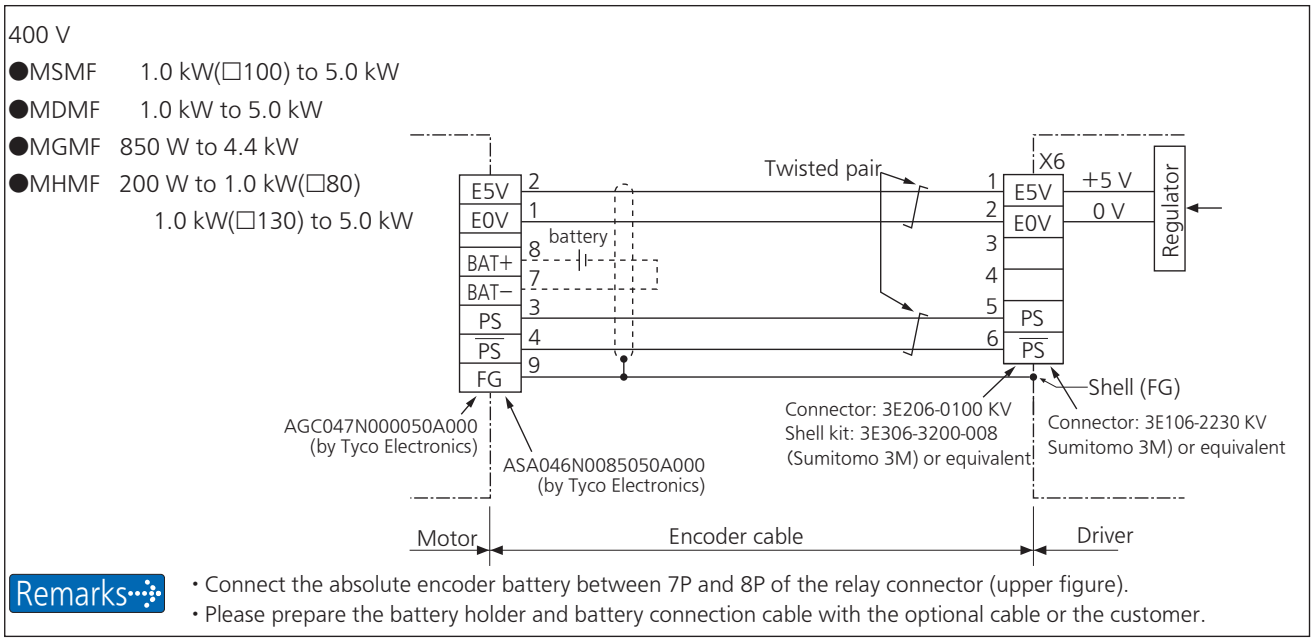

- In case of 23-bit absolute batteryless encoder(400 V)
  In case of 23-bit absolute encoder(as mutli-turn data was be not used)(400 V)

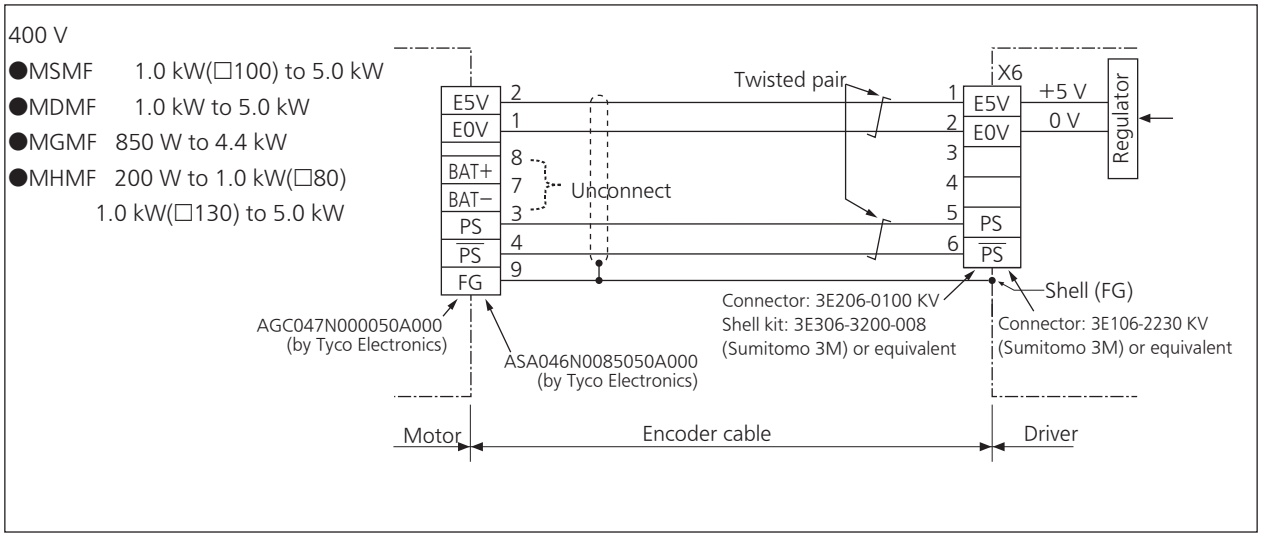

Remarks
• X1 to X6 are used for the secondary circuit. To connect these terminals to the primary power supply (particularly, the 24 VDC power supply for brake), insulation is required. Do not connect these terminals to the same power supply.

9. Timing Chart

Timing on power-up

Servo-on signal accept timing on power-up

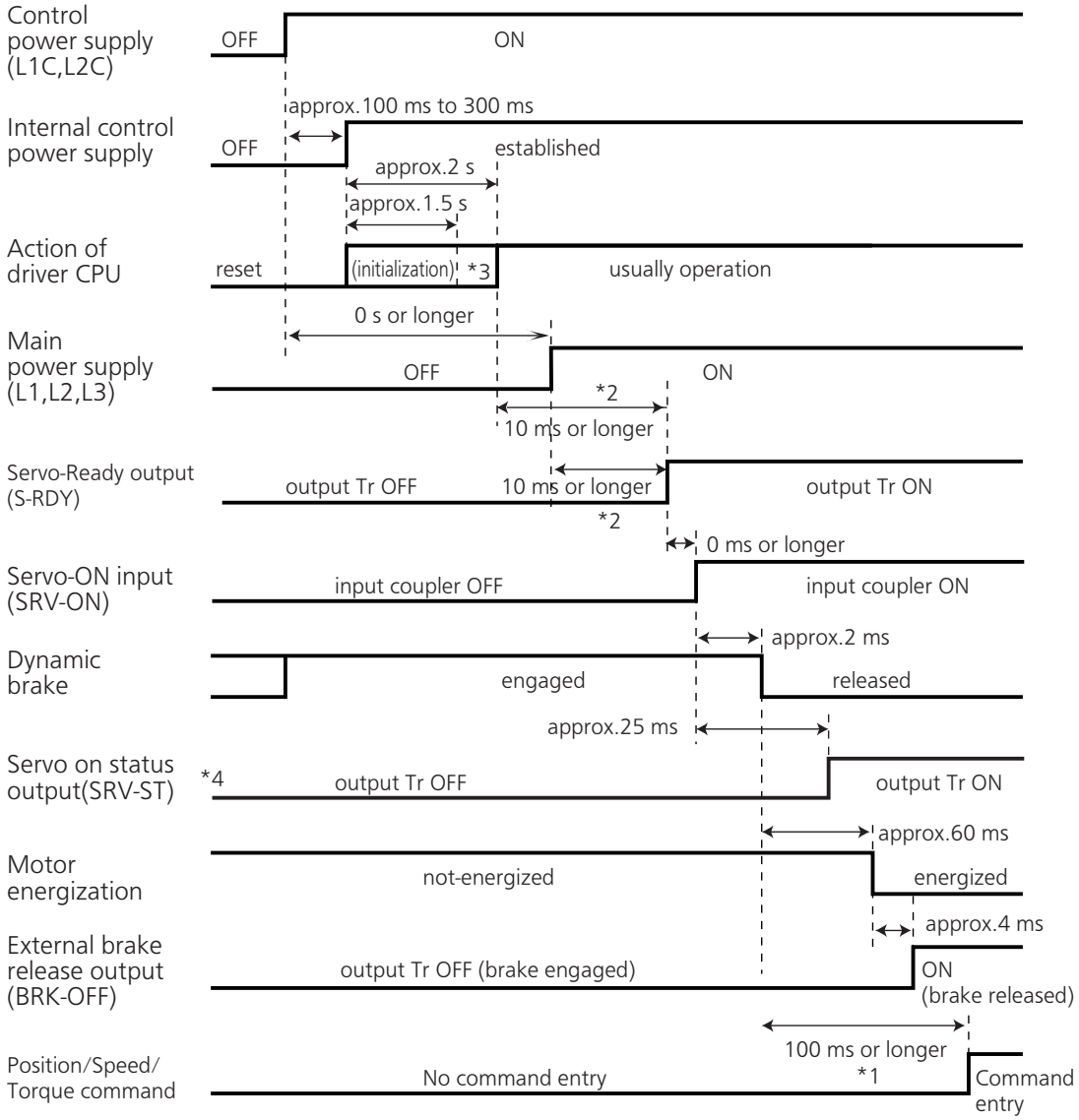

- The above chart shows the timing from AC power-ON to command input.
- Activate the external command input according to the above timing chart.

Caution

*1. In this term Servo-ON input (SRV-ON) turns ON as a hard ware, but operation command can not be received.

*2. S-RDY output will turn on when both conditions are met, initialization of micro computer has been completed and the main power has been turned on.

*3. After Internal control power supply , protective functions are active from approx. 1.5 sec after the start of initializing microcomputer. Please set the signals, especially for protective function, for example over-travel inhibit input (POT, NOT) or external scale input, so as to decide their logic until this term.
The lapse time can be changed with Pr6.18 Wait time after power-up.

*4. Servo ON status output (SRV-ST) is a signal indicating that it has received the Servo-On input; please note that it is not an indication showing command input is possible.

Related page • P.4-71 “Details of parameter”

9. Timing Chart

Alarm

When an Error (Alarm) Has Occurred (at Servo-ON Command)

● DB/Free run deceleration operation

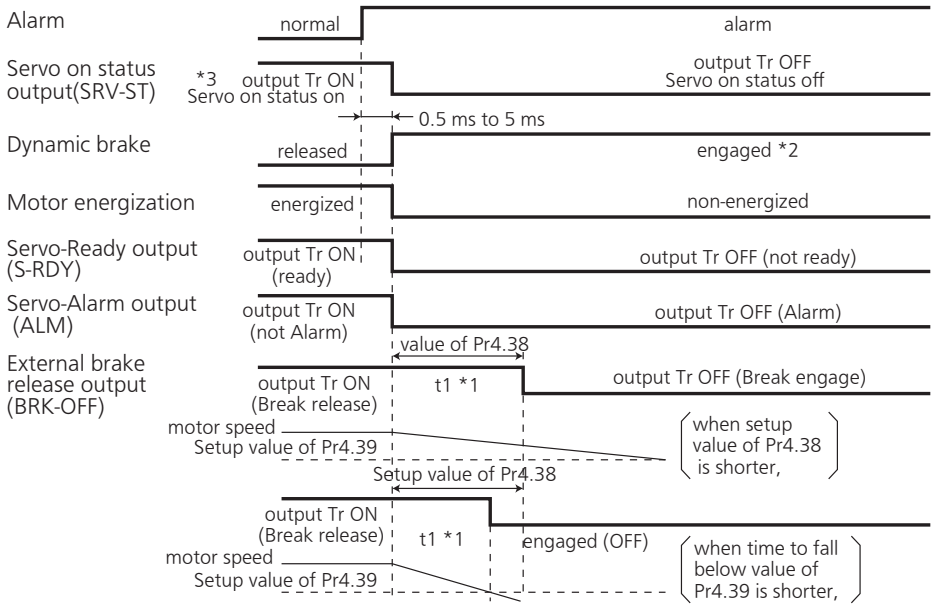

● Immediate stop operation

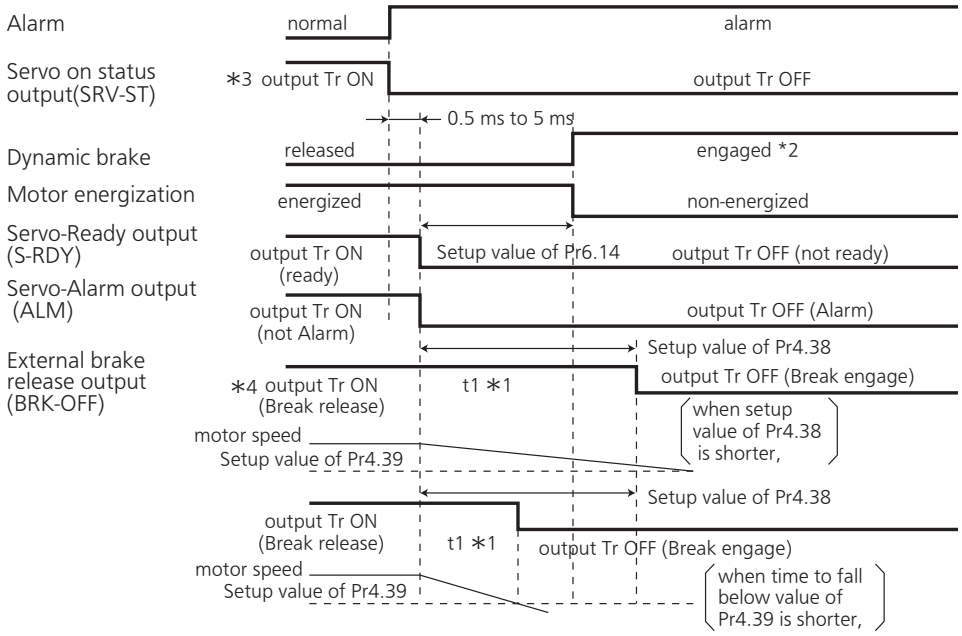

Caution

*1. t1 will be a shorter time of either the setup value of Pr4.38[Mechanical brake action at running setup] or elapsing time for the motor speed to fall below Pr4.39[Brake release speed setup].
t1 will be 0 when the motor is in stall regardless of the setup pf Pr4.37.

*2. When an alarm is generated, the dynamic brake operates according to Pr5.10 Sequence at alarm.

*3. Servo ON status output (SRV-ST) is a signal indicating that it has received the Servo-On input; please note that it is not an indication showing command input is possible.

*4. The setting where Pr4.38 “Mechanical braking setting during operation” = Pr6.14 “Immediate stop time in case of alarm” is recommended.
When set to Pr4.38 ≤ Pr6.14, the brake will be operated after lapse of Pr4.38 time. When set to Pr4.38>Pr6.14, the brake will not operate even after lapse of Pr4.38 time, but will operate when transitioned to OFF state.

When an Alarm Has Been Cleared (at Servo-ON Command)

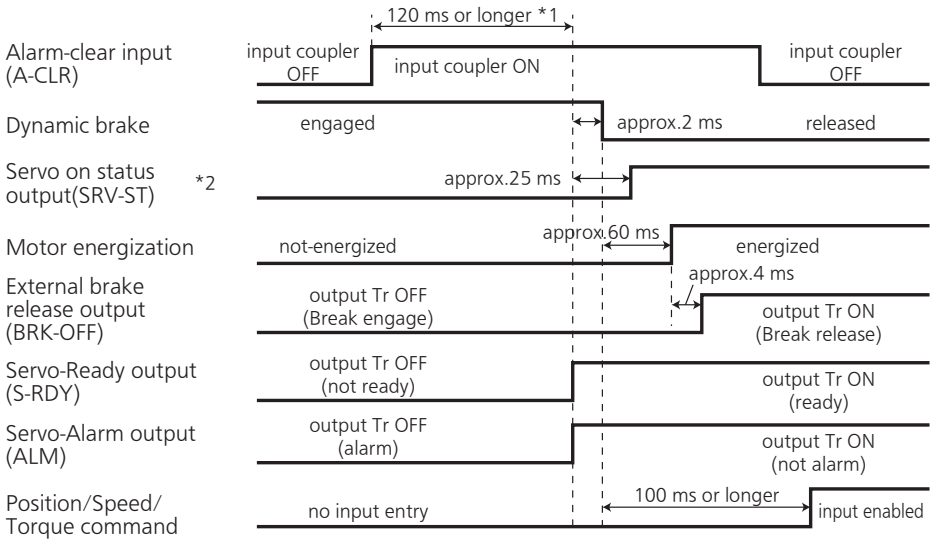

Caution

*1.The alarm clear input recognition time can be changed in Pr5.16 Alarm clear input setup.
*2.Servo ON status output (SRV-ST) is a signal indicating that it has received the Servo-On input; please note that it is not an indication showing command input is possible.

2 Preparation

9. Timing Chart

Servo-Lock

Servo-ON/OFF Action While the Motor Is at Stall (Servo-Lock)

Remarks To turn on/off the servo during normal operation, first stop the motor.

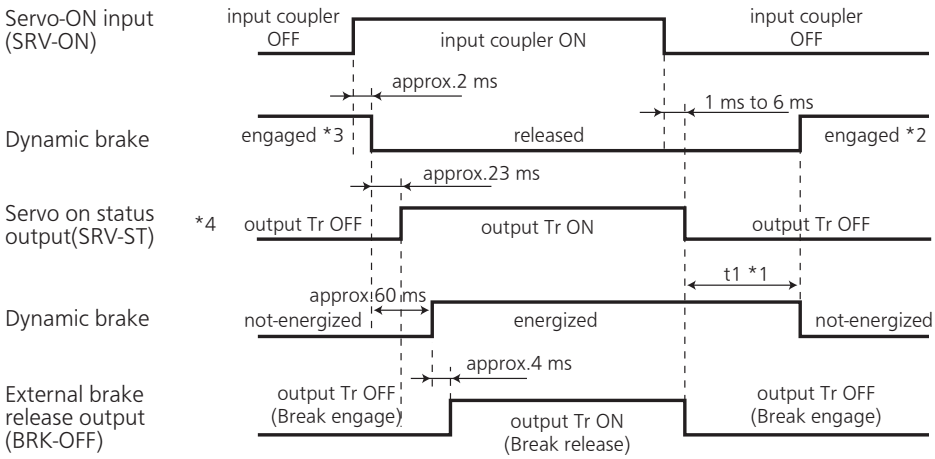

Caution

*1 t1 depends on the setup value of Pr4.37 Setup of mechanical brake action at stalling.
*2 The operation of dynamic brake during servo off depends on the setup value of Pr5.06 Sequence at servo off.
*3.Servo-ON will not be activated until the motor speed falls below approx. 30 r/min.
*4. Servo ON status output (SRV-ST) is a signal indicating that it has received the Servo-On input; please note that it is not an indication showing command input is possible.

Related page
• P.4-47, 4-56 “Details of Parameter”

9. Timing Chart

Servo-ON/OFF

Servo-ON/OFF Action While the Motor Is in Motion

Remarks Timing at emergency stop or trip. Do not repeat this sequence.

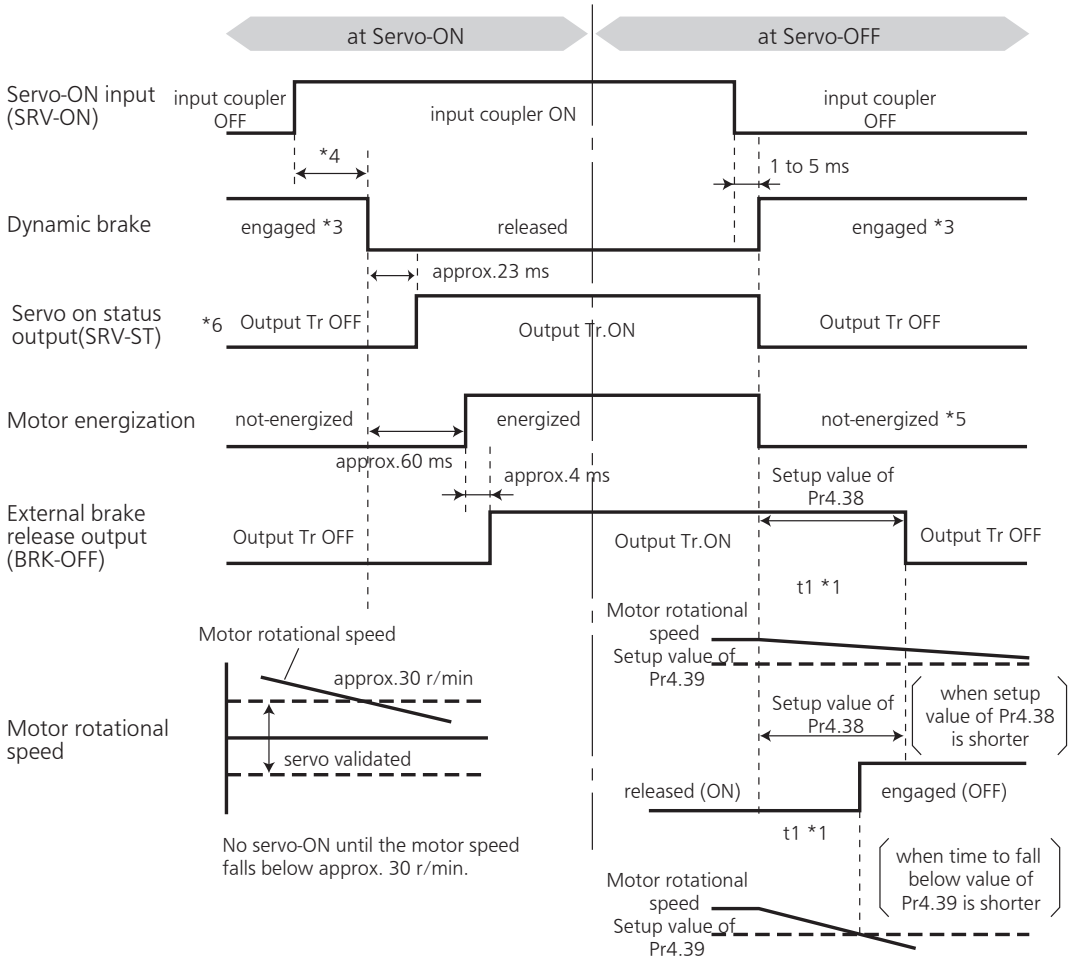

Caution

*1. t1 will be a shorter time of either the setup value of Pr4.38 "Mechanical brake action at running setup" or elapsing time for the motor speed to fall below Pr4.39 "Brake release speed setup" .

*2. Even though the SRV-ON signal is turned on again during the motor deceleration, Servo-ON will not be activated until the motor stops.

*3. For the action of dynamic brake at alarm occurrence, refer to an explanation of Pr5.06, "Sequence at Servo-OFF" as well.

*4. Servo-ON will not be activated until the motor speed falls below approx. 30 r/min.

*5. For the motor energization during deceleration at Servo-OFF depends on the setup value of Pr.5.08, "Sequence at Servo-OFF" .

*6. Servo ON status output (SRV-ST) is a signal indicating that it has received the Servo-On input; please note that it is not an indication showing command input is possible.

Related page • P.2-80 "Dynamic brake"

10. Built-in Holding Brake

Outline

In the applications where the motor drives the vertical axis, this brake would be used to hold and prevent the work (moving load) from falling by gravity while the power to the servo is shut off.

Caution

Use this built-in brake for "Holding" purpose only, that is to hold the stalling status. Never use this for "Brake" purpose to stop the load in motion.

Connecting Example

The following shows the example when the brake is controlled by using the brake release output signal (BRK-OFF) of the driver.

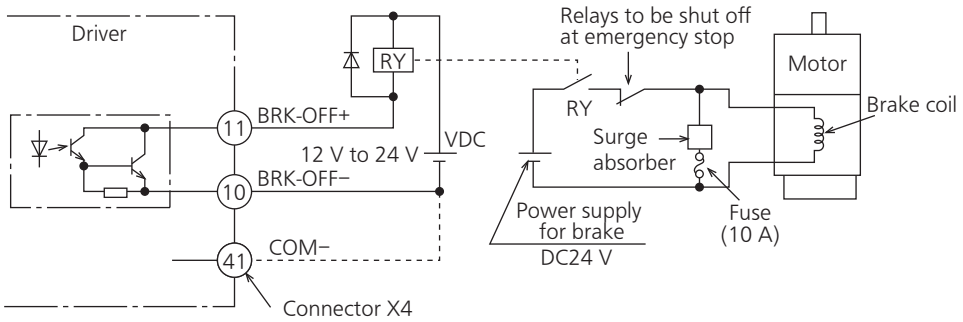

Note

1. The brake coil has no polarity.

Caution

2. Power supply for the brake to be provided by customer. Do not co-use the power supply for the brake and for the control signals (VDC).
3. Install a surge absorber as the above Fig. shows to suppress surge voltage generated by ON/OFF action of the relay (RY). When you use a diode, note that the time from the brake release to brake engagement is slower than that of the case of using a surge absorber.
4. For a surge absorber, refer to P.7-200, "Recommended Components" of Supplement.
5. Recommended components are specified to measure the brake releasing time.
   Reactance of the cable varies depending on the cable length, and it might generate surge voltage.
   Select a surge absorber so that relay coil voltage (max. rating : 30 V, 50 mA) and terminal voltage may not exceed the rating.

Output Timing of BRK-OFF Signal

- For the brake release timing at power-on, or braking timing at Servo-OFF/Servo-Alarm while the motor is in motion, refer to P.2-74, "Timing Chart".
- With the parameter, Pr4.38 (Setup of mechanical brake action while the motor is in motion), you can set up a time between when the motor enters to a free-run from energized status and when BRK-OFF signal turns off (brake will be engaged), when the Servo-OFF or alarm occurs while the motor is in motion.

Note

1. The lining sound of the brake (chattering and etc.) might be generated while running the motor with built-in brake, however this does not affect any functionality.
2. Magnetic flux might be generated through the motor shaft while the brake coil is energized (brake is open). Pay an extra attention when magnetic sensors are used nearby the motor.

10. Built-in Holding Brake

Specifications

Motor series	Motor output	Static friction torque N•m	Rotor inertia x 10^{-4} kg•m^2	Engaging time ms	Releasing time ms	Exciting current DC A (at cool-off)	Releasing voltage	Permissible work (J) per one braking	Permissible total work x 10^3 J	Permissible angular acceleration rad/s^2
MSMF	50 W, 100 W	0.294 or more	0.002	35 or less	20 or less	0.30	DC1 V or more	39.2	4.9	30000
	200 W, 400 W	1.27 or more	0.018	50 or less	15 or less	0.36		137	44.1	
	750 W	2.45 or more	0.075	70 or less	20 or less	0.42		196	147	
	1.0 kW(□80)	3.80 or more						185	80.0	
	1.0 kW(□100), 1.5 kW, 2.0 kW	8.0 or more	0.175	50 or less	15 or less	0.81	DC2 V or more	600	50	10000
	3.0 kW	12.0 or more		80 or less					900	
	4.0 kW	16.2 or more	1.12	110 or less	50 or less	0.90		1470	2160	
	5.0 kW	22.0 or more						1545	2000	
MQMF	100 W	0.39 or more	0.018	15 or less	20 or less	0.30	DC1 V or more	105	44.1	30000
	200 W, 400 W	1.6 or more	0.075	70 or less		0.36		185	80.0	
MDMF	1.0 kW, 1.5 kW, 2.0 kW	13.7 or more	1.12	100 or less	50 or less	0.79	DC2 V or more	1470	2160	10000
	3.0 kW	22.0 or more		110 or less		0.90		1545	2000	
	4.0 kW	25.0 or more	4.7	80 or less	25 or less	1.29		1800	3000	5440
	5.0 kW	44.1 or more	4.1	150 or less	30 or less				3100	5108
	7.5 kW	63.0 or more	3.9	200 or less	80 or less					
	11.0 kW, 15.0 kW	100 or more	7.1	300 or less	140 or less	1.08		2000	4000	
	22.0 kW	200 or more	28		150 or less	1.72		3000		3000
MGMF	850 W, 1.3 kW, 1.8 kW	13.7 or more	1.12	100 or less	50 or less	0.79	DC2 V or more	1470	2160	10000
	2.4 kW	25.0 or more	4.7	80 or less	25 or less	1.29		1800	3000	5440
	2.9 kW									
	4.4 kW	44.1 or more	3.93	150 or less	30 or less				3100	5108
	5.5 kW	63.0 or more	3.9	200 or less	80 or less					
MHMF	50 W, 100 W	0.38 or more	0.002	35 or less	20 or less	0.30	DC1 V or more	39.2	4.9	30000
	200 W, 400 W	1.6 or more	0.018	50 or less		0.36		105	44.1	
	750 W, 1.0 kW(□80)	3.8 or more	0.075	70 or less		0.42		185	80.0	
	1.0 kW(□130), 1.5 kW	13.7 or more	1.12	100 or less	50 or less	0.79	DC2 V or more	1470	2160	10000
	2.0 kW, 3.0 kW, 4.0 kW	25 or more	4.7	80 or less	25 or less	1.29		1800	3000	5440
	5.0 kW	44.1 or more	4.1	150 or less	30 or less				3100	5108
	7.5 kW	63.0 or more	3.9	200 or less	80 or less					

- Excitation voltage is DC24 V ± 10 %(MSMF 50 W to 750W DC24 V ± 1.2).
- Releasing time values represent the ones with DC-cutoff using a varistor.
- Static friction torque, releasing voltage value is kept at ex-factory point.Above values (except static friction torque, releasing voltage) represent typical values.
- Backlash of the built-in holding brake is kept 2° or smaller at ex-factory point.
- Service life of the number of acceleration/deceleration with the above permissible angular acceleration is more than 10 million times. (Life end is defined as when the brake backlash drastically changes.)

11. Dynamic Brake

Outline

This driver (A to G-frame) is equipped with a dynamic brake for emergency stop.
H-frame driver, no built-in dynamic brake.
Pay a special attention to the followings.

Caution

1. Dynamic brake is only for emergency stop.

Do not start/stop the motor by turning on/off the Servo-ON signal (SRV-ON).
Otherwise it may damage the dynamic brake circuit of the driver.

The Motor becomes a dynamo when driven externally and short circuit current occurred while dynamic brake is activated may cause smoking or fire of the motor and driver.

2. Dynamic brake is a short-duration rating, and designed for only emergency stop. Allow approx. 10 minutes pause when the dynamic brake is activated during high-speed running.
(F-frame 200 V, G-frame 200 V, G-frame 400 V) built-in dynamic brake resistor is capable of handling up to 3 continuous halts at the rated revolutions with max. permissible inertia. When overheated under more critical operating conditions, the brake will blow out and should be replaced with a new one.)

- You can activate the dynamic brake in the following cases.
  1) When the main power is turned off
  2) At Servo-OFF
  3) When one of the protective function is activated.
  4) When over-travel inhibit input (NOT, POT) of connector X4 is activated
  In the above cases from 1) to 4), you can select either activation of the dynamic brake or making the motor free-run during deceleration or after the stop, with parameter.
  Note that when the control power is off, for A to F-frame driver, the dynamic brake will be kept actived.Dynamic brake of G,H-frame driver is OFF.
- When the resistance impedance of the built-in dynamic brake of G-frame driver is insufficient, it can be externally mounted.
- Dynamic brake resistor of H-frame driver can be externally mounted.
  The connection method of external dynamic brake resistor is the same as that of G-frame.
- Please use following external dynamic brake resistor.
  (Provided by customer)

Driver		Specification of each resistor		Quantity used
Frame	Voltage	Resistance	Output	
G, H	200 V	1.2 Ω	400 W	3 pcs
G, H	400 V	4.8 Ω	400 W	3 pcs

Related page
- P.3-34 “Inputs and outputs on connector X4”
- P.4-7 to 4-87... “Details of Parameter”
- P.6-5 “Protective Function”

11. Dynamic Brake

Connection Example of External Dynamic Brake Resistor

G-fraame 200 V

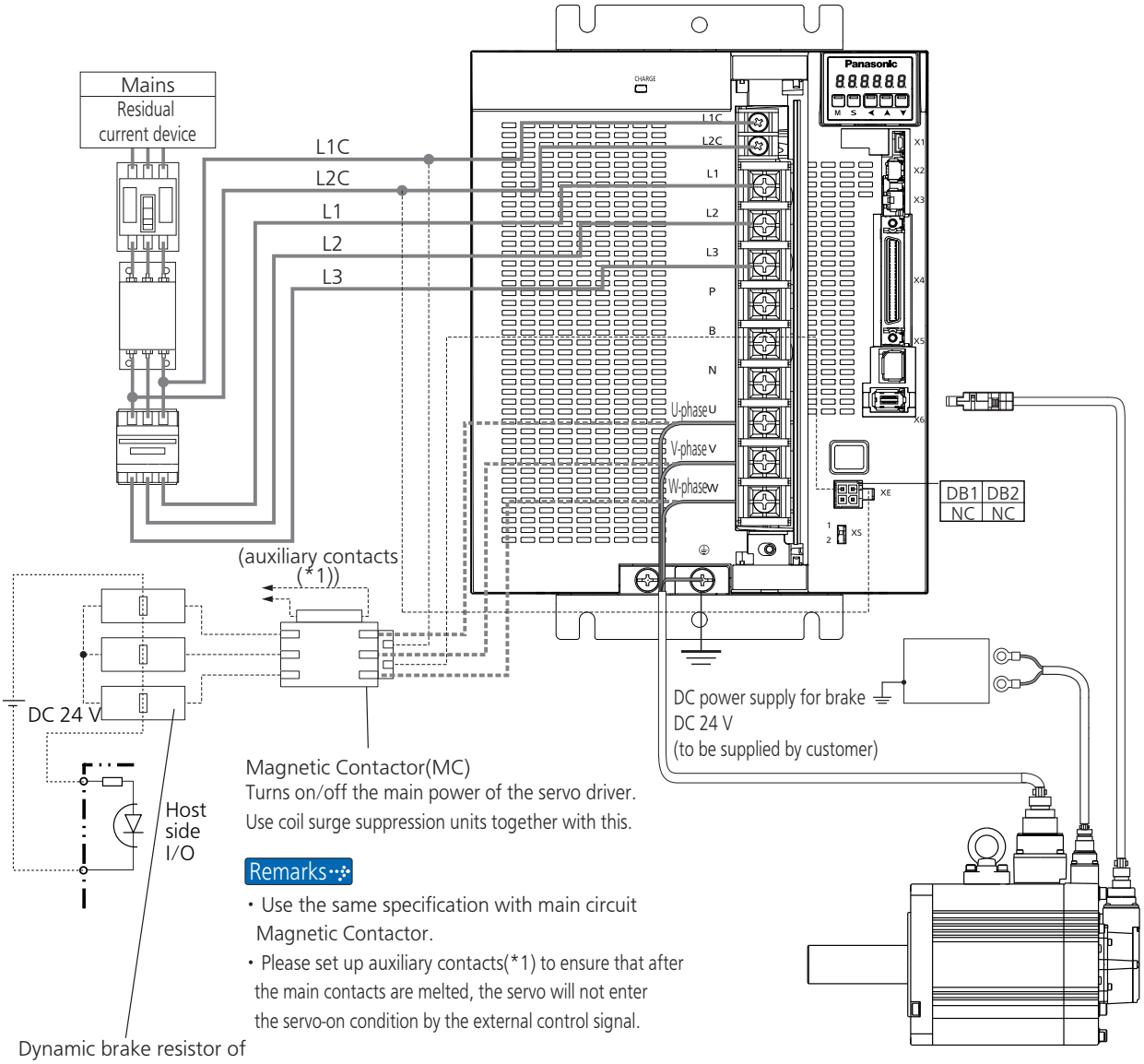

Magnetic Contactor(MC)
Turns on/off the main power of the servo driver.
Use coil surge suppression units together with this.

Remarks

- Use the same specification with main circuit Magnetic Contactor.
- Please set up auxiliary contacts(*1) to ensure that after the main contacts are melted, the servo will not enter the servo-on condition by the external control signal.

Dynamic brake resistor of built-in thermal protector (to be supplied by customer)

Remarks

- Please use 3 dynamic brake resistors of 1.2 Ω 400 W.
- Dynamic brake resistor, etc. should be installed on incombustible materials such as metals.
- Do not use both built-in and external devices.
- Set one for each phase individually.
- After the thermal protector is installed on the dynamic brake resistor, the thermal protector condition can be monitored by the host I/O to ensure that when the thermal protector operates, the servo will not enter the servo-on condition by the external control signal.
- When the host I/O monitor thermal protector is not available, please connect the output of thermal protector to L2C-DB2 to ensure that the dynamic brake does not operate when the thermal protector is operating.
- Please install external dynamic brake resistor with better capacity than built-in dynamic brake resistor.

Terminal DB1,DB2

- When the dynamic brake resistor is mounted externally, set the switch XS to 2.
- Connect external dynamic brake between L1C-DB1 by Magnetic Contactor(for control).

Remarks

- Apply voltage under AC300 V, DC100 V between DB1-DB2.

Terminal N

- Do not connect to anything.

G-fraame 400 V

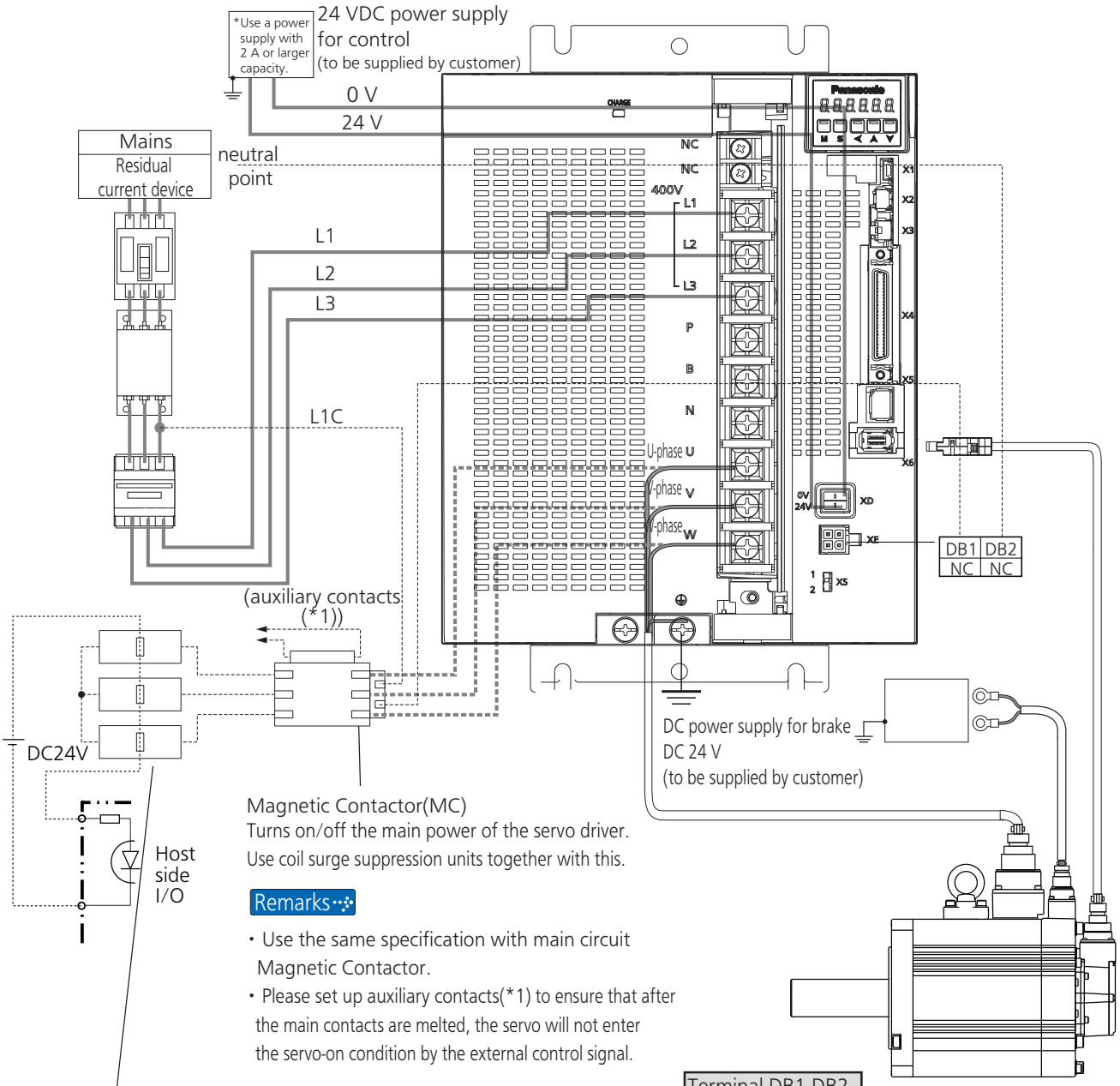

Magnetic Contactor(MC)
Turns on/off the main power of the servo driver.
Use coil surge suppression units together with this.

Remarks

- Use the same specification with main circuit Magnetic Contactor.
- Please set up auxiliary contacts(*1) to ensure that after the main contacts are melted, the servo will not enter the servo-on condition by the external control signal.

Dynamic brake resistor of built-in thermal protector
(to be supplied by customer)

Remarks

- Please use 3 dynamic brake resistors of 4.8 Ω 400 W.
- Dynamic brake resistor, etc. should be installed on incombustible materials such as metals.
- Do not use both built-in and external devices.
- Set one for each phase individually.
- After the thermal protector is installed on the dynamic brake resistor, the thermal protector condition can be monitored by the host I/O to ensure that when the thermal protector operates, the servo will not enter the servo-on condition by the external control signal.
- When the host I/O monitor thermal protector is not available, please connect the output of thermal protector to L2C-DB2 to ensure that the dynamic brake does not operate when the thermal protector is operating.
- Please install external dynamic brake resistor with better capacity than built-in dynamic brake resistor.

Terminal DB1,DB2

- When the dynamic brake resistor is mounted externally, set the switch XS to 2.
- Connect external dynamic brake between L1C-DB1 by Magnetic Contactor(for control).

Remarks

- Apply voltage under AC300 V, DC100 V between DB1-DB2.

Note

- L1C is after the R phase noise filter.
- There is no L1C display on the main unit.

Terminal N

- Do not connect to anything.

11. Dynamic Brake

Condition setting chart

1) Setup of driving condition from deceleration to after stop by main power-off (Pr5.07)

Sequence at main power-off (Pr5.07) Setup value of Pr5.07	Driving condition: During deceleration	Driving condition: After stalling	Contents of deviation counter
0	D B	D B	Clear
1	Free-run	D B	Clear
2	D B	Free-run	Clear
3	Free-run	Free-run	Clear
4	D B	D B	Hold
5	Free-run	D B	Hold
6	D B	Free-run	Hold
7	Free-run	Free-run	Hold
8	Emergency stop	D B	Clear
9	Emergency stop	Free-run	Clear

Torque limit value at emergency stop will be that of Pr5.11 (Setup of torque at emergency stop) when the setup value is 8 or 9.

2) Setup of driving condition from deceleration to after stop by Servo-OFF (Pr5.06)

Sequence at main Servo-OFF (Pr5.06) Setup value of Pr5.06	Driving condition: During deceleration	Driving condition: After stalling	Contents of deviation counter
0	D B	D B	Clear
1	Free-run	D B	Clear
2	D B	Free-run	Clear
3	Free-run	Free-run	Clear
4	D B	D B	Hold
5	Free-run	D B	Hold
6	D B	Free-run	Hold
7	Free-run	Free-run	Hold
8	Emergency stop	D B	Clear
9	Emergency stop	Free-run	Clear

Torque limit value at emergency stop will be that of Pr5.11 (Setup of torque at emergency stop) when the setup value is 8 or 9.

3) Setup of driving condition from deceleration to after stop by activation of protective function (Pr5.10)

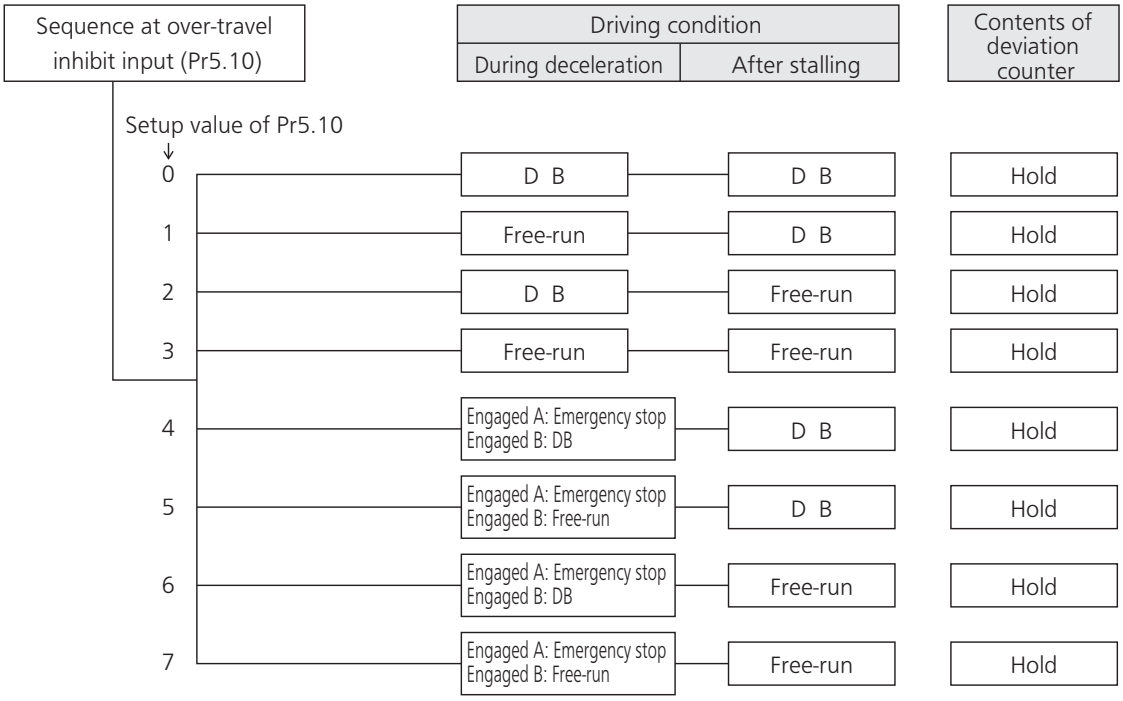

When setup value is within the range 4 and 7, the protection function that supports immediate stop acts according to operation A and the function that does not support acts according to operation B.
During deceleration to stop, the main power supply must be maintained.
When the protection function acts, content of deviation counter is cleared as the alarm is cleared.

4) Setup of driving condition from deceleration to after stop by validation of over-travel inhibit input (Pr5.05)

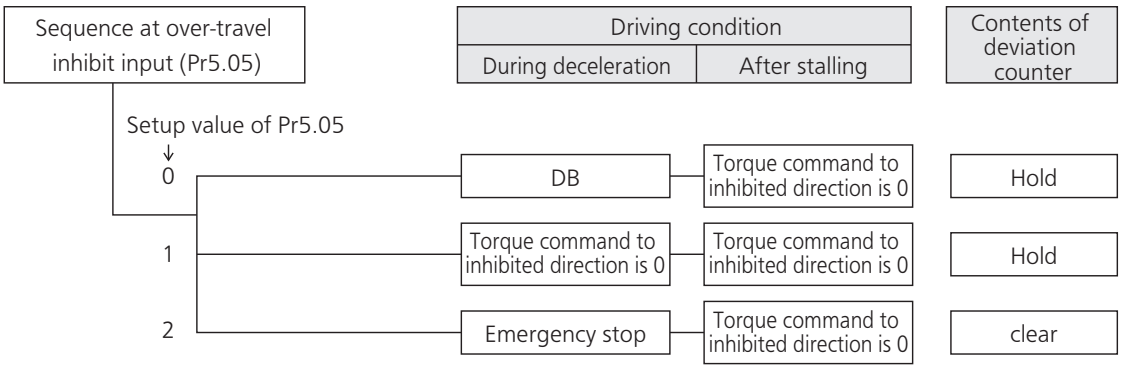

Outline of Parameter

This driver is equipped with various parameters to set up its characteristics and functions. This section describes the function and purpose of each parameter. Read and comprehend very well so that you can adjust this driver in optimum condition for your running requirements.

Setup of Parameter

- You can refer and set up the parameter with either one of the following.
  1) front panel of the driver
  2) combination of the setup support software, "PANATERM" and PC.

Note How to control the front panel, refer to P.2-110.

Setup with the PC

It is possible to connect your personal computer to connector X1 of MINAS A6 using a USB cable for personal computer connection. Downloading the setup support software “PANATERM” from our web site and installing it on your personal computer will allow you to perform the following easily.

- With the PANATERM, you can execute the followings.
  1) Setup and storage of parameters, and writing to the memory (EEPROM).
  2) Monitoring of I/O, pulse input and load factor.
  3) Display of the present alarm and reference of the error history.
  4) Data measurement of the wave-form graphic and bringing of the stored data.
  5) Normal auto-gain tuning
  6) Frequency characteristic measurement of the machine system.

Note Because no production software such as CD-ROM is available, download the setup support software from our web site and install it on your personal computer.

- How to Connect

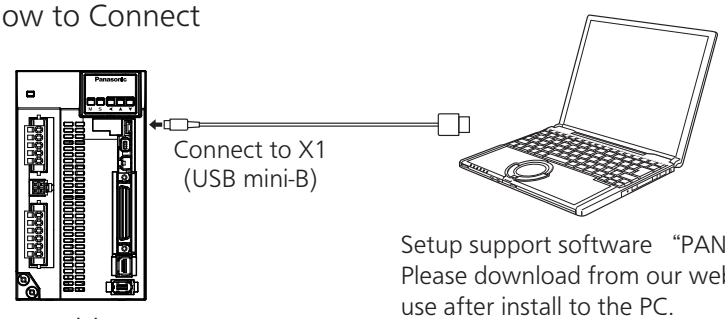

- USB cable
  On the driver, use commercially available USB mini-B connector.
  The connector on the personal computer side should be in accordance with the specifications of the PC.
  When the cable does not have noise filter, attach a signal line noise filter (DV0P1460) to both ends of the cable.

Related page
- P.4-2 “List of Parameters”
- P.7-28 Outline of Setup Support Software, “PANATERM”

12. Setup of Parameter and Mode

Composition and List of Parameters

- The parameter No. is displayed in the form of PrX.YY (X: Classification, YY: No.).
- For the details on the parameters, refer to P.4-7 “Details of parameter” .

Parametr No.		Class name	Group	page
Class	No.*			
0	00 to 18	Basic setting	Parameter for Basic setting	P.4-7
1	00 to 78	Gain adjustment	Parameter for Gain adjustment	P.4-17
2	00 to 37	Damping control	Parameter for Damping control	P.4-24
3	00 to 29	Verocity/ Torque/ Full-closed control	Parameter for Verocity/ Torque/ Full-closed control	P.4-31
4	00 to 57	I/F monitor setting	Parameter for I/F monitor setting	P.4-39
5	00 to 105	Enhancing setting	Parameter for Enhancing setting	P.4-52
6	00 to 98	Special setting	Parameter for Special setting	P.4-69
7	00 to 93	Special setting	Parameter for Special setting	P.4-85
8	00 to 19	For manufactuer's use	Not be used.	P.4-87
9	00 to 50	For manufactuer's use	Not be used.	P.4-87
15	00 to 35	For manufactuer's use	Not be used.	P.4-87

* The Parameter No. consists of 2 digits.

- In this document, following symbols represent each mode.

Symbol	Control mode	Setup value of Pr0.01
P	Position control	0
S	Velocity control	1
T	Torque control	2
F	Full-Closed control	6
P/S	Position (1st)/Velocity (2nd) control	3 *
P/T	Position (1st)/Torque (2nd) control	4 *
S/T	Velocity (1st)/Torque (2nd) control	5 *

* When you select the combination mode of 3, 4 or 5, you can select either 1st or 2nd with control mode switching input (C-MODE).
  When C-MODE is OFF : 1st mode selection
  When C-MODE is ON : 2nd mode selection

  Do not enter the command 10ms before/after the switching.

12. Setup of Parameter and Mode

List of Parameters

[Class 0] Basic setting

Parametr No. Class	Parametr No. No.	Title	Range	Default A,B -frame	Default C -frame	Default D,E,F -frame	Default G,H -frame	Unit	Turning on of power supply	Related Control Mode P	Related Control Mode S	Related Control Mode T	Related Control Mode F	Detail page
0	00	Rotational direction setup	0 to 1	1				–	○	○	○	○	○	4-7
0	01	Control mode setup	0 to 6	0				–	○	○	○	○	○	
0	02	Real-time auto-gain tuning setup	0 to 6	1				–		○	○	○	○	4-8
0	03	Selection of machine stiffness at real-time auto-gain tuning	0 to 31	13		11		–		○	○	○	○	4-9
0	04	Inertia ratio	0 to 10000	250				%		○	○	○	○	4-10
0	05	Selection of command pulse input	0 to 2	0				–	○	○			○	
0	06	Command pulse rotational direction setup	0 to 1	0				–	○	○			○	4-11
0	07	Command pulse input mode setup	0 to 3	1				–	○	○			○	
0	08	Command pulse counts per one motor revolution	0 to 2^{23}	10000				pulse	○	○				4-12
0	09	1st numerator of electronic gear	0 to 2^{30}	0				–		○			○	
0	10	Denominator of electronic gear	0 to 2^{30}	10000				–		○			○	
0	11	Output pulse counts per one motor revolution	1 to 2097152	2500				P/r	○	○	○	○	○	4-13
0	12	Reversal of pulse output logic	0 to 3	0				–	○	○	○	○	○	4-15
0	13	1st torque limit	0 to 500	500*1				%		○	○	○	○	
0	14	Position deviation excess setup	0 to 2^{30}	100000				Command unit		○			○	
0	15	Absolute encoder setup	0 to 4	1				–	○	○	○	○	○	
0	16	External regenerative resistor setup	0 to 3	3	0		3	–	○	○	○	○	○	4-16
0	17	Load factor of external regenerative resistor selection	0 to 4	0				–	○	○	○	○	○	
0	18	For manufactuer's use	–	0				–						

[Class 1] Gain adjustment

Parametr No. Class	Parametr No. No.	Title	Range	Default A,B -frame	Default C -frame	Default D,E,F -frame	Default G,H -frame	Unit	Turning on of power supply	Related Control Mode P	Related Control Mode S	Related Control Mode T	Related Control Mode F	Detail page
1	00	1st gain of position loop	0 to 30000	480		320		0.1 /s*		○			○	4-17
1	01	1st gain of velocity loop	1 to 32767	270		180		0.1 Hz*		○	○	○	○	
1	02	1st time constant of velocity loop integration	1 to 10000	210		310		0.1 ms*		○	○	○	○	
1	03	1st filter of speed detection	0 to 5	0				–		○	○	○	○	
1	04	1st time constant of torque filter	0 to 2500	84		126		0.01 ms		○	○	○	○	

- Partial parameter of position control type and communication type are different from a table in a shipment parameter.
- Definition of symbols under "Power Off/On" - : if a change is made, it will be reflected upon the parameter when the power to the driver is turned off and then on again.
- Definition of symbols under "Related mode" - P: position control, S: velocity control, T: torque control, F: full closed control

*1 Default settings depend on the combination of driver and motor. Refer to P. 2-104 "Setup of Torque Limit" .

Caution The symbol " * " attached to "Unit" . indicates that the digits of setting unit will change if the parameter is set by using the setup support software PANATERM.

Note Parameter describes of this page is P.4-7 to P.4-17.

Parametr No.		Title	Range	Default				Unit	Turning on of power supply	Related Control Mode				Detail page
Class	No.			A,B -frame	C -frame	D,E,F -frame	G,H -frame			P	S	T	F	
1	05	2nd gain of position loop	0 to 30000	480		320		0.1 /s*		○			○	4-18
1	06	2nd gain of velocity loop	1 to 32767	270		180		0.1 Hz*		○	○	○	○	
1	07	2nd time constant of velocity loop integration	1 to 10000	210		310		0.1 ms*		○	○	○	○	
1	08	2nd filter of speed detection	0 to 5	0				–		○	○	○	○	
1	09	2nd time constant of torque filter	0 to 2500	84		126		0.01 ms*		○	○	○	○	
1	10	Velocity feed forward gain	0 to 4000	1000				0.10 %*		○			○	
1	11	Velocity feed forward filter	0 to 6400	0				0.01 ms*		○			○	
1	12	Torque feed forward gain	0 to 2000	1000				0.10%*		○	○		○	4-19
1	13	Torque feed forward filter	0 to 6400	0				0.01 ms*		○	○		○	
1	14	2nd gain setup	0 to 1	1				–		○	○	○	○	
1	15	Mode of position control switching	0 to 10	0				–		○			○	4-20
1	16	Delay time of position control switching	0 to 10000	10				0.1 ms*		○			○	4-21
1	17	Level of position control switching	0 to 20000	0				–		○			○	
1	18	Hysteresis at position control switching	0 to 20000	0				–		○			○	
1	19	Position gain switching time	0 to 10000	10				0.1 ms*		○			○	
1	20	Mode of velocity control switching	0 to 5	0				–			○			4-22
1	21	Delay time of velocity control switching	0 to 10000	0				0.1 ms*			○			
1	22	Level of velocity control switching	0 to 20000	0				–			○			
1	23	Hysteresis at velocity control switching	0 to 20000	0				–			○			4-23
1	24	Mode of torque control switching	0 to 3	0				–				○		
1	25	Delay time of torque control switching	0 to 10000	0				0.1 ms*				○		
1	26	Level of torque control switching	0 to 20000	0				–				○		
1	27	Hysteresis at torque control switching	0 to 20000	0				–				○		
1	28	For manufactuer's use	–	1000				–						
1	29	For manufactuer's use	–	1000				–						
1	30	For manufactuer's use	–	0				–						

- Partial parameter of position control type and communication type are different from a table in a shipment parameter.
- Definition of symbols under "Power Off/On" - : if a change is made, it will be reflected upon the parameter when the power to the driver is turned off and then on again.
- Definition of symbols under "Related mode" - P: position control, S: velocity control, T: torque control, F: full closed control

Caution The symbol " * " attached to "Unit" . indicates that the digits of setting unit will change if the parameter is set by using the setup support software PANATERM.

Note Parameter describes of this page is P.4-18 to P.4-23.

Parametr No.		Title	Range	Default				Unit	Turning on of power supply	Related Control Mode				Detail page
Class	No.			A,B -frame	C -frame	D,E,F -frame	G,H -frame			P	S	T	F	
1	31	For manufactuer's use	–	480		320		–						
1	32	For manufactuer's use	–	270		180		–						
1	33	For manufactuer's use	–	210		310		–						
1	34	For manufactuer's use	–	84		126		–						
1	35	For manufactuer's use	–	250				–						
1	36	For manufactuer's use	–	1000				–						
1	37	For manufactuer's use	–	1000				–						
1	38	For manufactuer's use	–	0				–						
1	39	For manufactuer's use	–	480		320		–						
1	40	For manufactuer's use	–	270		180		–						
1	41	For manufactuer's use	–	210		310		–						
1	42	For manufactuer's use	–	84		126		–						
1	43	For manufactuer's use	–	250				–						
1	44	For manufactuer's use	–	1000				–						
1	45	For manufactuer's use	–	1000				–						4-23
1	46	For manufactuer's use	–	0				–						
1	47	For manufactuer's use	–	480		320		–						
1	48	For manufactuer's use	–	270		180		–						
1	49	For manufactuer's use	–	210		310		–						
1	50	For manufactuer's use	–	84		126		–						
1	51	For manufactuer's use	–	250				–						
1	52	For manufactuer's use	–	1000				–						
1	53	For manufactuer's use	–	1000				–						
1	54	For manufactuer's use	–	0				–						
1	55	For manufactuer's use	–	480		320		–						
1	56	For manufactuer's use	–	270		180		–						
1	57	For manufactuer's use	–	210		310		–						
1	58	For manufactuer's use	–	84		126		–						
1	59	For manufactuer's use	–	250				–						

- Partial parameter of position control type and communication type are different from a table in a shipment parameter.
- Definition of symbols under "Power Off/On" - : if a change is made, it will be reflected upon the parameter when the power to the driver is turned off and then on again.
- Definition of symbols under "Related mode" - P: position control, S: velocity control, T: torque control, F: full closed control

Caution The symbol " * " attached to "Unit" . indicates that the digits of setting unit will change if the parameter is set by using the setup support software PANATERM.

Parametr No.		Title	Range	Default				Unit	Turning on of power supply	Related Control Mode				Detail page
Class	No.			A,B -frame	C -frame	D,E,F -frame	G,H -frame			P	S	T	F	
1	60	For manufactuer's use	–	1000				–						4-23
1	61	For manufactuer's use	–	1000				–						
1	62	For manufactuer's use	–	0				–						
1	63	For manufactuer's use	–	480		320		–						
1	64	For manufactuer's use	–	270		180		–						
1	65	For manufactuer's use	–	210		310		–						
1	66	For manufactuer's use	–	84		126		–						
1	67	For manufactuer's use	–	250				–						
1	68	For manufactuer's use	–	1000				–						
1	69	For manufactuer's use	–	1000				–						
1	70	For manufactuer's use	–	0				–						
1	71	For manufactuer's use	–	480		320		–						
1	72	For manufactuer's use	–	270		180		–						
1	73	For manufactuer's use	–	210		310		–						
1	74	For manufactuer's use	–	84		126		–						
1	75	For manufactuer's use	–	250				–						
1	76	For manufactuer's use	–	1000				–						
1	77	For manufactuer's use	–	1000				–						
1	78	For manufactuer's use	–	0				–						

[Class 2] Damping control

Parametr No.		Title	Range	Default				Unit	Turning on of power supply	Related Control Mode				Detail page
Class	No.			A,B -frame	C -frame	D,E,F -frame	G,H -frame			P	S	T	F	
2	00	Adaptive filter mode setup	0 to 6	0				–		○	○		○	4-24
2	01	1st notch frequency	50 to 5000	5000				Hz		○	○	○	○	
2	02	1st notch width selection	0 to 20	2				–		○	○	○	○	
2	03	1st notch depth selection	0 to 99	0				–		○	○	○	○	
2	04	2nd notch frequency	50 to 5000	5000				Hz		○	○	○	○	
2	05	2nd notch width selection	0 to 20	2				–		○	○	○	○	4-25

- Partial parameter of position control type and communication type are different from a table in a shipment parameter.
- Definition of symbols under "Power Off/On" - : if a change is made, it will be reflected upon the parameter when the power to the driver is turned off and then on again.
- Definition of symbols under "Related mode" - P: position control, S: velocity control, T: torque control, F: full closed control

Caution The symbol " * " attached to "Unit" . indicates that the digits of setting unit will change if the parameter is set by using the setup support software PANATERM.

Note Parameter describes of this page is P.4-23 to P.4-25.

Parametr No. Class	Parametr No. No.	Title	Range	Default A,B -frame	Default C -frame	Default D,E,F -frame	Default G,H -frame	Unit	Turning on of power supply	Related Control Mode P	Related Control Mode S	Related Control Mode T	Related Control Mode F	Detail page
2	06	2nd notch depth selection	0 to 99	0				–		○	○	○	○	4-25
2	07	3rd notch frequency	50 to 5000	5000				Hz		○	○	○	○	
2	08	3rd notch width selection	0 to 20	2				–		○	○	○	○	
2	09	3rd notch depth selection	0 to 99	0				–		○	○	○	○	
2	10	4th notch frequency	50 to 5000	5000				Hz		○	○	○	○	
2	11	4th notch width selection	0 to 20	2				–		○	○	○	○	
2	12	4th notch depth selection	0 to 99	0				–		○	○	○	○	4-26
2	13	Selection of damping filter switching	0 to 6	0				–		○			○	
2	14	1st damping frequency	0 to 3000	0				0.1 Hz*		○			○	4-27
2	15	1st damping filter setup	0 to 1500	0				0.1 Hz*		○			○	
2	16	2nd damping frequency	0 to 3000	0				0.1 Hz*		○			○	
2	17	2nd damping filter setup	0 to 1500	0				0.1 Hz*		○			○	
2	18	3rd damping frequency	0 to 3000	0				0.1 Hz*		○			○	
2	19	3rd damping filter setup	0 to 1500	0				0.1 Hz*		○			○	
2	20	4th damping frequency	0 to 3000	0				0.1 Hz*		○			○	
2	21	4th damping filter setup	0 to 1500	0				0.1 Hz*		○			○	
2	22	Positional command smoothing filter	0 to 10000	92		139		0.1 ms*		○	○		○	4-28
2	23	Positional command FIR filter	0 to 10000	10				0.1 ms*		○			○	4-29
2	24	5th notch frequency	50 to 5000	5000				Hz		○	○	○	○	
2	25	5th notch width selection	0 to 20	2				–		○	○	○	○	
2	26	5th notch depth selection	0 to 99	0				–		○	○	○	○	4-30
2	27	1st damping width setting	0 to 1000	0				–		○			○	
2	28	2nd damping width setting	0 to 1000	0				–		○			○	
2	29	3rd damping width setting	0 to 1000	0				–		○			○	
2	30	4th damping width setting	0 to 1000	0				–		○			○	
2	31	For manufactuer's use	–	0				–						
2	32	For manufactuer's use	–	0				–						
2	33	For manufactuer's use	–	0				–						
2	34	For manufactuer's use	–	0				–						

- Partial parameter of position control type and communication type are different from a table in a shipment parameter.
- Definition of symbols under "Power Off/On" - : if a change is made, it will be reflected upon the parameter when the power to the driver is turned off and then on again.
- Definition of symbols under "Related mode" - P: position control, S: velocity control, T: torque control, F: full closed control

Caution The symbol " * " attached to "Unit" . indicates that the digits of setting unit will change if the parameter is set by using the setup support software PANATERM.

Note Parameter describes of this page is P.4-25 to P.4-30.

Parametr No.		Title	Range	Default				Unit	Turning on of power supply	Related Control Mode				Detail page
Class	No.			A,B -frame	C -frame	D,E,F -frame	G,H -frame			P	S	T	F	
2	35	For manufactuer's use	–	0				–						4-30
2	36	For manufactuer's use	–	0				–						
2	37	For manufactuer's use	–	0				–						

[Class 3] Verocity/ Torque/ Full-closed control

Parametr No.		Title	Range	Default				Unit	Turning on of power supply	Related Control Mode				Detail page
Class	No.			A,B -frame	C -frame	D,E,F -frame	G,H -frame			P	S	T	F	
3	00	Speed setup, Internal/External switching	0 to 3	0				–			○			4-31
3	01	Speed command rotational direction selection	0 to 1	0				–			○			
3	02	Input gain of speed command	10 to 2000	500				(r/min)/ V			○	○		4-32
3	03	Reversal of speed command input	0 to 1	1				–			○			
3	04	1st speed of speed setup	−20000 to 20000	0				r/min			○			4-33
3	05	2nd speed of speed setup	−20000 to 20000	0				r/min			○			
3	06	3rd speed of speed setup	−20000 to 20000	0				r/min			○			
3	07	4th speed of speed setup	−20000 to 20000	0				r/min			○			
3	08	5th speed of speed setup	−20000 to 20000	0				r/min			○			
3	09	6th speed of speed setup	−20000 to 20000	0				r/min			○			
3	10	7th speed of speed setup	−20000 to 20000	0				r/min			○			
3	11	8th speed of speed setup	−20000 to 20000	0				r/min			○			
3	12	Acceleration time setup	0 to 10000	0				ms/ (1000 r/ min)			○			
3	13	Deceleration time setup	0 to 10000	0				ms/ (1000 r/ min)			○			
3	14	Sigmoid acceleration/ deceleration time setup	0 to 1000	0				ms			○			4-34
3	15	Speed zero-clamp function selection	0 to 3	0				–			○	○		
3	16	Speed zero clamp level	10 to 20000	30				r/min			○	○		
3	17	Selection of torque command	0 to 2	0				–				○		4-35
3	18	Torque command direction selection	0 to 1	0				–				○		
3	19	Input gain of torque command	10 to 100	30				0.1 V/ 100 %*				○		
3	20	Input reversal of torque command	0 to 1	0				–				○		

- Partial parameter of position control type and communication type are different from a table in a shipment parameter.
- Definition of symbols under "Power Off/On" - : if a change is made, it will be reflected upon the parameter when the power to the driver is turned off and then on again.
- Definition of symbols under "Related mode" - P: position control, S: velocity control, T: torque control, F: full closed control

Caution The symbol " * " attached to "Unit" . indicates that the digits of setting unit will change if the parameter is set by using the setup support software PANATERM.

Note Parameter describes of this page is P.4-30 to P.4-35.

Parametr No. Class	Parametr No. No.	Title	Range	Default A,B -frame	Default C -frame	Default D,E,F -frame	Default G,H -frame	Unit	Turning on of power supply	Related Control Mode P	Related Control Mode S	Related Control Mode T	Related Control Mode F	Detail page
3	21	Speed limit value 1	0 to 20000	0				r/min				○		4-36
3	22	Speed limit value 2	0 to 20000	0				r/min				○		
3	23	External scale selection	0 to 6	0				–	○				○	
3	24	Numerator of external scale division	0 to 2^{23}	0				–	○				○	4-37
3	25	Denominator of external scale division	1 to 2^{23}	10000				–	○				○	
3	26	Reversal of direction of external scale	0 to 3	0				–	○				○	
3	27	External scale Z phase disconnection detection disable	0 to 1	0				–	○				○	
3	28	Hybrid deviation excess setup	1 to 2^{27}	16000				Command unit	○				○	
3	29	Hybrid deviation clear setup	0 to 100	0				Revolution	○				○	4-38

[Class 4] I/F monitor setting

Parametr No. Class	Parametr No. No.	Title	Range	Default A,B -frame	Default C -frame	Default D,E,F -frame	Default G,H -frame	Unit	Turning on of power supply	Related Control Mode P	Related Control Mode S	Related Control Mode T	Related Control Mode F	Detail page
4	00	SI1 input selection (Pin No.8)	0 to 00FFFFFFh	8553090				–	○	○	○	○	○	4-39
4	01	SI2 input selection (Pin No.9)	0 to 00FFFFFFh	8487297				–	○	○	○	○	○	4-40
4	02	SI3 input selection (Pin No.26)	0 to 00FFFFFFh	9539850				–	○	○	○	○	○	
4	03	SI4 input selection (Pin No.27)	0 to 00FFFFFFh	394758				–	○	○	○	○	○	
4	04	SI5 input selection (Pin No.28)	0 to 00FFFFFFh	4108				–	○	○	○	○	○	
4	05	SI6 input selection (Pin No.29)	0 to 00FFFFFFh	197379				–	○	○	○	○	○	
4	06	SI7 input selection (Pin No.30)	0 to 00FFFFFFh	3847				–	○	○	○	○	○	
4	07	SI8 input selection (Pin No.31)	0 to 00FFFFFFh	263172				–	○	○	○	○	○	
4	08	SI9 input selection (Pin No.32)	0 to 00FFFFFFh	328965				–	○	○	○	○	○	
4	09	SI10 input selection (Pin No.33)	0 to 00FFFFFFh	3720				–	○	○	○	○	○	
4	10	SO1 output selection (Pin No.10, 11)	0 to 00FFFFFFh	197379				–	○	○	○	○	○	4-41
4	11	SO2 output selection (Pin No.34, 35)	0 to 00FFFFFFh	131586				–	○	○	○	○	○	
4	12	SO3 output selection (Pin No.36, 37)	0 to 00FFFFFFh	65793				–	○	○	○	○	○	
4	13	SO4 output selection (Pin No.38, 39)	0 to 00FFFFFFh	328964				–	○	○	○	○	○	
4	14	SO5 output selection (Pin No.12)	0 to 00FFFFFFh	460551				–	○	○	○	○	○	
4	15	SO6 output selection (Pin No.40)	0 to 00FFFFFFh	394758				–	○	○	○	○	○	

- Partial parameter of position control type and communication type are different from a table in a shipment parameter.
- Definition of symbols under "Power Off/On" - : if a change is made, it will be reflected upon the parameter when the power to the driver is turned off and then on again.
- Definition of symbols under "Related mode" - P: position control, S: velocity control, T: torque control, F: full closed control

Note Parameter describes of this page is P.4-36 to P.4-41.

Parametr No.		Title	Range	Default				Unit	Turning on of power supply	Related Control Mode				Detail page
Class	No.			A,B -frame	C -frame	D,E,F -frame	G,H -frame			P	S	T	F	
4	16	Type of analog monitor 1	0 to 28	0				–		○	○	○	○	4-42
4	17	Analog monitor 1 output gain	0 to 214748364	0				–		○	○	○	○	
4	18	Type of analog monitor 2	0 to 28	4				–		○	○	○	○	
4	19	Analog monitor 2 output gain	0 to 214748364	0				–		○	○	○	○	
4	20	For manufactuer's use	–	0				–						
4	21	Analog monitor output setup	0 to 2	0				–		○	○	○	○	4-44
4	22	Analog input 1 (AI1) offset setup	−27888 to 27888	0				0.366 mV		○	○	○	○	
4	23	Analog input 1 (AI1) filter	0 to 6400	0				0.01 ms*		○	○	○	○	
4	24	Analog input 1 (AI1) overvoltage setup	0 to 100	0				0.1 V*		○	○	○	○	
4	25	Analog input 2 (AI2) offset setup	−1707 to 1707	0				5.86 mV		○	○	○	○	
4	26	Analog input 2 (AI2) filter	0 to 6400	0				0.01 ms*		○	○	○	○	
4	27	Analog input 2 (AI2) overvoltage setup	0 to 100	0				0.1 V*		○	○	○	○	
4	28	Analog input 3 (AI3) offset setup	−1707 to 1707	0				5.86 mV		○	○	○	○	
4	29	Analog input 3 (AI3) filter	0 to 6400	0				0.01 ms*		○	○	○	○	4-45
4	30	Analog input 3 (AI3) overvoltage setup	0 to 100	0				0.1 V*		○	○	○	○	
4	31	Positioning complete (In-position) range	0 to 2097152	10				Command unit		○			○	
4	32	Positioning complete (In-position) output setup	0 to 10	0				–		○			○	
4	33	INP hold time	0 to 30000	0				1 ms		○			○	4-46
4	34	Zero-speed	10 to 20000	50				r/min		○	○	○	○	
4	35	Speed coincidence range	10 to 20000	50				r/min			○	○		
4	36	At-speed (Speed arrival)	10 to 20000	1000				r/min			○	○		4-47
4	37	Mechanical brake action at stalling setup	0 to 10000	0				1 ms		○	○	○	○	
4	38	Mechanical brake action at running setup	0 to 10000	0				1 ms		○	○	○	○	
4	39	Brake release speed setup	30 to 3000	30				r/min	○	○	○	○	○	4-48
4	40	Selection of alarm output 1	0 to 40	0				–		○	○	○	○	
4	41	Selection of alarm output 2	0 to 40	0				–		○	○	○	○	
4	42	2nd Positioning complete (In-position) range	0 to 2097152	10				Command unit		○			○	
4	44	Position compare output pulse width setting	0 to 32767	0				0.1ms	○	○			○	4-49

- Partial parameter of position control type and communication type are different from a table in a shipment parameter..
- Definition of symbols under "Power Off/On" - : if a change is made, it will be reflected upon the parameter when the power to the driver is turned off and then on again.
- Definition of symbols under "Related mode" - P: position control, S: velocity control, T: torque control, F: full closed control

*1 Default settings depend on the combination of driver and motor. Refer to P. 2-103 "Setup of Torque Limit" .

Caution The symbol " * " attached to "Unit" . indicates that the digits of setting unit will change if the parameter is set by using the setup support software PANATERM.

Note Parameter describes of this page is P.4-42 to P.4-49.

Parametr No.		Title	Range	Default				Unit	Turning on of power supply	Related Control Mode				Detail page
Class	No.			A,B -frame	C -frame	D,E,F -frame	G,H -frame			P	S	T	F	
4	45	Position compare output polarity select	0 to 63	0				–	○	○			○	4-49
4	47	Pulse output select	0 to 7	0				–	○	○	○	○	○	
4	48	Position compare value 1	-2147483648 to 2147483647	0				Command unit		○			○	
4	49	Position compare value 2	-2147483648 to 2147483647	0				Command unit		○			○	4-50
4	50	Position compare value 3	-2147483648 to 2147483647	0				Command unit		○			○	
4	51	Position compare value 4	-2147483648 to 2147483647	0				Command unit		○			○	
4	52	Position compare value 5	-2147483648 to 2147483647	0				Command unit		○			○	
4	53	Position compare value 6	-2147483648 to 2147483647	0				Command unit		○			○	
4	54	Position compare value 7	-2147483648 to 2147483647	0				Command unit		○			○	
4	55	Position compare value 8	-2147483648 to 2147483647	0				Command unit		○			○	
4	56	Position compare output delay compensation amount	-32768 to 32767	0				0.1μs	○	○			○	
4	57	Position compare output assignment setting	-2147483648 to 2147483647	0				–	○	○			○	4-51

[Class 5] Enhancing setting

Parametr No.		Title	Range	Default				Unit	Turning on of power supply	Related Control Mode				Detail page
Class	No.			A,B -frame	C -frame	D,E,F -frame	G,H -frame			P	S	T	F	
5	00	2nd numerator of electronic gear	0 to 2^{30}	0				–		○			○	4-52
5	01	3rd numerator of electronic gear	0 to 2^{30}	0				–		○			○	
5	02	4th numerator of electronic gear	0 to 2^{30}	0				–		○			○	
5	03	Denominator of pulse output division	0 to 8388608	0				–	○	○	○	○	○	
5	04	Over-travel inhibit input setup	0 to 2	1				–	○	○	○	○	○	
5	05	Sequence at over-travel inhibit	0 to 2	0				–	○	○	○	○	○	4-53
5	06	Sequence at Servo-Off	0 to 9	0				–		○	○	○	○	4-54
5	07	Sequence at main power OFF	0 to 9	0				–		○	○	○	○	
5	08	LV trip selection at main power OFF	0 to 3	1				–		○	○	○	○	4-55
5	09	Detection time of main power off	20 to 2000	70				1 ms	○	○	○	○	○	
5	10	Sequence at alarm	0 to 7	0				–		○	○	○	○	
5	11	Torque setup for emergency stop	0 to 500	0				%		○	○	○	○	4-56

- Partial parameter of position control type and communication type are different from a table in a shipment parameter.
- Definition of symbols under "Power Off/On" - : if a change is made, it will be reflected upon the parameter when the power to the driver is turned off and then on again.
- Definition of symbols under "Related mode" - P: position control, S: velocity control, T: torque control, F: full closed control

Caution The symbol " * " attached to "Unit" . indicates that the digits of setting unit will change if the parameter is set by using the setup support software PANATERM.

Note Parameter describes of this page is P.4-49 to P.4-56.

Parametr No.		Title	Range	Default				Unit	Turning on of power supply	Related Control Mode				Detail page
Class	No.			A,B -frame	C -frame	D,E,F -frame	G,H -frame			P	S	T	F	
5	12	Over-load level setup	0 to 500	0				%		○	○	○	○	4-56
5	13	Over-speed level setup	0 to 20000	0				r/min		○	○	○	○	
5	14	Motor working range setup	0 to 1000	10				0.1 revolution*		○			○	
5	15	I/F reading filter	0 to 3	0				—	○	○	○	○	○	
5	16	Alarm clear input setup	0 to 1	0				—	○	○	○	○	○	
5	17	Counter clear input mode	0 to 4	3				—		○			○	4-57
5	18	Invalidation of command pulse inhibit input	0 to 2	1				—		○			○	
5	19	Command pulse inhibit input reading setup	0 to 5	0				—	○	○			○	
5	20	Position setup unit select	0 to 1	0				—	○	○			○	4-58
5	21	Selection of torque limit	0 to 6	1				—		○	○		○	
5	22	2nd torque limit	0 to 500	500*1				%		○	○		○	
5	23	Torque limit switching setup 1	0 to 4000	0				ms/100 %		○	○		○	
5	24	Torque limit switching setup 2	0 to 4000	0				ms/100 %		○	○		○	4-59
5	25	External input positive direction torque limit	0 to 500	500*1				%		○	○		○	
5	26	External input negative direction torque limit	0 to 500	500*1				%		○	○		○	
5	27	Input gain of analog torque limit	10 to 100	30				0.1 V/100 %*		○	○		○	
5	28	LED initial status	0 to 42	1				—	○	○	○	○	○	4-60
5	29	RS232 baud rate setup	0 to 7	2				—	○	○	○	○	○	
5	30	RS485 baud rate setup	0 to 7	2				—	○	○	○	○	○	4-61
5	31	Axis address	0 to 127	1				—	○	○	○	○	○	
5	32	Command pulse input maximum setup	250 to 8000	4000				kpulse/s	○	○			○	
5	33	Pulse regenerative output limit setup	0 to 1	0				—	○	○	○	○	○	
5	34	For manufactuer's use	—	4				—						4-62
5	35	Front panel lock setup	0 to 1	0				—	○	○	○	○	○	
5	36	For manufactuer's use	—	0				—						
5	37	Modbus connection setting	0 to 2	0				—	○	○	○	○	○	
5	38	Modbus communication setting	0 to 5	0				—	○	○	○	○	○	
5	39	Modbus response waiting time	0 to 10000	0				ms		○	○	○	○	
5	40	Modbus communication timeout time	0 to 10000	0				ms		○	○	○	○	4-63

- Partial parameter of position control type and communication type are different from a table in a shipment parameter.
- Definition of symbols under "Power Off/On" - : if a change is made, it will be reflected upon the parameter when the power to the driver is turned off and then on again.
- Definition of symbols under "Related mode" - P: position control, S: velocity control, T: torque control, F: full closed control

Caution The symbol " * " attached to "Unit" . indicates that the digits of setting unit will change if the parameter is set by using the setup support software PANATERM.

Note Parameter describes of this page is P.4-56 to P.4-63.

Parametr No. Class	Parametr No. No.	Title	Range	Default A,B -frame	Default C -frame	Default D,E,F -frame	Default G,H -frame	Unit	Turning on of power supply	Related Control Mode P	Related Control Mode S	Related Control Mode T	Related Control Mode F	Detail page
5	41	For manufactuer's use	–	0				–						4-63
5	42	Modbus broadcast setting	-32768 to 32767	0				–		○	○	○	○	
5	45	Quadrant projection positive direction compensation value	-1000 to 1000	0				0.1%		○			○	
5	46	Quadrant projection negative direction compensation value	-1000 to 1000	0				0.1%		○			○	
5	47	Quadrant projection compensation delay time	0 to 1000	0				ms		○			○	
5	48	Quadrant projection compensation filter setting L	0 to 6400	0				0.01 ms		○			○	4-64
5	49	Quadrant projection compensation filter setting H	0 to 10000	0				0.1 ms		○			○	
5	50	For manufactuer's use	–	0				–						
5	51	For manufactuer's use	–	0				–						
5	52	For manufactuer's use	–	0				–						
5	53	For manufactuer's use	–	0				–						
5	54	For manufactuer's use	–	0				–						
5	55	For manufactuer's use	–	0				–						
5	56	Slow stop deceleration time setting	0 to 10000	0				ms/ (1000 r/min)		○				
5	57	Slow stop S-shape acceleration and deceleration setting	0 to 1000	0				ms		○				
5	58	Modbus mirror register setting 1*1	-32768 to 32767	24591				–	○	○	○	○	○	
5	59	Modbus mirror register setting 2*1	-32768 to 32767	24592				–	○	○	○	○	○	
5	60	Modbus mirror register setting 3*1	-32768 to 32767	16421				–	○	○	○	○	○	4-65
5	61	Modbus mirror register setting 4*1	-32768 to 32767	24613				–	○	○	○	○	○	
5	62	Modbus mirror register setting 5*1	-32768 to 32767	17429				–	○	○	○	○	○	
5	63	Modbus mirror register setting 6*1	-32768 to 32767	17418				–	○	○	○	○	○	
5	64	Modbus mirror register setting 7*1	-32768 to 32767	17427				–	○	○	○	○	○	
5	65	Modbus mirror register setting 8*1	-32768 to 32767	17419				–	○	○	○	○	○	
5	66	Deterioration diagnosis convergence judgment time	0 to 10000	0				0.1s	○	○	○	○	○	
5	67	Deterioration diagnosis inertia ratio upper limit	0 to 10000	0				%	○	○	○	○	○	
5	68	Deterioration diagnosis inertia ratio lower limit	0 to 10000	0				%	○	○	○	○	○	

- Partial parameter of position control type and communication type are different from a table in a shipment parameter.
- Definition of symbols under "Power Off/On" - : if a change is made, it will be reflected upon the parameter when the power to the driver is turned off and then on again.
- Definition of symbols under "Related mode" - P: position control, S: velocity control, T: torque control, F: full closed control

Caution The symbol " * " attached to "Unit" . indicates that the digits of setting unit will change if the parameter is set by using the setup support software PANATERM.

Note Parameter describes of this page is P.4-63 to P.4-65.

Parametr No.		Title	Range	Default				Unit	Turning on of power supply	Related Control Mode				Detail page
Class	No.			A,B -frame	C -frame	D,E,F -frame	G,H -frame			P	S	T	F	
5	69	Deterioration diagnosis unbalanced load upper limit	-1000 to 1000	0				0.1%	○	○	○	○	○	4-66
5	70	Deterioration diagnosis unbalanced load lower limit	-1000 to 1000	0				0.1%	○	○	○	○	○	
5	71	Deterioration diagnosis dynamic friction upper limit	-1000 to 1000	0				0.1%	○	○	○	○	○	
5	72	Deterioration diagnosis dynamic friction lower limit	-1000 to 1000	0				0.1%	○	○	○	○	○	
5	73	Deterioration diagnosis viscous friction upper limit	0 to 10000	0				0.1%/ (10000r/min)	○	○	○	○	○	
5	74	Deterioration diagnosis viscous friction lower limit	0 to 10000	0				0.1%/ (10000r/min)	○	○	○	○	○	
5	75	Deterioration diagnosis velocity setting	-20000 to 20000	0				r/min	○	○	○	○	○	
5	76	Deterioration diagnosis torque average time	0 to 10000	0				ms	○	○	○	○	○	
5	77	Deterioration diagnosis torque upper limit	-1000 to 1000	0				0.1%	○	○	○	○	○	4-67
5	78	Deterioration diagnosis torque lower limit	-1000 to 1000	0				0.1%	○	○	○	○	○	
5	79	Modbus mirror register setting 9 *1	-32768 to 32767	17410				–	○	○	○	○	○	
5	80	Modbus mirror register setting 10 *1	-32768 to 32767	17411				–	○	○	○	○	○	
5	81	Modbus mirror register setting 11 *1	-32768 to 32767	16398				–	○	○	○	○	○	
5	82	Modbus mirror register setting 12 *1	-32768 to 32767	16402				–	○	○	○	○	○	
5	83	Modbus mirror register setting 13 *1	-32768 to 32767	16411				–	○	○	○	○	○	
5	84	Modbus mirror register setting 14 *1	-32768 to 32767	16405				–	○	○	○	○	○	
5	85	Modbus mirror register setting 15 *1	-32768 to 32767	16406				–	○	○	○	○	○	
5	86	Modbus mirror register setting 16 *1	-32768 to 32767	0				–	○	○	○	○	○	4-68
5	94	Position compare output condition setting	0~2	0				–	○	○			○	
5	96	For manufacturer's use	–	0				–						
5	97	For manufacturer's use	–	0				–						
5	102	For manufacturer's use	–	0				–						
5	103	For manufacturer's use	–	0				–						
5	105	For manufacturer's use	–	0				–						

- Partial parameter of position control type and communication type are different from a table in a shipment parameter.
- Definition of symbols under "Power Off/On" - : if a change is made, it will be reflected upon the parameter when the power to the driver is turned off and then on again.
- Definition of symbols under "Related mode" - P: position control, S: velocity control, T: torque control, F: full closed control

Caution The symbol " * " attached to "Unit" . indicates that the digits of setting unit will change if the parameter is set by using the setup support software PANATERM.

Note Parameter describes of this page is P.4-66 to P.4-68.

[Class 6] Special setting

Parametr No.		Title	Range	Default				Unit	Turning on of power supply	Related Control Mode				Detail page
Class	No.			A,B -frame	C -frame	D,E,F -frame	G,H -frame			P	S	T	F	
6	00	Analog torque feed forward conversion gain	0 to 100	0				0.1 V/100 %*		○	○		○	4-69
6	02	Speed deviation excess setup	0 to 20000	0				r/min		○				
6	04	JOG trial run command speed	0 to 500	300				r/min		○	○	○	○	
6	05	Position control 3rd gain effective time	0 to 10000	0				0.1 ms*		○			○	
6	06	Position control 3rd gain scale factor	50 to 1000	100				%		○			○	
6	07	Additional value to torque command	−100 to 100	0				%		○	○		○	
6	08	Torque compensation value in positive direction	−100 to 100	0				%		○			○	4-70
6	09	Torque compensation value in negative direction	−100 to 100	0				%		○			○	
6	10	Function expansion setup	-32768 to 32767	16				–		○	○	○	○	
6	11	Current response setup	10 to 300	100				%						
6	13	Second inertia ratio	0 to 10000	250				%		○	○	○	○	4-71
6	14	Immediate stop time at the time of alarming	0 to 1000	200				1 ms		○	○	○	○	
6	15	2nd over-speed level setup	0 to 20000	0				r/min		○	○	○	○	
6	16	For manufacturer's use	–	0				–		○	○	○	○	
6	17	Front panel parameter writing selection	0 to 1	0				–	○	○	○	○	○	
6	18	Power turn-on wait time	0 to 100	0				0.1 s*	○	○	○	○	○	
6	19	Encoder Z phase setup	0 to 32767	0				pulse	○	○	○	○	○	
6	20	Z-phase setup of external scale	0 to 400	0				μs	○				○	4-72
6	21	Serial absolute external scale Z phase setup	0 to 2^{28}	0				pulse	○				○	
6	22	A, B phase external scale pulse output method selection	0 to 1	0				–	○				○	4-73
6	23	Load fluctuation correction gain	−100 to 100	0				%		○	○			
6	24	Load fluctuation correction filter	10 to 2500	53				0.01 ms*		○	○			
6	25	For manufacturer's use	–	0				–						
6	26	For manufacturer's use	–	2				–						
6	27	Alarm latch time selection	0 to 10	5				s	○	○	○	○	○	
6	28	Special function selection	0 to 4	0				–	○	○				4-74

- Partial parameter of position control type and communication type are different from a table in a shipment parameter.
- Definition of symbols under "Power Off/On" - : if a change is made, it will be reflected upon the parameter when the power to the driver is turned off and then on again.
- Definition of symbols under "Related mode" - P: position control, S: velocity control, T: torque control, F: full closed control

Caution The symbol " * " attached to "Unit" . indicates that the digits of setting unit will change if the parameter is set by using the setup support software PANATERM.

Note Parameter describes of this page is P.4-69 to P.4-74.

Parametr No.		Title	Range	Default				Unit	Turning on of power supply	Related Control Mode				Detail page
Class	No.			A,B -frame	C -frame	D,E,F -frame	G,H -frame			P	S	T	F	
6	30	For manufacturer's use	–	0				–						4-74
6	31	Real time auto tuning estimation speed	0 to 3	1				–		○	○	○	○	
6	32	Real time auto tuning custom setup	−32768 to 32767	0				–		○	○	○	○	4-75
6	33	For manufacturer's use	–	1000				–						4-77
6	34	Hybrid vibration suppression gain	0 to 30000	0				0.1 /s*					○	
6	35	Hybrid vibration suppression filter	0 to 32000	10				0.01 ms*					○	
6	36	Dynamic brake operation input	0 to 1	0				–	○	○	○	○	○	
6	37	Oscillation detecting level	0 to 1000	0				0.1 %*		○	○	○	○	
6	38	Alarm mask setup	−32768 to 32767	4				–	○	○	○	○	○	
6	39	Alarm mask setup2	−32768 to 32767	0				–	○	○	○	○	○	4-78
6	41	1st damping depth	0 to 1000	0				–		○			○	
6	42	Two-stage torque filter time constant	0 to 2500	0				0.01 ms		○	○	○	○	
6	43	Two-stage torque filter damping term	0 to 1000	0				–		○	○	○	○	
6	47	Function expansion settings 2	−32768 to 32767	1				–	○	○	○	○	○	4-79
6	48	Adjustment filter	0 to 2000	A:11 B,C:12		17		0.1 ms		○	○		○	
6	49	Command response filter/ adjustment filter damping term setting	0 to 99	15				–		○			○	
6	50	Viscous friction compensation gain	0 to 10000	0				0.1 %/ (10000 r/min)		○	○		○	4-80
6	51	Immediate stop completion wait time	0 to 10000	0				ms		○	○	○	○	
6	52	For manufacturer's use	–	0				–						
6	53	For manufacturer's use	–	0				–						
6	54	For manufacturer's use	–	0				–						
6	57	Torque saturation error protection detection time	0 to 5000	0				ms		○	○		○	4-81
6	58	Serial absolute external scale Z phase shift amount *1	-2147483648 to 2147483647	0				pulse	○	○	○	○	○	
6	59	For manufacturer's use	–	0				–						
6	60	2nd damping depth	0 to 1000	0				–		○			○	4-82

- Partial parameter of position control type and communication type are different from a table in a shipment parameter.
- Definition of symbols under "Power Off/On" - : if a change is made, it will be reflected upon the parameter when the power to the driver is turned off and then on again.
- Definition of symbols under "Related mode" - P: position control, S: velocity control, T: torque control, F: full closed control

Caution The symbol " * " attached to "Unit" . indicates that the digits of setting unit will change if the parameter is set by using the setup support software PANATERM.

Parametr No.		Title	Range	Default				Unit	Turning on of power supply	Related Control Mode				Detail page
Class	No.			A,B -frame	C -frame	D,E,F -frame	G,H -frame			P	S	T	F	
6	61	1st resonance frequency	0 to 3000	0				0.1Hz		○				4-82
6	62	1st resonance damping ratio	0 to 1000	0				–		○				
6	63	1st anti-resonance frequency	0 to 3000	0				0.1Hz		○				
6	64	1st anti-resonance damping ratio	0 to 1000	0				–		○				
6	65	1st response frequency	0 to 3000	0				0.1Hz		○				
6	66	2nd resonance frequency	0 to 3000	0				0.1Hz		○				
6	67	2nd resonance damping ratio	0 to 1000	0				–		○				
6	68	2nd anti-resonance frequency	0 to 3000	0				0.1Hz		○				
6	69	2nd anti-resonance damping ratio	0 to 1000	0				–		○				4-83
6	70	2nd response frequency	0 to 3000	0				0.1 Hz		○				
6	71	3rd damping depth	0 to 1000	0				–		○			○	
6	72	4th damping depth	0 to 1000	0				–		○			○	
6	73	Load estimation filter	0 to 2500	0				0.01 ms		○	○		○	
6	74	Torque compensation frequency 1	0 to 5000	0				0.1 Hz		○	○		○	
6	75	Torque compensation frequency 2	0 to 5000	0				0.1 Hz		○	○		○	
6	76	Load estimation count	0 to 8	0				–		○	○		○	
6	87	For manufacturer's use	–	0				–						4-84
6	88	Absolute multi-rotation data upper limit	0 to 65534	0				–	○	○	○	○	○	
6	97	Function expansion setting 3	-2147483648 to 2147483647	0				–		○	○	○	○	
6	98	Function expansion setting 4	-2147483648 to 2147483647	0				–	○	○	○	○	○	

- Partial parameter of position control type and communication type are different from a table in a shipment parameter.
- Definition of symbols under "Power Off/On" - : if a change is made, it will be reflected upon the parameter when the power to the driver is turned off and then on again.
- Definition of symbols under "Related mode" - P: position control, S: velocity control, T: torque control, F: full closed control

Caution The symbol " * " attached to "Unit" . indicates that the digits of setting unit will change if the parameter is set by using the setup support software PANATERM.

[Class 7] Special setting

Parametr No.		Title	Range	Default				Unit	Turning on of power supply	Related Control Mode				Detail page
Class	No.			A,B -frame	C -frame	D,E,F -frame	G,H -frame			P	S	T	F	
7	00	For manufacturer's use	–	0				–						4-85
7	01	For manufacturer's use	–	0				–						
7	03	For manufacturer's use	–	0				–						
7	04	Backlash compensation selection	0 to 7	0				–		○				
7	05	Backlash compensation amount	-1073741824 to 1073741823	0				pulse		○				
7	06	Backlash time constant	0 to 6400	0				0.01ms		○				
7	07	For manufacturer's use	–	0				–						
7	08	For manufacturer's use	–	0				–						
7	09	For manufacturer's use	–	0				–						
7	10	For manufacturer's use	–	0				–						
7	11	For manufacturer's use	–	0				–						
7	12	For manufacturer's use	–	0				–						
7	13	For manufacturer's use	–	0				–						
7	14	Main power turn-off warning detection time	0 to 2000	0				ms	○	○	○	○	○	
7	15	For manufacturer's use	–	0				–						
7	16	For manufacturer's use	–	0				–						
7	18	Backlash compensation amount maintaining range	0 to 2147483647	0				Command unit		○				4-86
7	20	For manufacturer's use	–	0				–						

- Partial parameter of position control type and communication type are different from a table in a shipment parameter.
- Definition of symbols under “Power Off/On” - : if a change is made, it will be reflected upon the parameter when the power to the driver is turned off and then on again.
- Definition of symbols under “Related mode” - P: position control, S: velocity control, T: torque control, F: full closed control

Caution The symbol “ * ” attached to “Unit” . indicates that the digits of setting unit will change if the parameter is set by using the setup support software PANATERM.

Parametr No.		Title	Range	Default				Unit	Turning on of power supply	Related Control Mode				Detail page
Class	No.			A,B -frame	C -frame	D,E,F -frame	G,H -frame			P	S	T	F	
7	21	For manufacturer's use	–	1				–						4-86
7	22	Special function enhancement setting 1	-32768 to 32767	0				–						
7	23	For manufacturer's use	–	0				–						
7	24	For manufacturer's use	–	0				–						
7	25	For manufacturer's use	–	0				–						
7	26	For manufacturer's use	–	0				–						
7	27	For manufacturer's use	–	0				–						
7	28	For manufacturer's use	–	0				–						
7	29	For manufacturer's use	–	0				–						
7	30	For manufacturer's use	–	0				–						
7	31	For manufacturer's use	–	0				–						
7	32	For manufacturer's use	–	0				–						
7	33	For manufacturer's use	–	0				–						
7	34	For manufacturer's use	–	0				–						
7	35	For manufacturer's use	–	0				–						
7	36	For manufacturer's use	–	0				–						
7	37	For manufacturer's use	–	0				–						
7	38	For manufacturer's use	–	0				–						
7	39	For manufacturer's use	–	0				–						
7	41	For manufacturer's use	–	0				–						
7	87	For manufacturer's use	–	0				–						
7	91	For manufacturer's use	–	0				–						
7	93	For manufacturer's use	–	0				–						

[Class 8] For manufacturer's use

Parametr No.		Title	Range	Default				Unit	Turning on of power supply	Related Control Mode				Detail page
Class	No.			A,B -frame	C -frame	D,E,F -frame	G,H -frame			P	S	T	F	
8	00	For manufacturer's use	–	0				–						4-87
8	01	For manufacturer's use	–	100				–						

- Partial parameter of position control type and communication type are different from a table in a shipment parameter.
- Definition of symbols under "Power Off/On" - : if a change is made, it will be reflected upon the parameter when the power to the driver is turned off and then on again.
- Definition of symbols under "Related mode" - P: position control, S: velocity control, T: torque control, F: full closed control

Caution The symbol " * " attached to "Unit" . indicates that the digits of setting unit will change if the parameter is set by using the setup support software PANATERM.

Parametr No.		Title	Range	Default				Unit	Turning on of power supply	Related Control Mode				Detail page
Class	No.			A,B -frame	C -frame	D,E,F -frame	G,H -frame			P	S	T	F	
8	02	For manufacturer's use	–	0				–						4-87
8	03	For manufacturer's use	–	0				–						
8	04	For manufacturer's use	–	100				–						
8	05	For manufacturer's use	–	0				–						
8	10	For manufacturer's use	–	0				–						
8	12	For manufacturer's use	–	0				–						
8	13	For manufacturer's use	–	0				–						
8	14	For manufacturer's use	–	0				–						
8	15	For manufacturer's use	–	0				–						
8	19	For manufacturer's use	–	0				–						

[Class 9] For manufacturer's use

Parametr No.		Title	Range	Default				Unit	Turning on of power supply	Related Control Mode				Detail page
Class	No.			A,B -frame	C -frame	D,E,F -frame	G,H -frame			P	S	T	F	
9	00	For manufacturer's use	–	1				–						4-87
9	01	For manufacturer's use	–	0				–						
9	02	For manufacturer's use	–	0				–						
9	03	For manufacturer's use	–	0				–						
9	04	For manufacturer's use	–	0				–						
9	05	For manufacturer's use	–	0				–						
9	06	For manufacturer's use	–	0				–						
9	07	For manufacturer's use	–	0				–						
9	08	For manufacturer's use	–	0				–						
9	09	For manufacturer's use	–	0				–						
9	10	For manufacturer's use	–	0				–						
9	11	For manufacturer's use	–	1				–						
9	12	For manufacturer's use	–	80				–						
9	13	For manufacturer's use	–	50				–						
9	14	For manufacturer's use	–	10				–						

- Partial parameter of position control type and communication type are different from a table in a shipment parameter.
- Definition of symbols under "Power Off/On" - : if a change is made, it will be reflected upon the parameter when the power to the driver is turned off and then on again.
- Definition of symbols under "Related mode" - P: position control, S: velocity control, T: torque control, F: full closed control

Caution The symbol " * " attached to "Unit" . indicates that the digits of setting unit will change if the parameter is set by using the setup support software PANATERM.

Parametr No.		Title	Range	Default				Unit	Turning on of power supply	Related Control Mode				Detail page
Class	No.			A,B -frame	C -frame	D,E,F -frame	G,H -frame			P	S	T	F	
9	17	For manufacturer's use	–	0				–						4-87
9	18	For manufacturer's use	–	0				–						
9	19	For manufacturer's use	–	0				–						
9	20	For manufacturer's use	–	0				–						
9	21	For manufacturer's use	–	0				–						
9	22	For manufacturer's use	–	200				–						
9	23	For manufacturer's use	–	50				–						
9	24	For manufacturer's use	–	100				–						
9	25	For manufacturer's use	–	40				–						
9	26	For manufacturer's use	–	40				–						
9	27	For manufacturer's use	–	1000				–						
9	28	For manufacturer's use	–	1				–						
9	29	For manufacturer's use	–	0				–						
9	30	For manufacturer's use	–	0				–						
9	48	For manufacturer's use	–	0				–						
9	49	For manufacturer's use	–	0				–						
9	50	For manufacturer's use	–	0				–						

[Class 15] For manufacturer's use

Parametr No.		Title	Range	Default				Unit	Turning on of power supply	Related Control Mode				Detail page
Class	No.			A,B -frame	C -frame	D,E,F -frame	G,H -frame			P	S	T	F	
15	00	For manufacturer's use	–	0				–						4-87
15	16	For manufacturer's use	–	2				–						
15	17	For manufacturer's use	–	4				–						
15	30	For manufacturer's use	–	6				–						
15	31	For manufacturer's use	–	5				–						
15	33	For manufacturer's use	–	0				–						
15	34	For manufacturer's use	–	0				–						
15	35	For manufacturer's use	–	0				–						

- Partial parameter of position control type and communication type are different from a table in a shipment parameter.
- Definition of symbols under "Power Off/On" - : if a change is made, it will be reflected upon the parameter when the power to the driver is turned off and then on again.
- Definition of symbols under "Related mode" - P: position control, S: velocity control, T: torque control, F: full closed control

Caution The symbol " * " attached to "Unit" . indicates that the digits of setting unit will change if the parameter is set by using the setup support software PANATERM.

Torque limit setup range is 0 to 300 and default is 300 except the combinations of the motor and the driver listed in the table below.

Frame	Model No.	Applicable motor	Max. value of torque limit
A	MADL□ 01□□	MHMF5AZ◇ 1□□	350
	MADL□ 11□□	MQMF011L1□□	350
		MHMF011L1□□	350
	MADL□ 05□□	MHMF5AZL1□□	350
		MQMF012L1□□	350
		MHMF012L1□□	350
	MADL□ 15□□	MQMF022L1□□	350
		MHMF022L1□□	350
B	MBDL□ 21□□	MQMF021L1□□	350
		MHMF021L1□□	350
	MBDL□ 25□□	MQMF042L1□□	350
		MHMF042L1□□	350
C	MCDL□ 31□□	MQMF041L1□□	350
		MHMF041L1□□	350
	MCDL□ 35□□	MHMF082L1□□	350
D	MDDL□ 45□□	MGMF092L1□□	264
	MDDL□ 55□□	MHMF092L1□□	350
		MGMF132L1□□	281
E	MEDL□ 83□□	MGMF182L1 □□	251
	MEDL□ 93□□	MGMF242L1 □□	296
F	MFDL□ B3□□	MGMF292L1 □□	245
		MGMF442L1 □□	250
G	MGDL□ C3□□	MDMF752L1□□	271
		MGMF552L1□□	291
		MHMF752L1□□	271
H	MHDL□ E3□□	MDMFC12L1□□	259
		MDMFC52L1□□	242
	MHDL□ F3□□	MDMFD22L1□□	257

◇ : L represents the type of rotary encoder for absolute and A represents the type of battery-less absolute.

□□ : Indicates the motor structure.

Caution

- The above limit applies to Pr0.13 (1st torque limit), Pr5.22 (2nd torque limit), Pr5.11 (Torque setup for emergency stop), Pr5.25 (External input positive direction torque limit) and Pr5.26(External input negative direction torque limit).

When you change the motor model, above max. value may change as well. Check and reset the setup values of Pr0.13, Pr5.22, Pr5.11, Pr5.25 and Pr5.26.

Cautions on Replacing the Motor

As stated previously, torque limit setup range might change when you replace the combination of the motor and the driver. Pay attention to the followings.

1. When the motor torque is limited,
   When you replace the motor series or to the different wattage motor, you need to reset the torque limit setup because the rated toque of the motor is different from the previous motor. (see e.g.1)

e.g.1)

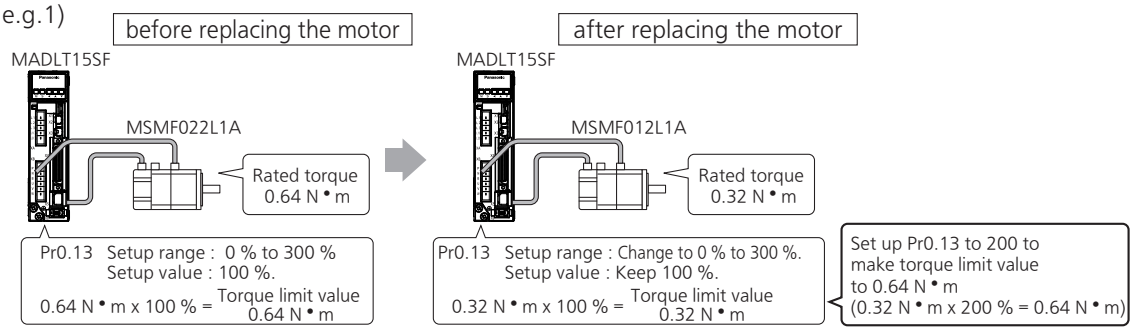

2. When you want to obtain the max. motor torque,
   You need to reset the torque limiting setup to the upper limit, because the upper limit value might be different from the previous motor. (see e.g.2)

e.g.2)

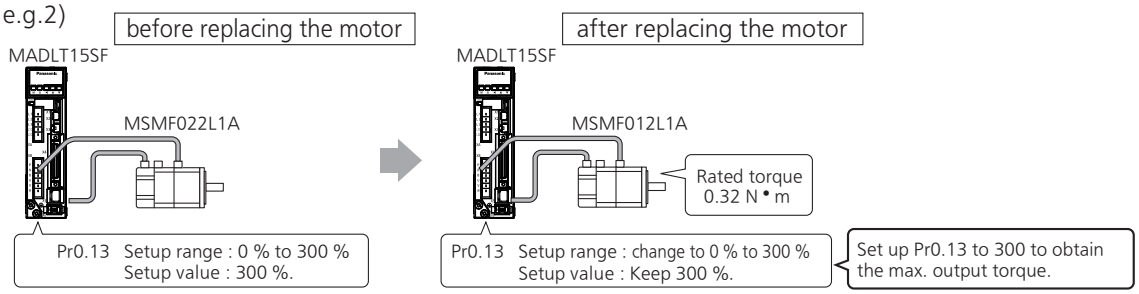

<Note>

Please don't use other combination besides the combination of designation.
For details of combination refer to P.1-34 "4. Check of the Combination of the Driver and the Motor " .

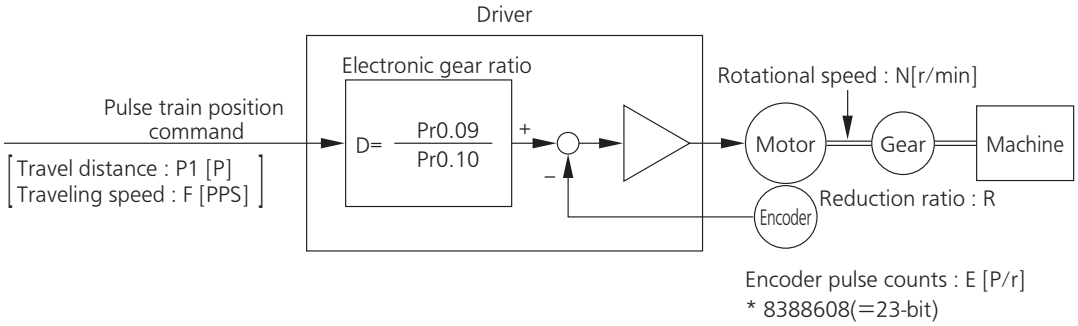

Example of ball screw drive by servo motor

Here we take a ball screw drive as an example of machine.
A travel distance of a ball screw M [mm] corresponding to travel command P1 [P], can be described by the following formula (1) by making the lead of ball screw as L [mm]

$$M = P1 \times (D/E) \times (1/R) \times L \quad \text{..... (1)}$$

therefore, position resolution (travel distance Δ M per one command pulse) will be described by the formula (2)

$$\Delta M = (D/E) \times (1/R) \times L \quad \text{..... (2)}$$

modifying the above formula (2), electronic gear ratio can be found in the formula (3).

$$D = (\Delta M \times E \times R) \times L \quad \text{..... (3)}$$

Actual traveling velocity of ball screw, V[mm/s] can be described by the formula (4) and the motor rotational speed, N at that time can be described by the formula (5).

$$V = F \times (D/E) \times (1/R) \times L \quad \text{..... (4)}$$

$$N = F \times (D/E) \times 60 \quad \text{..... (5)}$$

modifying the above formula (5), electronic gear ratio can be found in the formula (6).

$$D = (N \times E)/ (F \times 60) \quad \text{..... (6)}$$

Note

1) Make a position resolution, Δ M as approx. 1/5 to 1/10 of the machine positioning accuracy, Δ ε , considering a mechanical error.
2) Set up Pr0.09 and Pr0.10 to any values between 1 to 2^{30}.
3) The desired setting can be determined by selecting value of numerator and denominator of electronic gear. However, an excessively high division or multiplication ratio cannot guarantee the operation. The ratio should be in a range between 1/1000 and 1000.
   Excessively high multiplication ratio will cause Err27.2 (command pulse multiplication error protection) due to varying command pulse input or noises, even if the other settings are within the specified range.
4)

2^n	Decimal	2^n	Decimal
2^0	1	2^{12}	4096
2^1	2	2^{13}	8192
2^2	4	2^{14}	16384
2^3	8	2^{15}	32768
2^4	16	2^{16}	65536
2^5	32	2^{17}	131072
2^6	64	2^{18}	262144
2^7	128	2^{19}	524288
2^8	256	2^{20}	1048576
2^9	512	2^{21}	2097152
2^{10}	1024	2^{22}	4194304
2^{11}	2048	2^{23}	8388608

	Electronic gear ratio $D = \frac{\Delta M \times E \times R}{L}$	$D = \frac{Pr0.09}{Pr0.10}$
Lead of ball screw, L =10 mm Gear reduction ratio, R = 1 Position resolution, ΔM =0.005 mm Encoder, 23-bit (E= 2^{23} P/r)	$\frac{0.0005 \times 2^{23} \times 1}{10} = \frac{5 \times 2^{23}}{10 \times 10^4} = \frac{41943040}{100000}$	Pr0.09 = 41943040 Pr0.10 = 100000

	Motor rotational speed (r/min), $N = F \times \frac{D}{E} \times 60$	
Lead of ball screw, L =20 mm Gear reduction ratio, R = 1 Position resolution, ΔM = 0.0005 mm Line driver pulse input, 500 kpps Encoder, 23-bit	$500000 \times \frac{0.0005 \times 2^{23} \times 1}{20} \times \frac{1}{2^{23}} \times 60$ $=750$	
Ditto To make it to 2000 r/min.	Electronic gear ratio $D = \frac{N \times E}{F \times 60}$	$D = \frac{Pr0.09}{Pr0.10}$
	$D = \frac{2000 \times 2^{23}}{500000 \times 60} = \frac{\cancel{2000} \times 2^{23}}{\cancel{2000} \times 500 \times 30} = \frac{8388608}{15000}$	Pr0.09 = 8388608 Pr0.10 = 15000
	Travel distance per command pulse (mm) (Position resolution) $\Delta M = \frac{D}{E} \times \frac{1}{R} \times L$	
	$\frac{2000 \times 2^{23}}{500000 \times 60} \times \frac{1}{2^{23}} \times \frac{1}{1} \times 20 = 0.00133$ mm	

Related page • P.4-12 “Details of Parameter”

Setup with the Front Panel

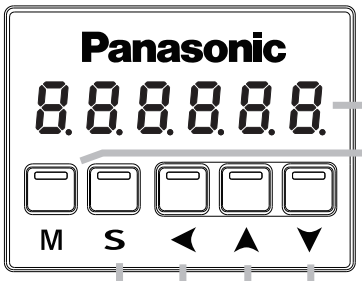

Display LED (6-digit)
Switch to error display screen when error occurs, and LED will flash (about 2 Hz).
LED will flash slowly (about 1 Hz) when warning occurs.

Mode switching button
(valid at SELECTION display)
Press this to switch 4 kinds of mode.
1) Monitor Mode
2) Parameter Set up Mode
3) EEPROM Writing Mode
4) Auxiliary Function Mode

Software version display button
(valid at Monitor Mode execution display)

SET Button (valid at any time)
Press this to switch SELECTION and EXECUTION display.

Press these to change display and data, select parameters and execute actions.
(Change/Selection/Execution is valid to the digit which decimal point flashes.)
Numerical value increases by pressing, ▲ , decreases by pressing ▼ .

Shifting of the digit for data changing to higher digit.

Initial Status of the Front Panel Display (7 Segment LED)

Status

Front panel display shows the following after turning on the power of the driver.

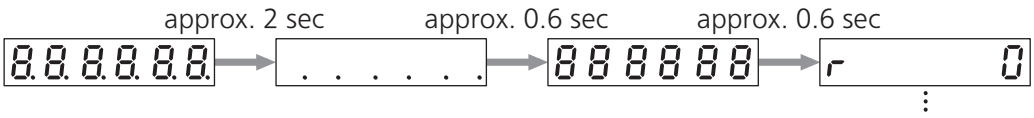

Initial display of LED
(Determined by the setup of Parameter, Pr5.28 "Initial status of LED".)

Upon Occurrence of an Alarm

If a driver alarm is generated, the front panel display shows the following repeatedly.

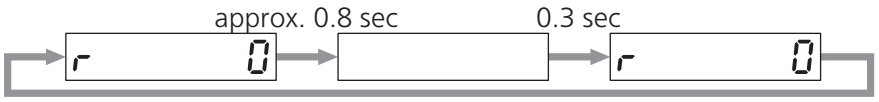

Repeatedly(during continuous alarm)

Related page • P.4-60 “Details of Parameter”

Initial Status of the Front Panel Display (7 Segment LED)

Below shows possible cause of an alarm.

alarm No.	Alarm	Content
A0	Overload protection	Load factor is 85 % or more the protection level.
A1	Over-regeneration alarm	Regenerative load factor is 85 % or more the protection level.
A2	Battery alarm	Battery voltage is 3.2 V or lower.
A3	Fan alarm	Fan has stopped for 1 sec.
A4	Encoder communication alarm	The number of successive encoder communication errors exceeds the specified value.
A5	Encoder overheat alarm	The encoder detects overheat alarm.
A6	Oscillation detection alarm	Oscillation or vibration is detected.
A7	Lifetime detection alarm	The life expectancy of capacity or fan becomes shorter than the specified time.
A8	External scale error alarm	The external scale detects the alarm.
A9	External scale communication alarm	The number of successive external scale communication errors exceeds the specified value.
AC	Deterioration diagnosis warning	Load characteristic estimates and torque command under constant speed has exceeded the set range.
C3	Main power off warning	In case that Pr7.14 (Detection time of main power off warning) is 10 to 1999, the mains power between L1 and L3 has stopped instantaneously for more than the time prescribed in Pr7.14.

Related page • P.4-60 “Details of Parameter”

14. How to Use the Front Panel

Structure of Each Mode

Use each button on the touch panel to select the structure and switch the mode.

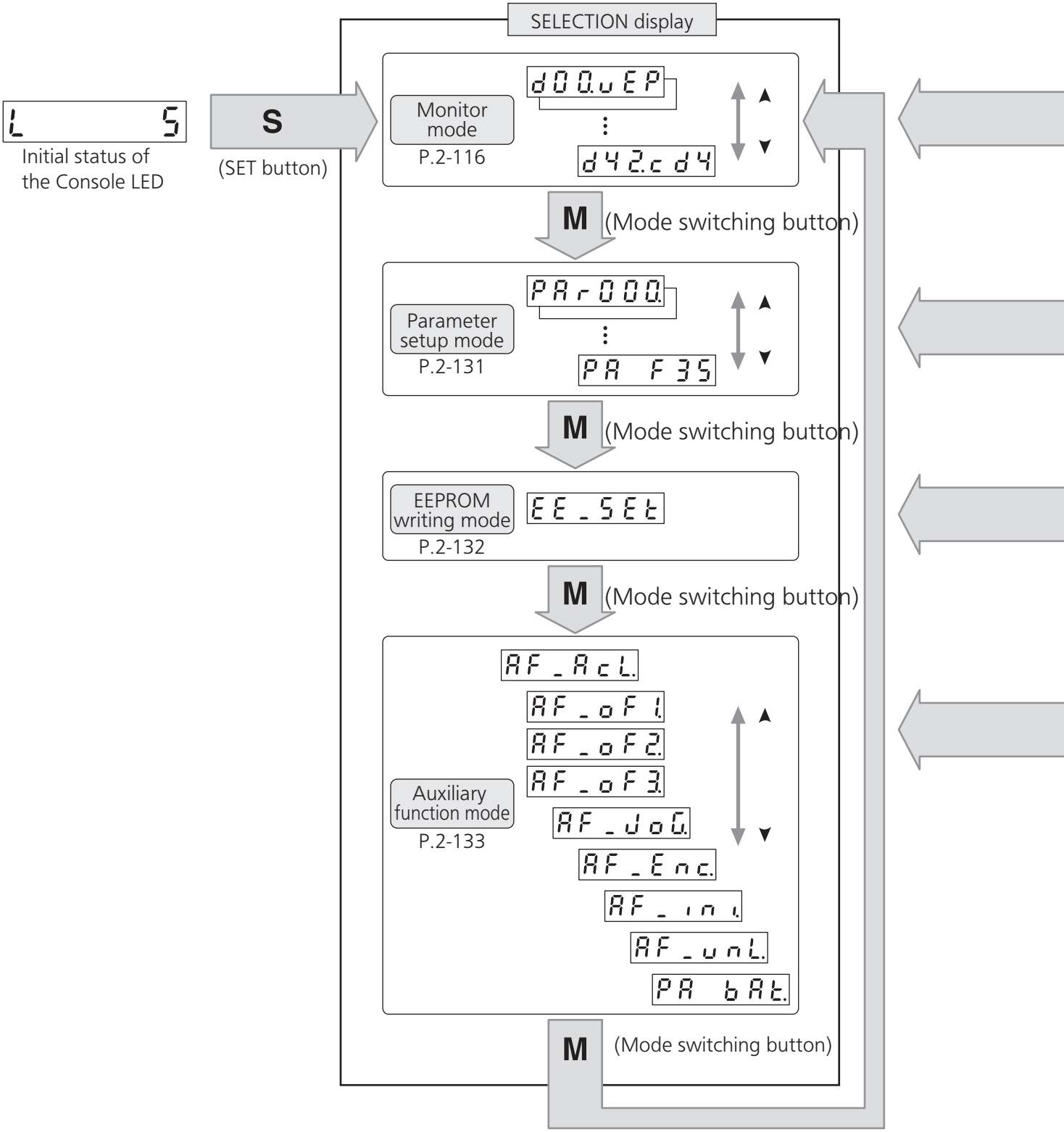

Note You can change the flashing decimal point with ◀ , then shift the digit for data change "."

Caution On power-up, the monitor mode executed is displayed according to the setup of Pr5.28 LED initial status.

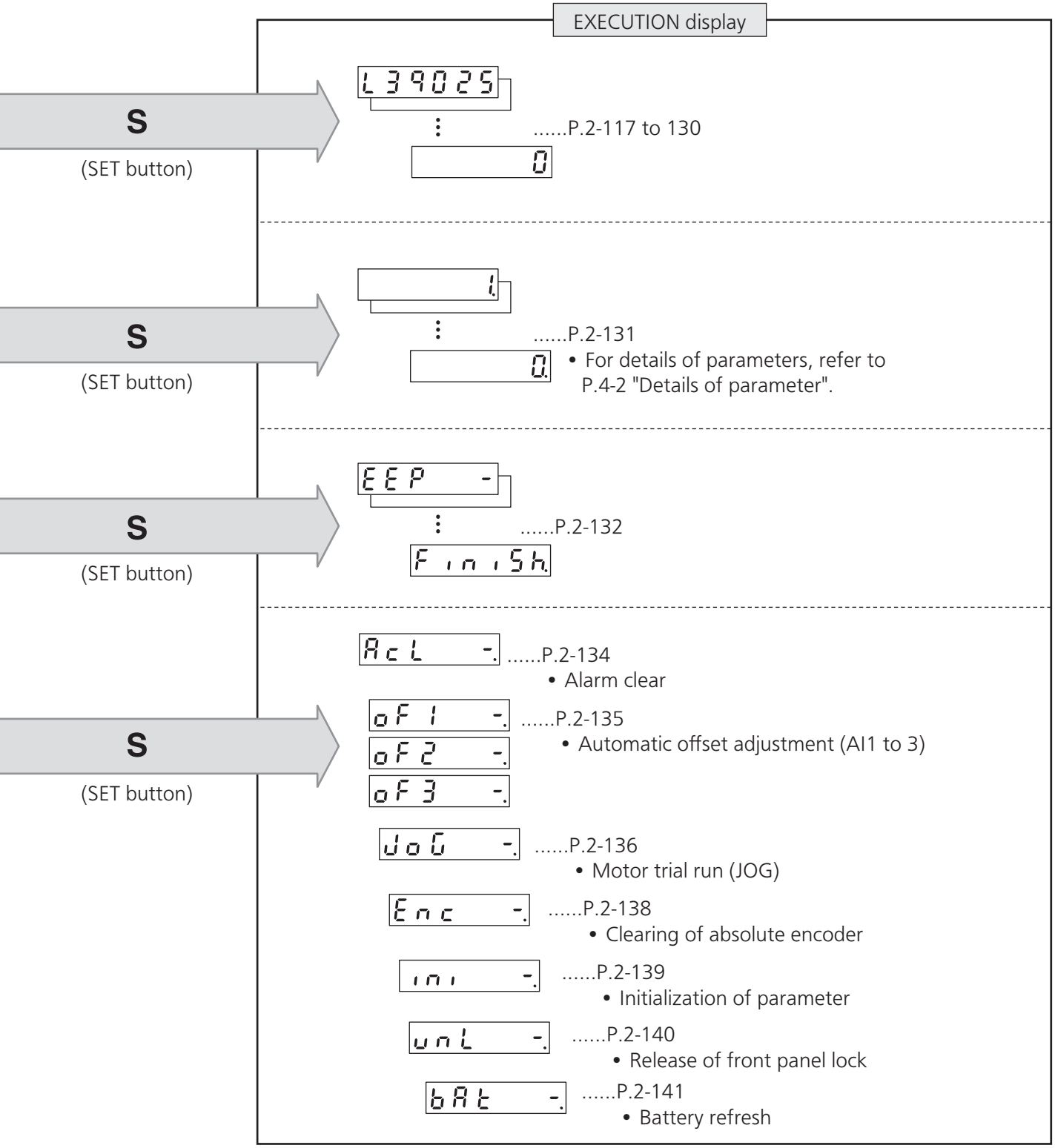
EXECUTION display
S
(SET button)
L 3 9 0 2 5
0
.....P.2-117 to 130
S
(SET button)
1.
0.
.....P.2-131
• For details of parameters, refer to P.4-2 "Details of parameter".
S
(SET button)
E E P -
F i n i S h.
.....P.2-132
S
(SET button)
A c L -.
.....P.2-134
• Alarm clear
o F 1 -.
o F 2 -.
o F 3 -.
.....P.2-135
• Automatic offset adjustment (AI1 to 3)
J o G -.
.....P.2-136
• Motor trial run (JOG)
E n c -.
.....P.2-138
• Clearing of absolute encoder
i n i -.
.....P.2-139
• Initialization of parameter
u n L -.
.....P.2-140
• Release of front panel lock
b A t -.
.....P.2-141
• Battery refresh

14. How to Use the Front Panel

Setup of front panel lock

Outline

To prevent operational error e.g. unintentional parameter modification, the front panel may be locked.
Once locked, operations on the panel are limited as follows:

Mode	Locked panel conditions
Monitor Mode	No limitation: all monitored data can be checked.
Parameter Set up Mode	No parameter can be changed but setting can be checked.
EEPROM Writing Mode	Cannot be run. (No display)
Auxiliary Function Mode	Push SET can only shifts toward “Release of front panel lock” .

How to operate

- Related parameters

Parameter No.		Title	Function
Class	No.		
5	35	Setup of front panel lock	Locks the operation attempted from the front panel.

Lock and unlock can be made in one of two ways.

Procedure	Front panel	Setup support software PANATERM
Lock	(1) Set Pr5.35 “Front panel lock” to 1, and writ the setting to EEPROM. (2) Turn on power to the driver. (3) The front panel is locked.	
Unlock	(1) Execute the auxiliary function mode, front panel lock release function. (2) Turn on power to the driver. (3) The front panel is unlocked.	(1) Set Pr5.35 “Front panel lock” to 0, and writ the setting to EEPROM. (2) Turn on power to the driver. (3) The front panel is unlocked.

Note For details of front panel lock release, refer to P.2-138.

Related page
- P.4-62 “Details of Parameter”

14. How to Use the Front Panel

Exclusive functions by operations performed by communications

Outline

To prevent operations by communication (USB/RS232/RS485/Modbus) and operation from the front panel being in conflict with each other, the following exclusive functions will be triggered depending on their respective state:

Mode	Locked panel conditions
The front panel is in “execution display” other than the monitor mode.	Parameter write and EEPROM write by communications will result in command error and not executed. In addition, connection of set-up support software, PANATERM (USB communication) cannot be established.
Execution right has been acquired by RS232/RS485/Modbus communications.	No operations other than monitor mode can be made from the front panel.
Set-up support software (PANATERM) (USB communication) is connected.	

Please refer to P.7-29 "Communication" for RS232/RS485 communications and to reference (Modbus communication and Block operation Specification) for Modbus communications.

14. How to Use the Front Panel

Monitor Mode (SELECTION display)

To change the monitor display setting, select the display option to be changed from " SELECTION display" , and press **S** to change to " EXECUTION display" . After completion of changing, press **S** to return to the selection display,

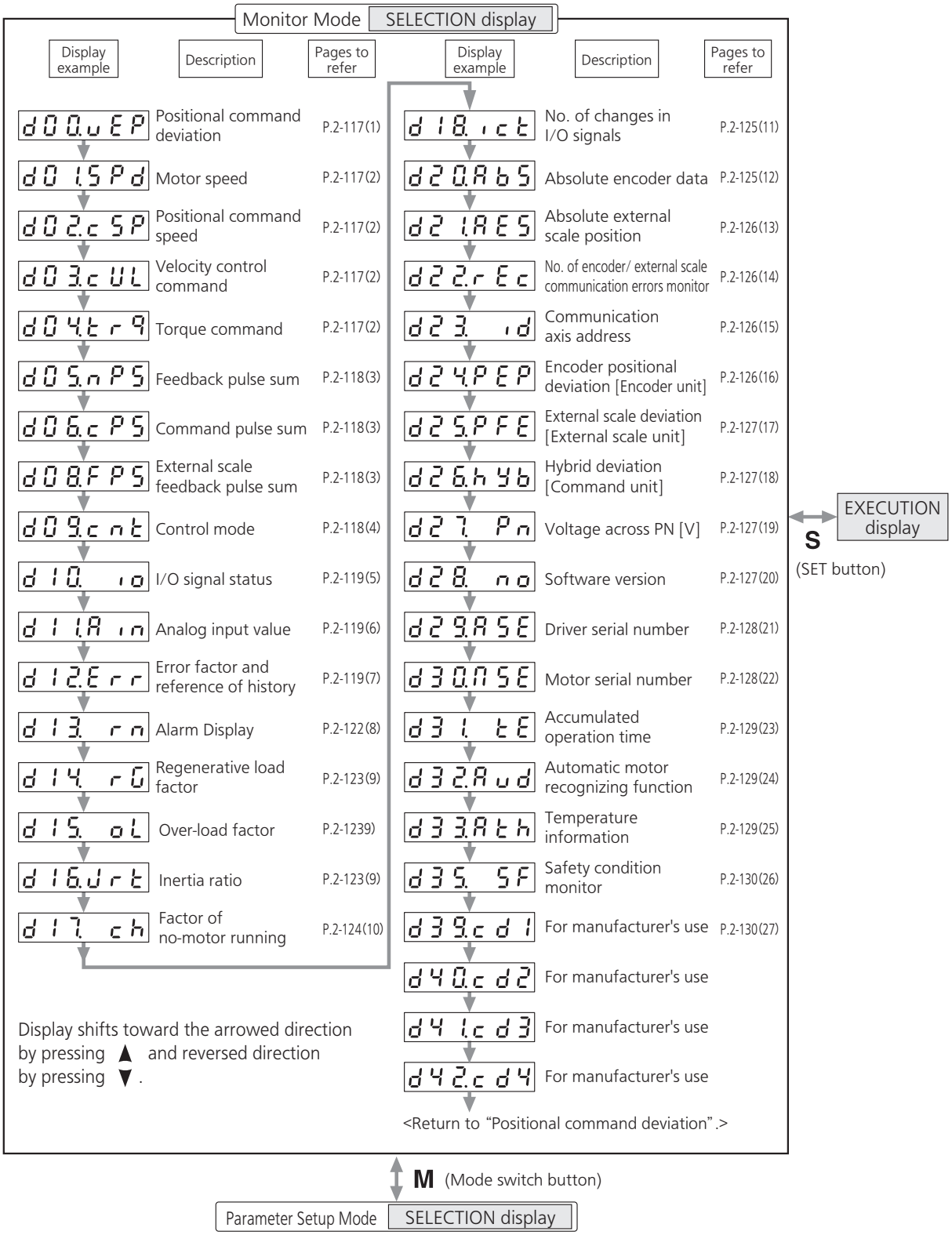

Note When you turn on the Product for the first time, display shows r 0 . (at motor stall)
To change this display, change the setup of Pr5.28 (Initial status of LED).

(1) Display of positional command deviation [command unit]

Displays positional deviation of the command unit in High order or Low order.

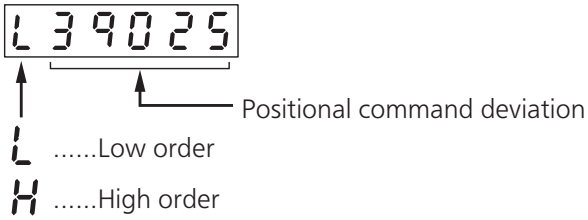

- To switch between Low order (L) and High order (H), press ◄ .

eg. Positional command deviation=10339025

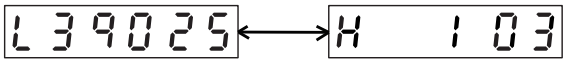

(2) Display of motor speed, positional command speed, velocity control command and torque command

- Motor speed (r/min)

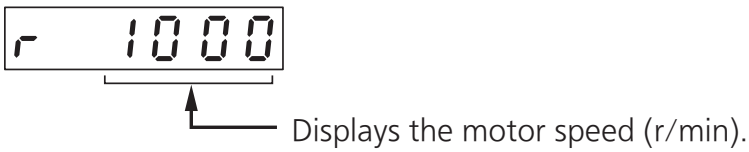

- Positional command speed (r/min)

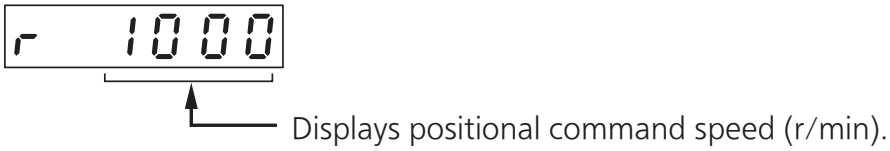

- Velocity control command (r/min)

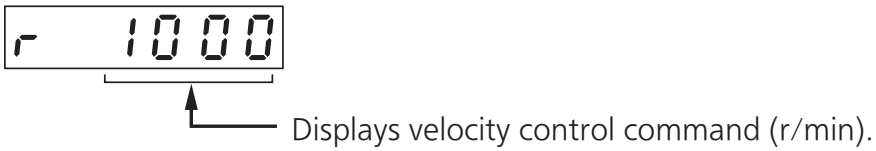

- Torque command (%)

(3) Display of Feedback Pulse Sum, Command Pulse Sum and External Scale Feedback Pulse Sum

- Feedback Pulse Sum [Encoder feedback pulse]

L .....Low order

H .....High order

- To switch between Low order (L) and High order (H), press ◄ .

- Command Pulse Sum [Command Pulse]

L .....Low order

H .....High order

- To switch between Low order (L) and High order (H), press ◄ .

- External Scale Feedback Pulse Sum

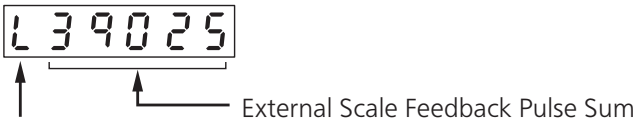

L .....Low order

H .....High order

- To switch between Low order (L) and High order (H), press ◄ .

(4) Display of Control Mode

PoScnt .....Position control mode

SPdcnt .....Velocity control mode

trqcnt .....Torque control mode

FcLcnt .....Full-closed control mode

(5) Display of I/O Signal Status

Displays the control input and output signal to be connected to connector X4.
Use this function to check if the wiring is correct or not.

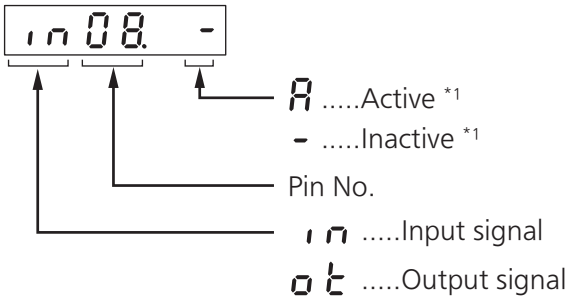

- Shift the flashing decimal point with ◀ .

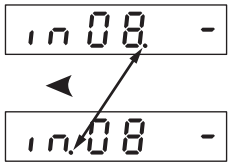

(Right side of decimal point : Pin No. selection)

(Left side of decimal point : Input/Output Pin No. selection)

- Select In or Out by pressing ▲ or ▼ button.

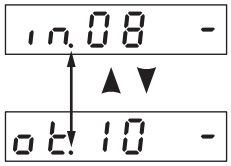

- Select the Pin No. to be monitored by pressing ▲ ▼ .

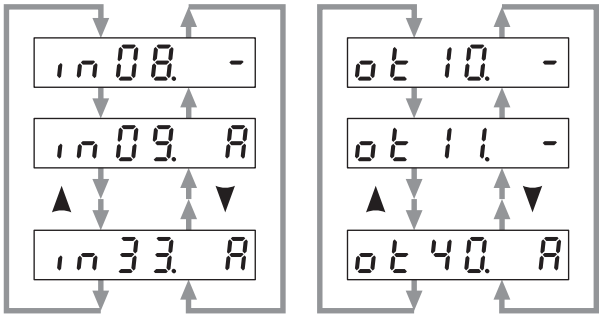

(Lowest place Pin No. of output signal)

(Highest place Pin No. of input signal)

*1 When input signal Active : Input signal photocoupler is ON.
Inactive : Input signal photocoupler is OFF.
When output signal Active : Output signal transistor is ON.
Inactive : Output signal transistor is OFF.

Note For detail of input/output signal, refer to P.3-34 "Inputs and outputs on connector X4"
For detail of Error Code, refer to P.6-3 "Protective Function" .

(6) Display of Analog Input Value

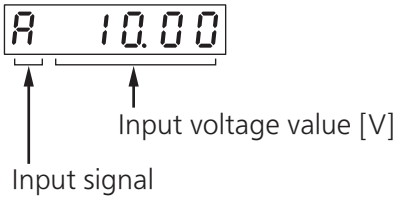

• Select the signal No. to be monitored by pressings ▲ ▼ .

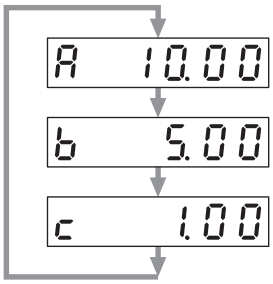

(Analog input 1 value, unit [V]) Displays the value after offset correction.

(Analog input 2 value, unit [V])

(Analog input 3 value, unit [V])

Caution Voltage exceeding ± 10 V can not be displayed correctly.

(7) Display of Error Factor and Reference of History

Error code No. (- - - appears if no error occurs)

Err. .....Present error

E-0. .....History 0 (latest error)

E13. .....History 13 (oldest error)

• You can refer the last 14 error factors (including present one) Press ▲ ▼ to select the factor to be referred.

<List of error code No.>

Error code		Protective function	Attribute		
Main	Sub		History	Can be cleared	Immediate stop
11	0	Control power supply under- voltage protection		○	
12	0	Over-voltage protection	○	○	
13	0	Main power supply under-voltage protection (between P to N)		○	
	1	Main power supply under-voltage protection (AC interception detection)		○	○
14	0	Over-current protection	○		
	1	IPM error protection	○		
15	0	Over-heat protection	○		○
	1	Encoders abnormal over-heat protection	○		○
16	0	Over-load protection	○	○	Switchable
	1	Torque saturation anomaly protection	○	○	
18	0	Over-regeneration load protection	○		○
	1	Over-regeneration Tr error protection	○		
21	0	Encoder communication disconnect error protection	○		
	1	Encoder communication error protection	○		
23	0	Encoder communication data error protection	○		

Error code		Protective function	Attribute		
Main	Sub		History	Can be cleared	Immediate stop
24	0	Position deviation excess protection	○	○	○
	1	Velocity deviation excess protection	○	○	○
25	0	Hybrid deviation excess error protection	○		○
26	0	Over-speed protection	○	○	○
	1	2nd over-speed protection	○	○	
27	0	Command pulse input frequency error protection	○	○	○
	1	Absolute clear abnormal protection	○		
	2	Command pulse multiplier error protection	○	○	○
28	0	Limit of pulse replay error protection	○	○	○
29	0	Deviation counter overflow abnormality protection	○	○	
	1	Counter overflow protection 1	○		
	2	Deviation counter overflow abnormality protection 2	○		
31	0	Safety function error protection 1	○		
	2	Safety function error protection 2	○		

<List of error code No.>

Error code		Protective function	Attribute		
Main	Sub		History	Can be cleared	Immediate stop
33	0	IF overlaps allocation error 1 protection	○		
	1	IF overlaps allocation error 2 protection	○		
	2	IF input function number error 1 protection	○		
	3	IF input function number error 2 protection	○		
	4	IF output function number error 1 protection	○		
	5	IF output function number error 2 protection	○		
	6	CL fitting error protection	○		
	7	INH fitting error protection	○		
34	0	Software limit protection	○	○	
36	0 to 1	EEPROM parameter error protection			
37	0 to 2	EEPROM check code error protection			
38	0	Over-travel inhibit input protection		○	
39	0	Analog input1 excess protection	○	○	○
	1	Analog input2 excess protection	○	○	○
	2	Analog input3 excess protection	○	○	○
40	0	Absolute system down error protection	○	○	
41	0	Absolute counter over error protection	○		
42	0	Absolute over-speed error protection	○	○	
44	0	Single-loop counting error protection	○		
45	0	Multi-loop counting error protection	○		
47	0	Absolute status error protection	○		
48	0	Encoder Z-phase error protection	○		
49	0	Encoder CS signal error protection	○		
50	0	External scale connection error protection	○		
	1	External scale communication error protection	○		
	2	External displacement sensor communication data error protection	○		
51	0	External scale status 0 error protection	○		
	1	External scale status 1 error protection	○		

Error code		Protective function	Attribute		
Main	Sub		History	Can be cleared	Immediate stop
51	2	External scale status 2 error protection	○		
	3	External scale status 3 error protection	○		
	4	External scale status 4 error protection	○		
	5	External scale status 5 error protection	○		
55	0	A-phase connection error protection	○		
	1	B-phase connection error protection	○		
	2	Z-phase connection error protection	○		
70	0	U-phase current detector error protection	○		
	1	W-phase current detector error protection	○		
71	0	CCWTL error protection	○		
	1	CWTL error protection	○		
72	0	Thermal error	○		
80	0	Modbus communications timeout protection	○	○	○
87	0	Compulsory alarm input protection		○	○
92	0	Encoder data recovery abnormal protection	○		
	3	Multi-turn data upper-limit value disagreement error protection	○		
93	0	Parameter setting error protection 1	○		
	1	Block data setting error protection	○	○	
	2	Parameter setting error protection 2	○		
	3	External scale connection error protection	○		
	8	Parameter setting error protection 6	○		
94	0	Block operation error protection	○	○	
	2	Return to origin error protection	○	○	
95	0 to 4	Motor automatic recognition error protection			
96	2	Control unit error protection 1	○		
97	0	Control mode setting error prtection			
98	5	Hardware self-diagnosis error prtection 1	○		
Other number		Other error	○		

Note

History...The error will be stored in the error history.
Can be cleared...To cancel the error, use the alarm clear input (A-CLR).
If the alarm clear input is not effective, turn off power, remove the cause of the error and then turn on power again.
Immediate stop...Instantaneous controlled stop upon occurrence of an error.
(Setting of "Pr.5.10 Sequence at alarm" is also required.)

Caution

1) Certain alarms are not included in the history. For detailed information on alarms e.g. alarm numbers, refer to P.6-3.
2) When one of the errors which are listed in error history occurs, this error and history o shows the same error No.

(8) Alarm Display

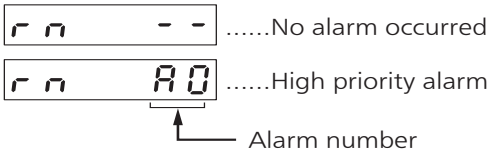

- To display the alarm occurrence condition, press ▲ or ▼ button.

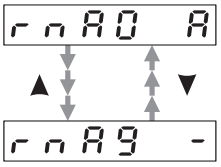

alarm No.	Alarm	Content	Latched time *1
A0	Overload protection	Load factor is 85 % or more the protection level.	1 s to 10 s or ∞
A1	Over-regeneration alarm	Regenerative load factor is 85 % or more the protection level.	10 s or ∞
A2	Battery alarm	Battery voltage is 3.2 V or lower.	Fixed at ∞
A3	Fan alarm	Fan has stopped for 1 sec.	1 s to 10 s or ∞
A4	Encoder communication alarm	The number of successive encoder communication errors exceeds the specified value.	1 s to 10 s or ∞
A5	Encoder overheat alarm	The encoder detects overheat alarm.	1 s to 10 s or ∞
A6	Oscillation detection alarm	Oscillation or vibration is detected.	1 s to 10 s or ∞
A7	Lifetime detection alarm	Life expectancy of capacitor or fan is short.	Fixed at ∞
A8	External scale error alarm	The external scale detects the alarm.	1 s to 10 s or ∞
A9	External scale communication alarm	The number of successive external scale communication errors exceeds the specified value.	1 s to 10 s or ∞
AC	Deterioration diagnosis warning	Load characteristic estimates and torque command under constant speed has exceeded the set range.	1 s to 10 s or ∞
C3	Main power off warning	In case that Pr7.14 (Detection time of main power off warning) is 10 to 1999, the mains power between L1 and L3 has stopped instantaneously for more than the time prescribed in Pr7.14.	1 s to 10 s or ∞

*1 Alarms can be cleared by using the alarm clear. Because the all existing alarms are kept cleared while the alarm clear input (A-CLR) is kept ON, be sure to turn it OFF during normal operation. Either 1 s to 10 s or ∞ can be selected by using user parameter.
Exception: Battery alarm is fixed at ∞ because it is latched by the encoder.
Because the end of life alarm means that the life expectancy cannot be extended, the alarm is set at ∞ .

(9) Display of Regenerative Load Factor, Over-load Factor and Inertia Ratio

- Regenerative Load Factor

Display the ratio (%) against the alarm trigger level of regenerative protection.
This is valid when Pr0.16 (External regenerative resistor setup) is 0 or 1.

- Over-load Factor

Displays the ratio (%) against the rated load.
Refer to P.6-17, "Overload Protection Time Characteristics" of When in Trouble.

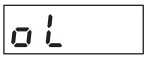

Overload factor (%)

- Displays Overload factor by pressing ▲ or ▼ button.

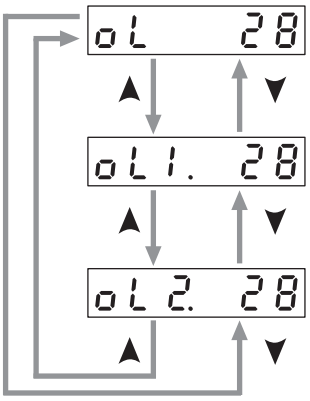

Overload factor (%)

For manufacturer's use

For manufacturer's use

Displays the Overload factor witch is bigger in Overload factor 1 and 2.

- Inertia Ratio

Displays the inertia ratio (%) .
Value of Pr0.04 (Inertia Ratio) will be displayed as it is.

(10) Display of the Factor of No-Motor Running

Displays the factor of no-motor running in number.

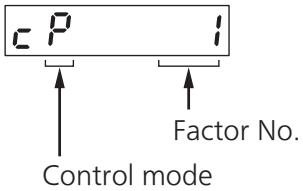

P .....Position control
t .....Torque control
S ..... Velocity control
F ..... Full-closed control

- Explanation of factor No.

Factor No.	Factor	Related Control Mode				Content
		P	S	T	F	
flashing	Occurrence of error/alarm	○	○	○	○	An error is occurring, and an alarm is triggered.
0	No particular factor	○	○	○	○	No factor is detected for No-motor run. The motor runs in normal case.
1	Main power shutoff	○	○	○	○	The main power of the driver is not turned on.
2	No entry of SRV-ON input	○	○	○	○	The Servo-ON input (SRV-ON) is not connected to COM−.
3	Over-travel inhibition input is valid	○	○	○	○	While Pr5.04 is 0 (Run-inhibition input is valid), • Positive direction over-travel inhibition input (POT) is open and speed command is Positive direction. • Negative direction over-travel inhibition input (NOT) is open and speed command is Negative direction.
4	Torque limit setup is small	○	○	○	○	Either one of the valid torque limit setup value of Pr0.13 (1st) or Pr5.22 (2nd) is set to 5 % or lower than the rating.
5	Analog torque limit input is valid.	○	○		○	While Pr5.21 is 0 (analog torque limit input accepted), • Positive direction analog torque limit input (P-ATL) is negative voltage and speed command is Positive direction. • Negative direction analog torque limit input (N-ATL) is positive voltage and speed command is Negative direction.
6	INH input is valid.	○			○	Pr5.18 is 0 or 2 (Command pulse inhibition input is valid.), and INH is open.
7	Command pulse input frequency is low.	○			○	The position command per each control cycle is 1 pulse or smaller due to, • No correct entry of command pulse • No correct connection to the input selected with Pr0.05. • No matching to input status selected with Pr0.06 pr Pr0.07.
8	CL input is valid.	○			○	While Pr5.17 is 0 (Deviation counter clear at level), the deviation counter clear input (CL) is connected to COM−.
9	ZEROSPD input is valid.		○	○		While Pr3.15 is 1 (Speed zero clamp is valid.), the speed zero clamp input (ZEROSPD) is open.
10	External speed command is small.		○			While the analog speed command is selected, the analog speed command is smaller than 0.06[V].
11	Internal speed command is 0.		○			While the internal speed command is selected, the internal speed command is set to lower than 30 [r/min]
12	Torque command is small.			○		The analog torque command input (SPR or P-ATL) is smaller than 5 [%] of the rating.
13	Speed limit is small.			○		• While Pr3.17 is 0 (speed is limited by 4th speed of internal speed), Pr3.07, (4th speed of speed setup) is set to lower than 30 [r/min]. • While Pr3.17 is 1 (speed is limited by SPR input), the analog speed limit input (SPR) is smaller than 0.06 [V].
14	Other factor	○	○	○	○	The motor runs at 20 [r/min] or lower even though the factors from 1 to 13 are cleared, (the command is small, the load is heavy, the motor lock or hitting, driver/motor fault etc.)

Note * Motor might run even though the other number than 0 is displayed.
Refer to "6.In trouble".

(11) Display of No. of changes in I/O signals

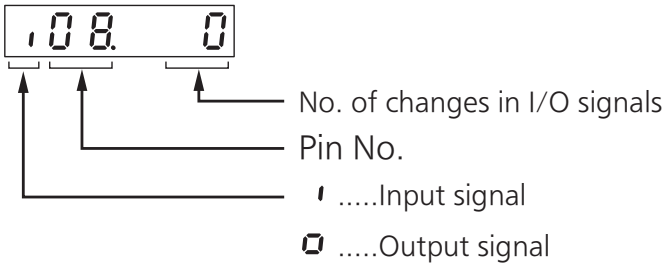

- Shift the flashing decimal point with ◀ .

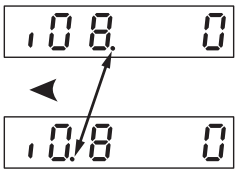

- The switch of input/output, by pressing ▲ or ▼ button.

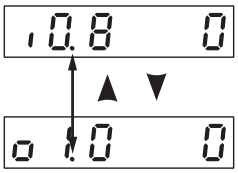

- Select the No. of pin, the number of changes on that pin should be displayed, by pressing ▲ or ▼ button.

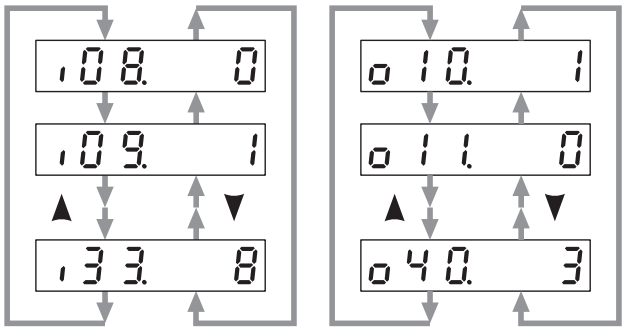

(12) Display of absolute encoder data

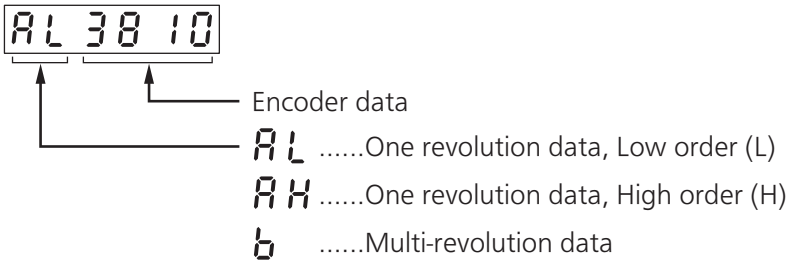

- Select the data to be displayed by pressing ▲ or ▼ button.

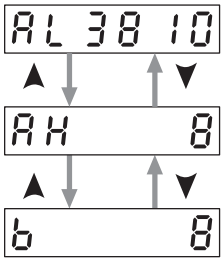

(13) Display of absolute external scale position

- Displays the absolute position of serial absolute scale.
- If a serial incremental scale, displays the scale position relative to the power on position which is defined as 0.

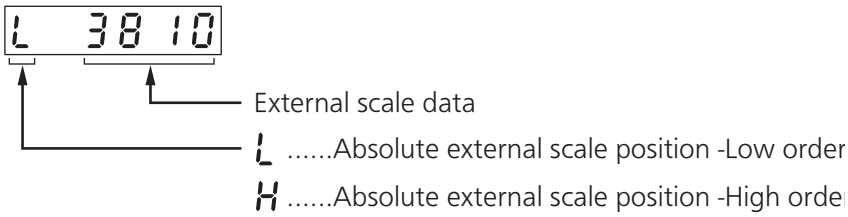

- Select encoder or external scale by pressing ▲ or ▼ button.

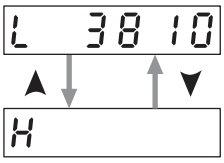

(14) Display of No. of encoder/ external scale communication errors monitor

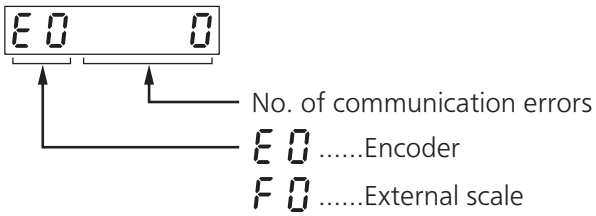

- Select encoder or external scale by pressing ▲ or ▼ button.

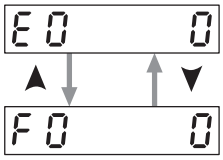

(15) Display of communication axis address

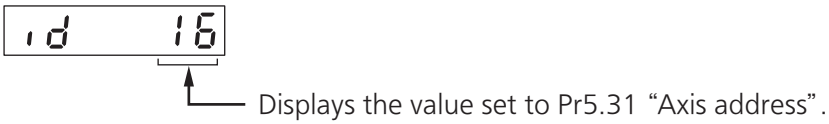

(16) Display of encoder positional deviation [Encoder unit]

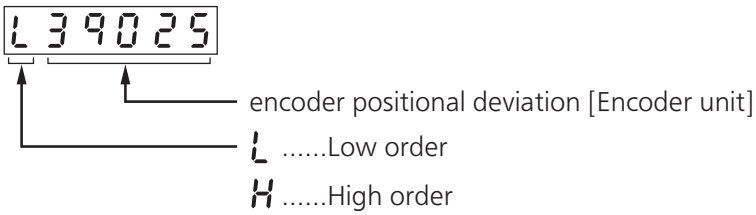

- To switch between Low order (L) and High order (H), press ◄ .

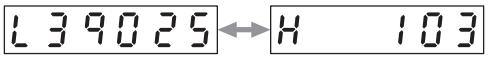

(17) Display of External Scale Deviation [External Scale Unit]

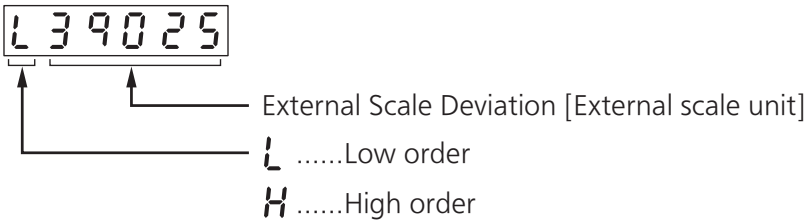

- To switch between Low order (L) and High order (H), press ◄ .

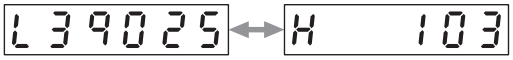

(18) Display of hybrid deviation [Command unit]

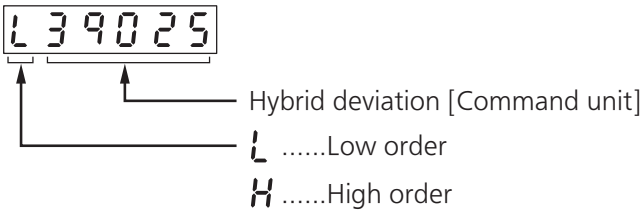

- To switch between Low order (L) and High order (H), press ◄ .

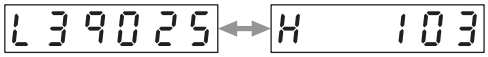

(19) Display of voltage across PN [V]

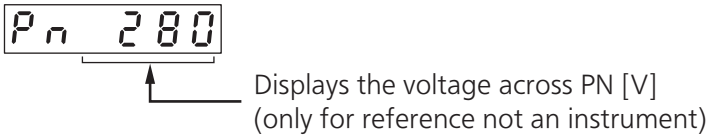

(20) Display of Software Version

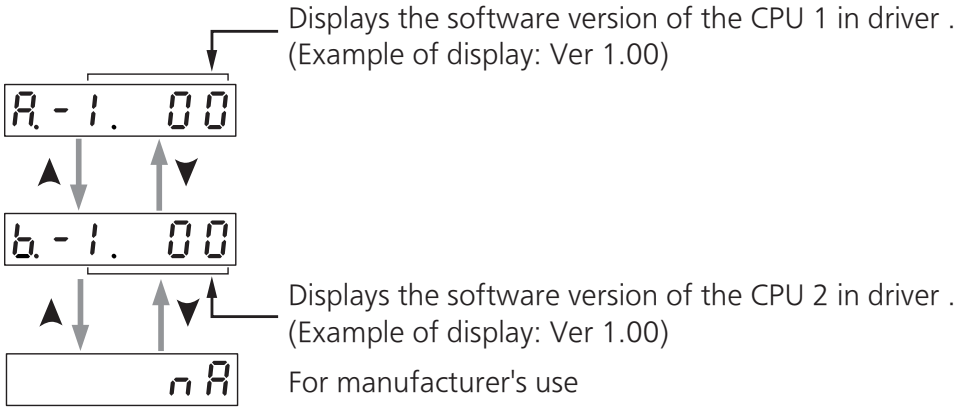

(21) Display of driver serial number

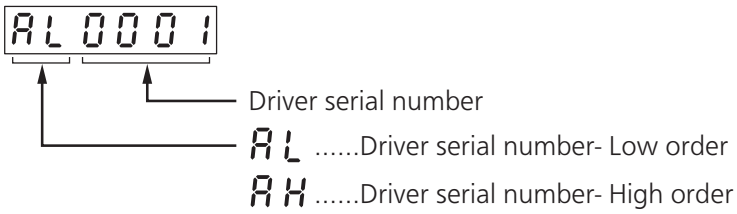

- To switch between Low order (L) and High order (H), press ▲ or ▼ .
  (Example of display: Serial number P15040001N)

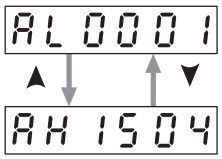

When the serial number contains English letters, as shown on the right.

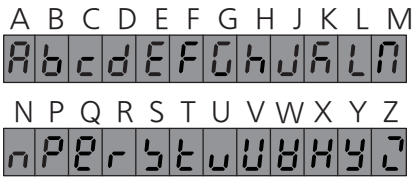

(22) Display of motor serial number

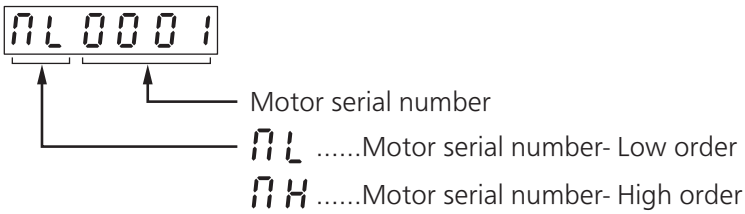

- To switch between Low order (L) and High order (H), press ▲ or ▼ .
  (Example of display: Serial number 15040001N)

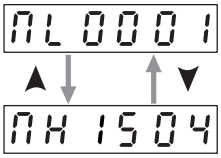

When the serial number contains English letters, as shown on the right.

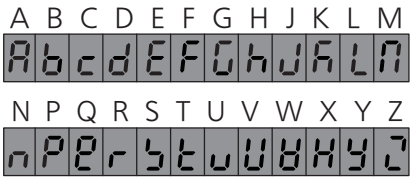

(23) Display of accumulated operation time

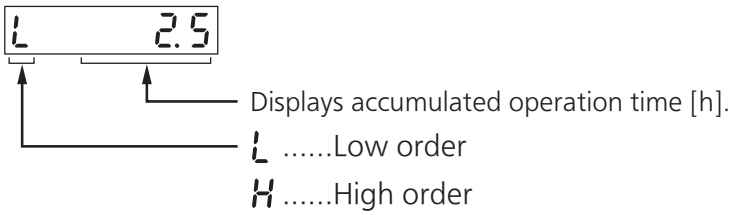

- To switch between Low order (L) and High order (H), press ◄ .

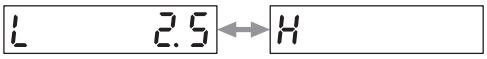

(24) Automatic Motor Recognizing Function

.....Automatic recognition is valid.

.....Automatic recognition is invalid.

(25) Display of temperature

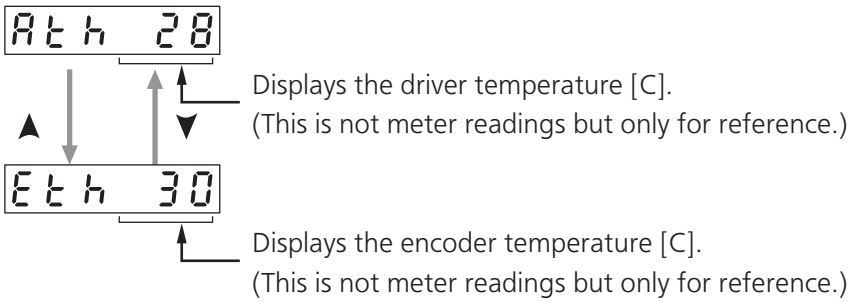

Related page P.7-3 “safety” .

(26) Display of safety condition monitor

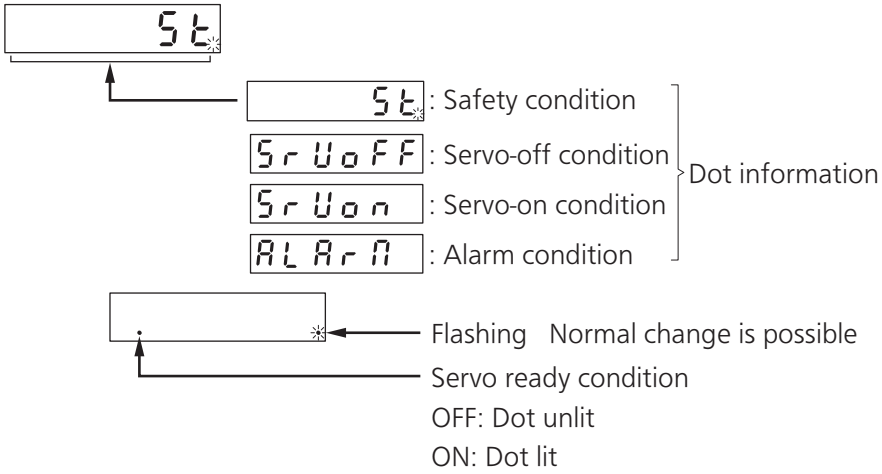

- Select desired monitor option by pressing ▲ or ▼ button.

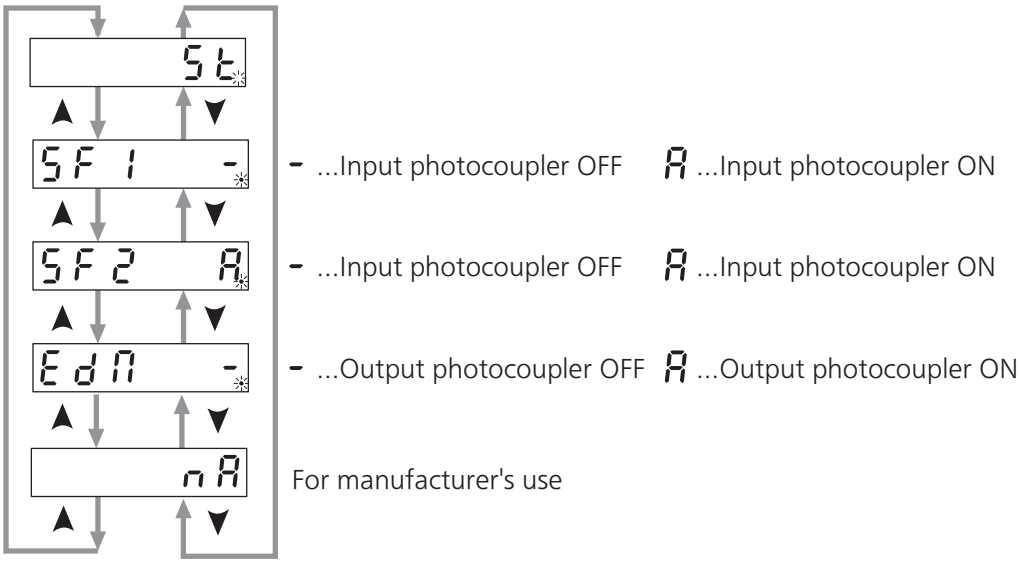

(27) Motor power consumption

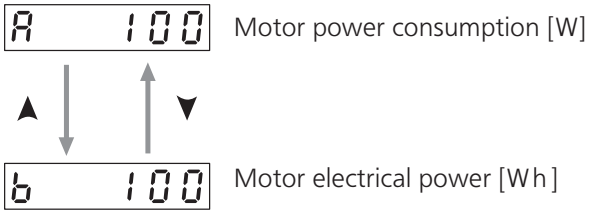

Precautions)
If the monitor data is displayed with lower (L) and higher (H), displays of the front panel are as follows.
Example 1) Monitor data = 15000 (within the display range of lower (L)) .

eg.1) Monitor data=15000(within the display range of lower (L))

eg.2) Monitor data=10315000(if data exceeds the display range of lower (L))

Display of L chang to L'

14. How to Use the Front Panel

Parameter Setup Mode

Monitor Mode | SELECTION display

M (Mode switch button)

Parameter Setup Mode | SELECTION display

PAr000

Parameter No. (Hexadecimal No.)

Class

Note

For parameters which place is displayed with " r ", the content changed and written to EEPROM becomes valid after turning off the power once.

The letter " r " is not displayed before the classification number for Classification 56 to 60.

The third digit of the parameter number is not displayed.

- Press ▲ or ▼ to select parameter No. to be set.

PAr000 Pr0.00

PAr001 Pr0.01

▲ ▼

PA017 Pr0.17

PA018 Pr0.18

PAr000 Pr0.00

- Press ◄ and the flashing decimal separator shifts to the high order position, allowing the figure at this digit to any other figure.

PAr001 Pr0.01

PAr011 Pr0.11

PA111 Pr1.11

- Display the No. of parameter to be changed and press **S** to change to EXECUTION display.

S (SET button)

EXECUTION display

1000

You can change the value which digit has a flashing decimal point.

Parameter value

- Press ▲ or ▼ to set up the value of parameter. (Value increases with ▲ decreases with ▼ .)
- Press ◄ and the flashing decimal separator shifts to the high order position, allowing the figure at this digit to any other figure.
- Long pressing of **S** can update the parameter in the driver, and returns to the parameter number display screen. Note that the parameter value selected by ▲ or ▼ is not reflected until **S** is pressed in this way.
- To cancel the value selected by ▲ or ▼ , press **S** instead of **M** , and the driver internal parameter value is kept unchanged and the display returns to the parameter number display screen.

Remarks

After changing the parameter value and pressing **S** , the content will be reflected in the control. Do not extremely change the parameter value which change might affect the motor movement very much (especially velocity loop or position loop gains).

M (Mode switch button)

EEPROM Writing Mode | SELECTION display

Note

- After setting up parameters, return to SELECT mode, referring to structure of each mode (P.2-112).
- Each parameter has a limit in number of places for upper-shifting.

14. How to Use the Front Panel

EEPROM Writing Mode

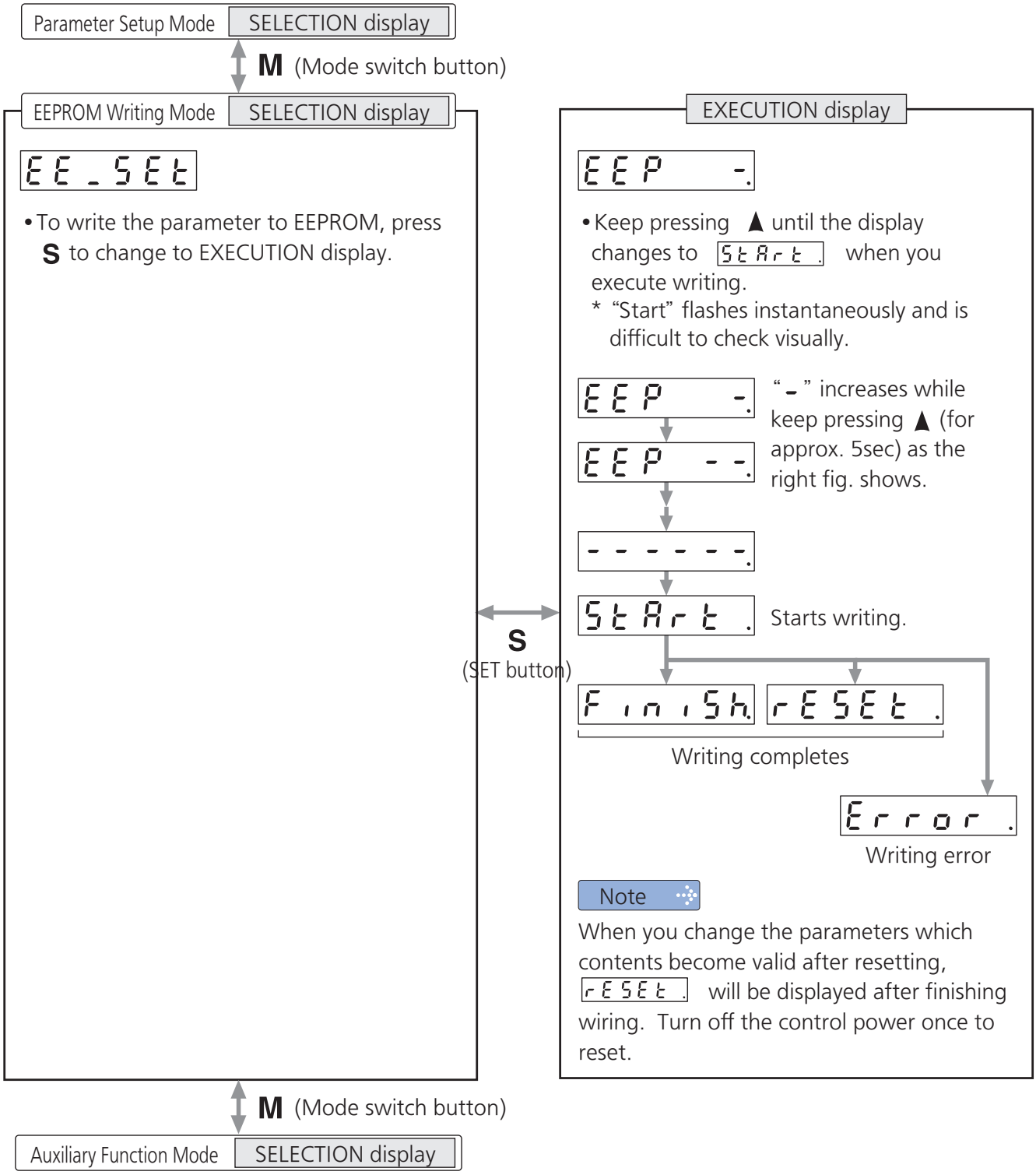

Caution

1. When writing error occurs, make writing again. If the writing error repeats many times, this might be a failure.
2. Don't turn off the power during EEPROM writing. Incorrect data might be written. If this happens, set up all of parameters again, and re-write after checking the data.
3. When the error defined by Err11.0 "Under voltage protection of control power supply" occurs, Error. is displayed indicating that no writing is made to EEPROM.

14. How to Use the Front Panel

Auxiliary Function Mode (SELECTION display)

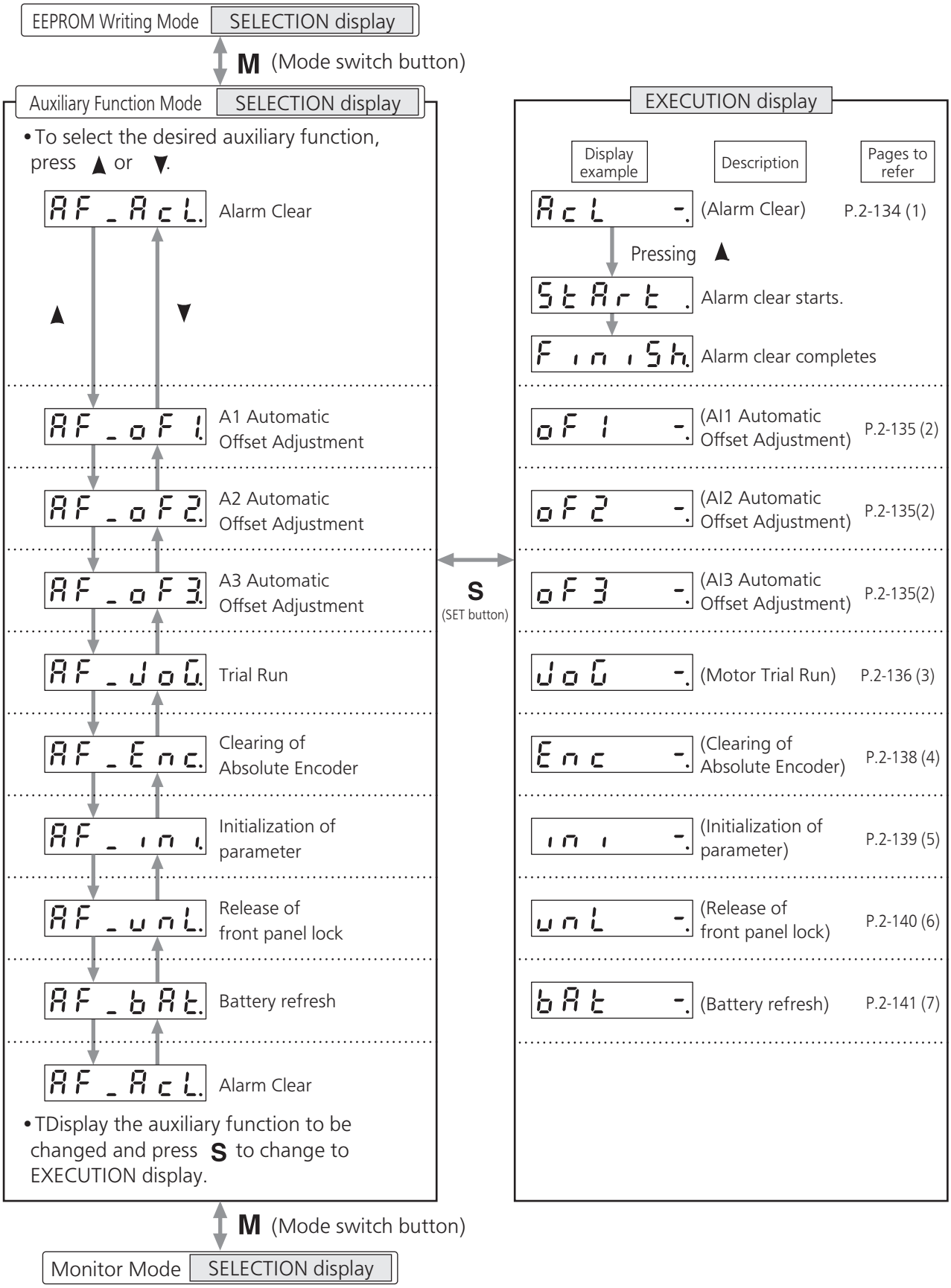

(1) Alarm Clear Screen

This function releases the current alarm status.
Certain alarms will persist. If this is the case, refer to P.6-3 “When in Trouble - Protective Function” .

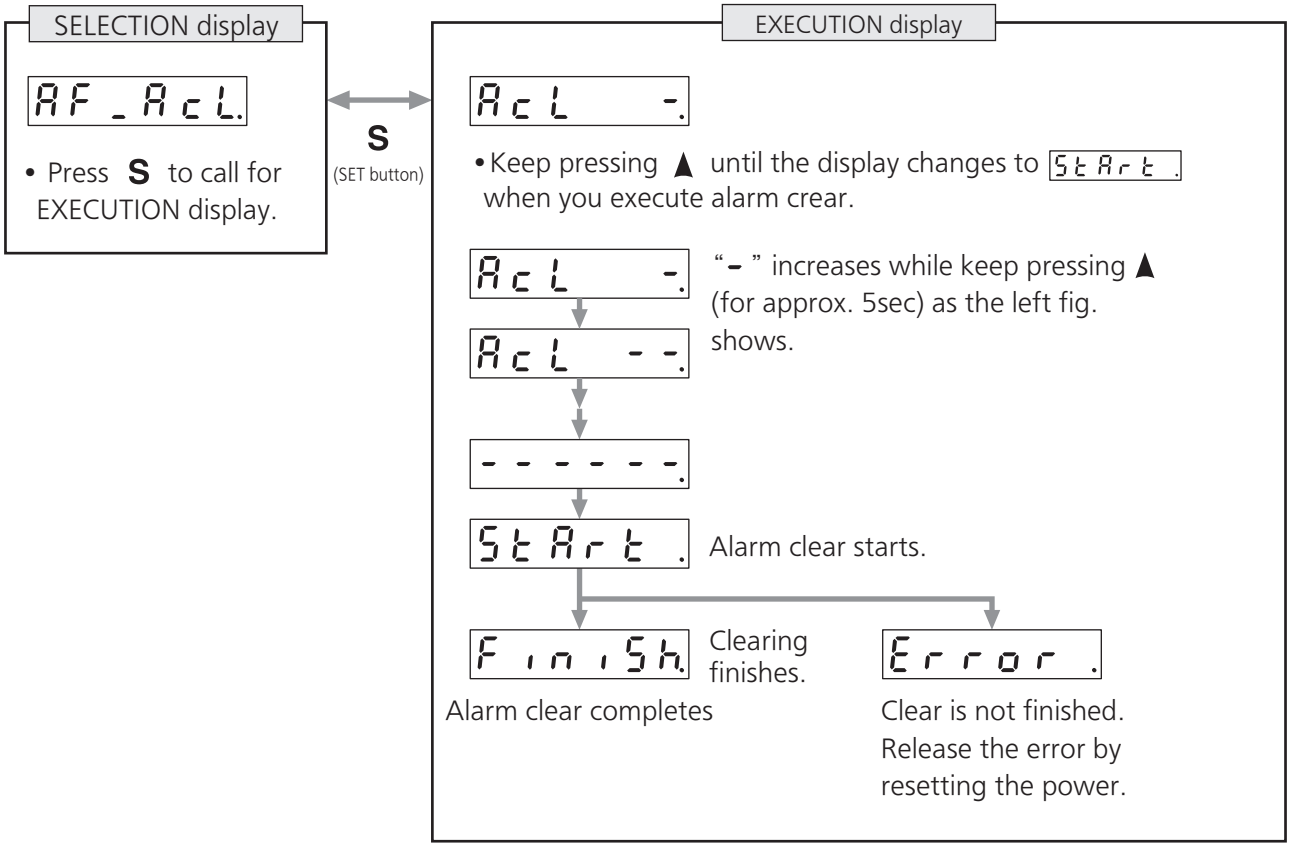

Note
- After alarm cleaning, return to SELECTION display, referring to structure of each mode (P.2-112).

(2) Analog inputs 1 to 3 automatic offset adjustment

This function automatically adjusts offset setting of analog input.
Analog input 1 (AI1).....Pr4.22 (Analog input 1 (AI1) offset setup)
Analog input 2 (AI2).....Pr4.25 (Analog input 2 (AI2) offset setup)
Analog input 3 (AI3).....Pr4.28 (Analog input 3 (AI3) offset setup)

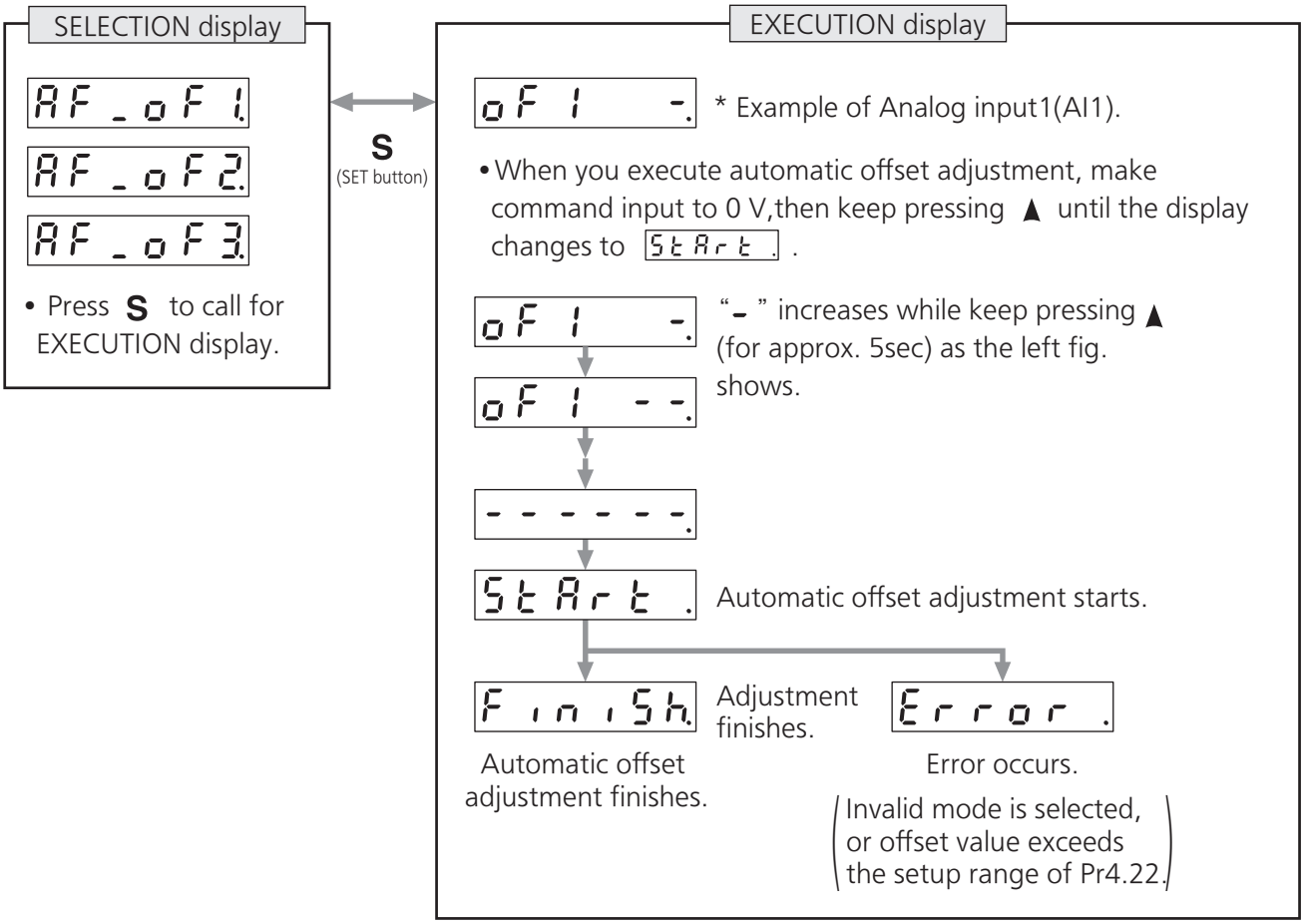

Remarks

- You cannot write the data only by executing automatic offset adjustment.
  Execute a writing to EEPROM when you need to reflect the result afterward.

Note

- After completion of the automatic offset adjustment, return to SELECTION display by referring to P.2-112 "Structure of Each Mode".

(3) Motor trial run

You can make a trial run (JOG run) without connecting the Connector, Connector X4 to the host controller such as PLC.

Remarks

- Separate the motor from the load, detach the Connector, Connector X4 before the trial run.
- Bring the user parameter setups (especially Pr0.04 and Pr1.01 to 1.04) to defaults, to avoid oscillation or other failure.

• Inspection Before Trial Run

(1) Inspection on wiring
- Miswiring ? (Especially power input and motor output)
- Short or grounded ?
- Loose connection ?

(2) Confirmation of power supply and voltage
- Rated voltage ?

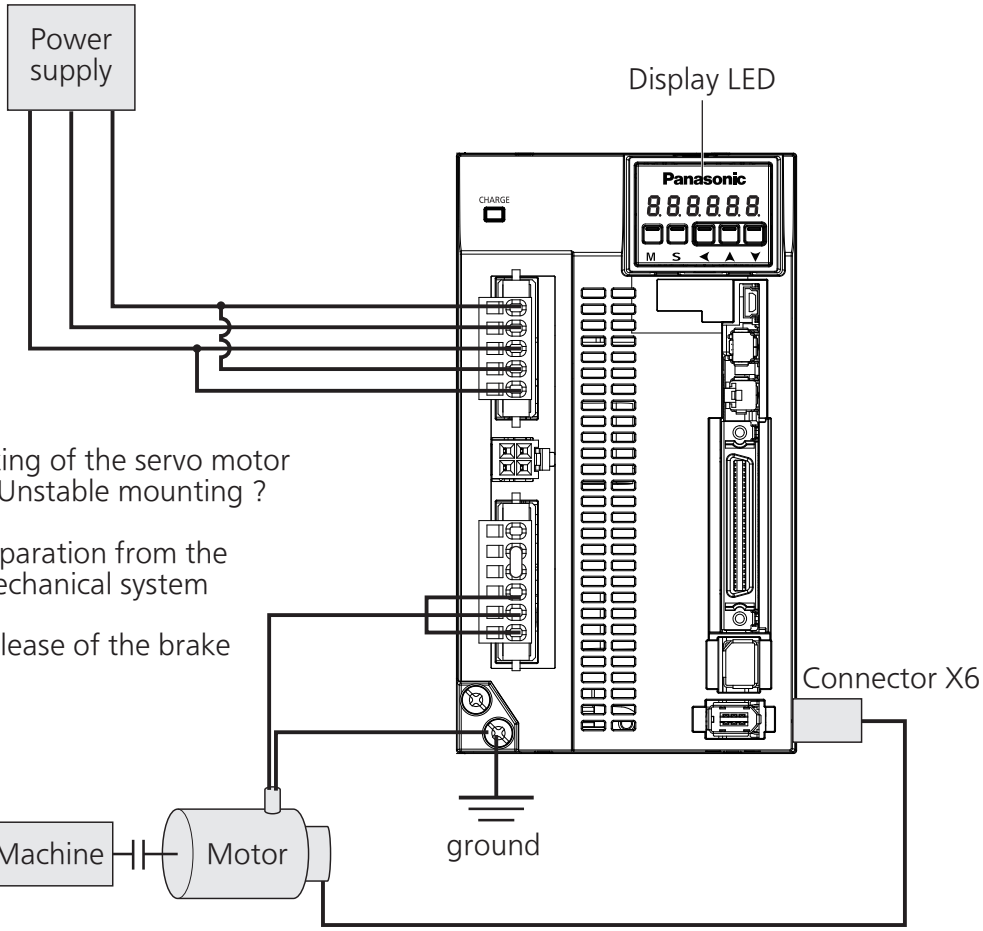

(3) Fixing of the servo motor
- Unstable mounting ?

(4) Separation from the mechanical system

(5) Release of the brake

(6) Turn to Servo-OFF after finishing the trial run by pressing **S** .

Related page
- For wiring details, refer to P2-12 "Overall Wiring" .
- P.4-10 "Pr0.04"
- P.4-17 "Pr1.01 to 1.04"

• Procedure for Trial Run

SELECTION display

AF_JoG

• Press **S** to call for EXECUTION display.

S (SET button)

EXECUTION display

JoG -.

• Keep pressing ▲ until the display changes to rEAdy. when you execute Motor trial run.

JoG -.
JoG --.
------.

"-" increases while keep pressing ▲ (for approx. 5sec) as the left fig. shows.

rEAdy. — Preparation step 1

Error. — Not a servo-ready status. (Shuts off the main when error occurs.)

• Then keep pressing ◀ until the display of LED changes to SrU_on.

rEAdy.
rEAdy.
r.EAdy

Keep pressing ◀ (approx. 5 sec) to shift the decimal point toward left as the left fig. shows.

SrU_on. — Preparation step 2

Error. — Not a Servo-Ready. Or SRV-ON signal is not entered.

• After the Servo-ON of preparation step 2 for trial run, the motor runs at the preset speed with Pr6.04 (JPG speed) to Positive direction direction by pressing ▲ Negative direction by pressing ▼.

Caution

- Before starting the trial run, set the gain-related parameters to appropriate values to avoid problems such as oscillation. If the load is removed, be sure to set Pr0.04 "Inertia Ratio" to 0.
- During the trial run, use the velocity control mode. Various settings including parameters should assure safe and positive operation under appropriate velocity control.
- If SRV-ON becomes valid during trial run, the display changes to Error. which is normal run through external command.

Note

- After finished trial running, return to SELECTION display, referring to structure of each mode (P.2-112).

(4) Clearing of Absolute Encoder

You can clear the multi-turn data of the absolute encoder.

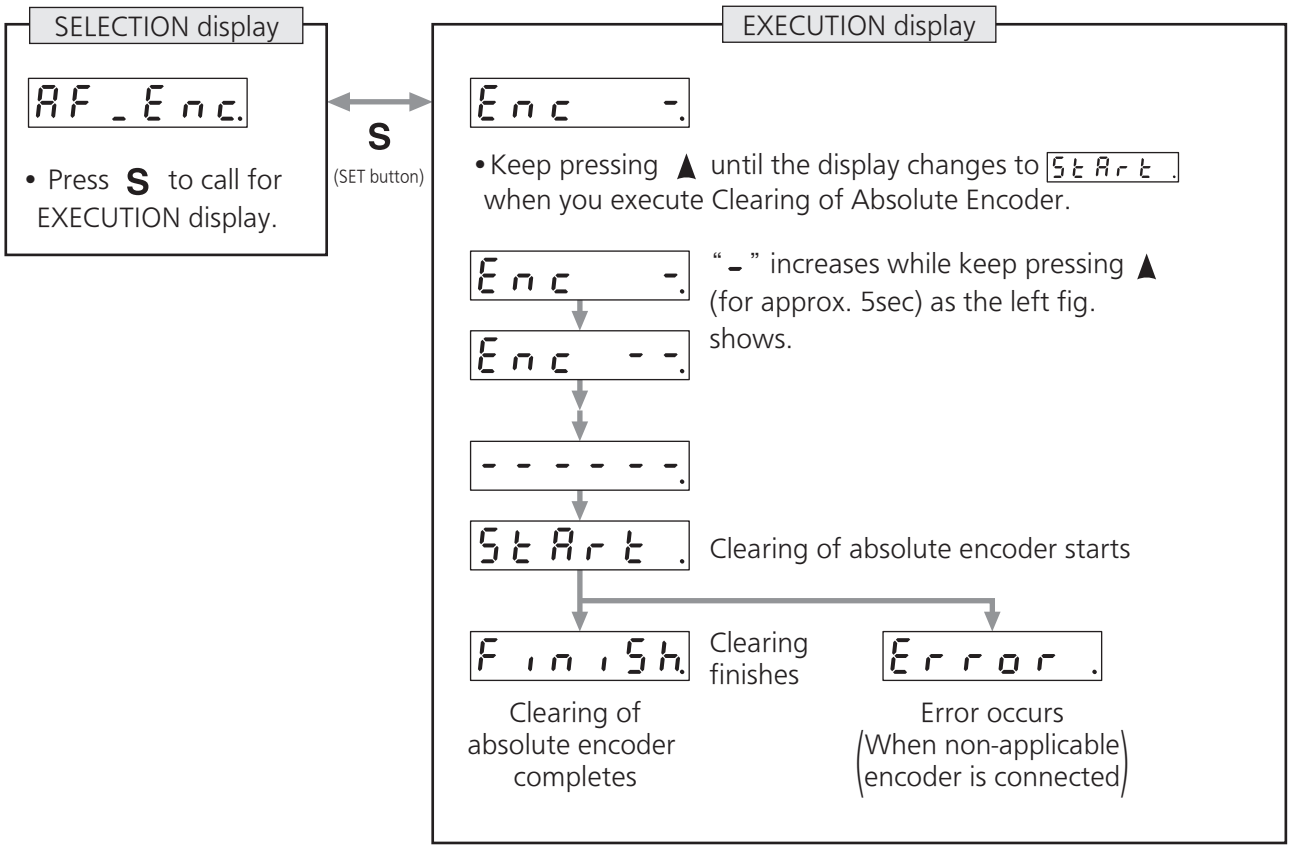

Note

- After clearing of absolute encoder finishes, return to SELECTION display, referring to structure of each mode (P.2-112).

(5) Initialization of parameter

Initialize the parameter.

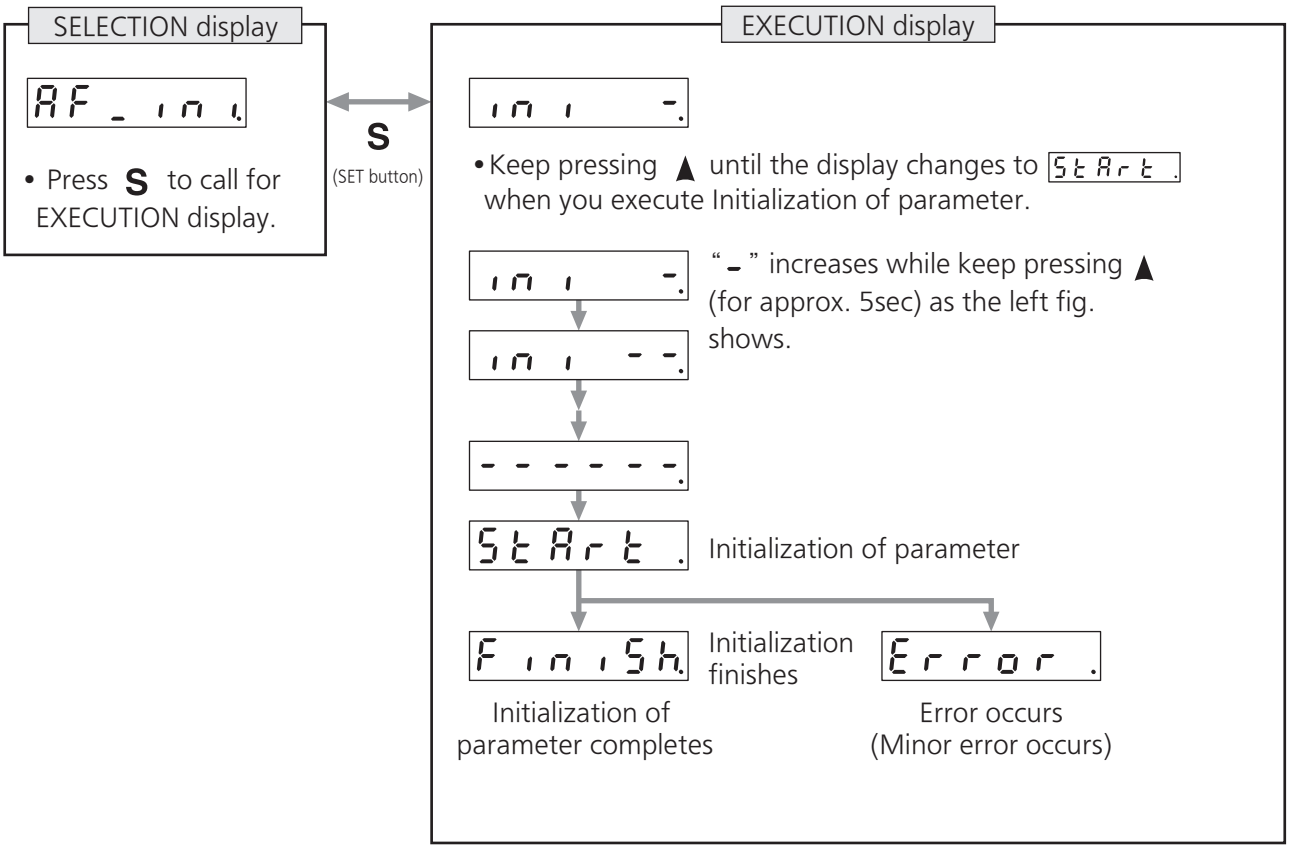

Caution

- Parameter cannot be initialized when one of the following error occurs: Err11.0 "Under voltage protection of control power supply" , EEPROM related errors (Err36.0, Err36.1, Err36.2, Err37.0, Err37.1 and Err37.2) - initialization will result in "Error" display.

Note

- After initialization of parameter finishes, return to SELECTION display, referring to structure of each mode (P.2-112).

(6) Release of front panel lock

Release the front panel lock setting.

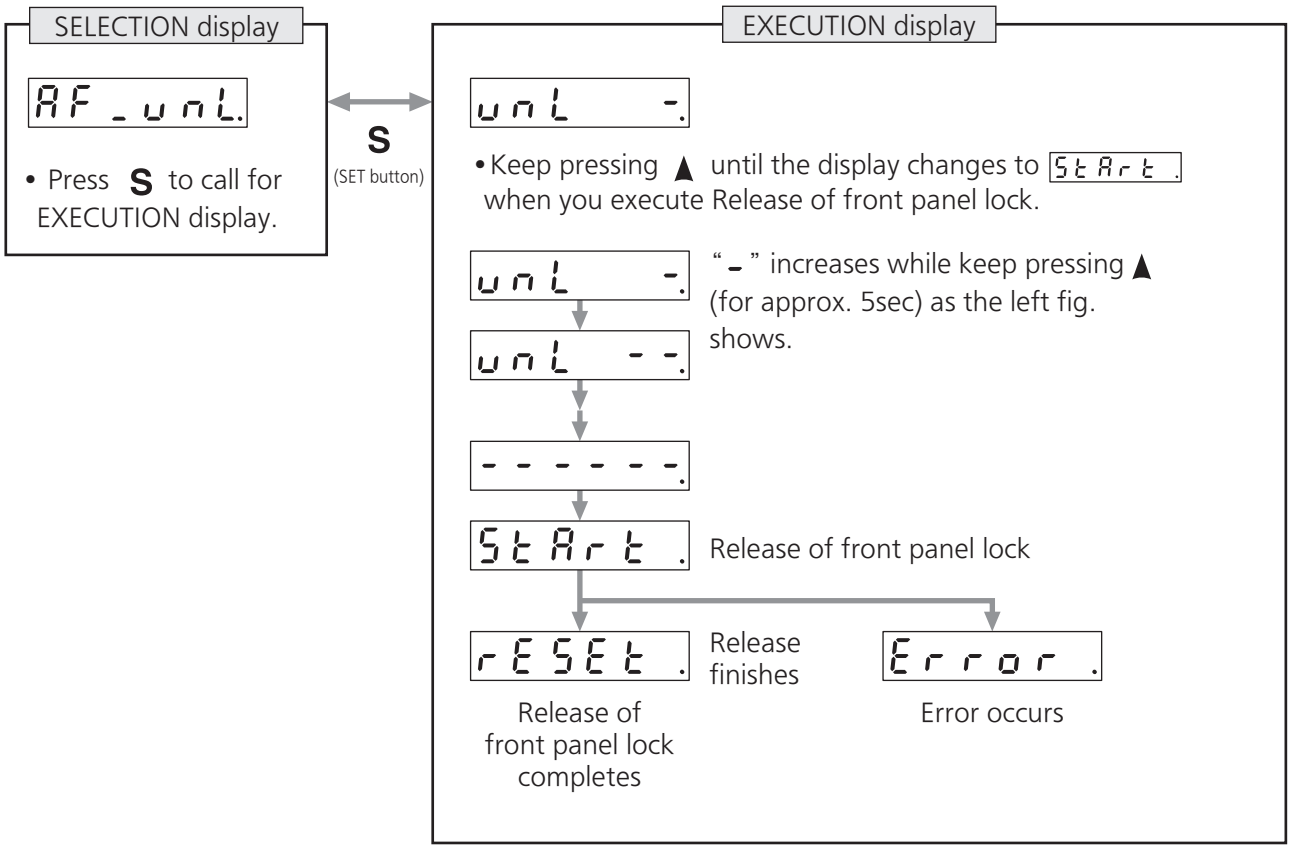

Note

- After release of front panel lock finishes, return to SELECTION display, referring to structure of each mode (P.2-112).

(7) Battery refresh

Battery refresh action is conducted.

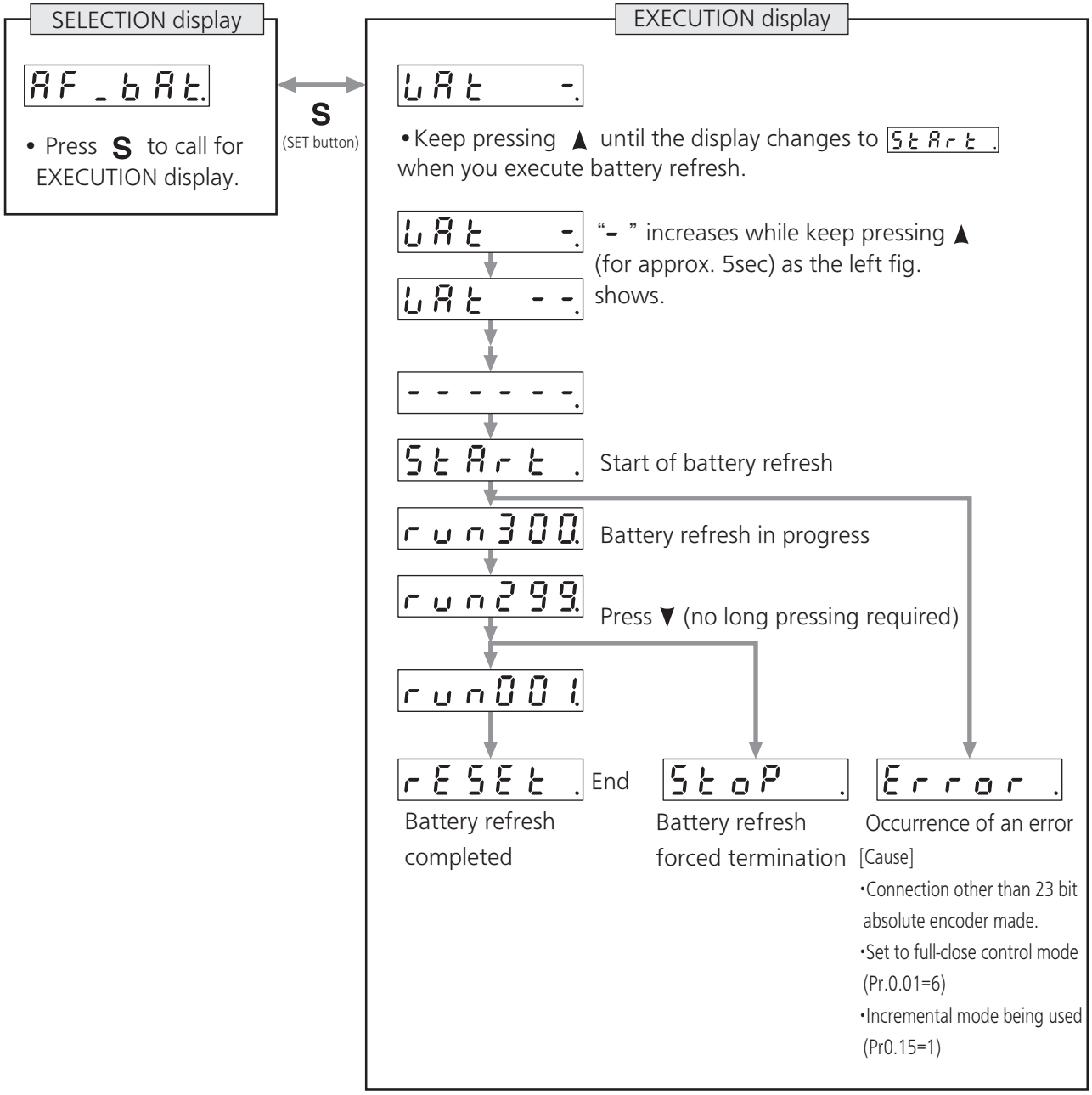

Note 1) When running Battely refresh, Battely alarm may occer in that case, please run the clear Battely alarm.

Note

- After release of front panel lock finishes, return to SELECTION display, referring to structure of each mode (P.2-112).

14. How to Use the Front Panel

Software version display button

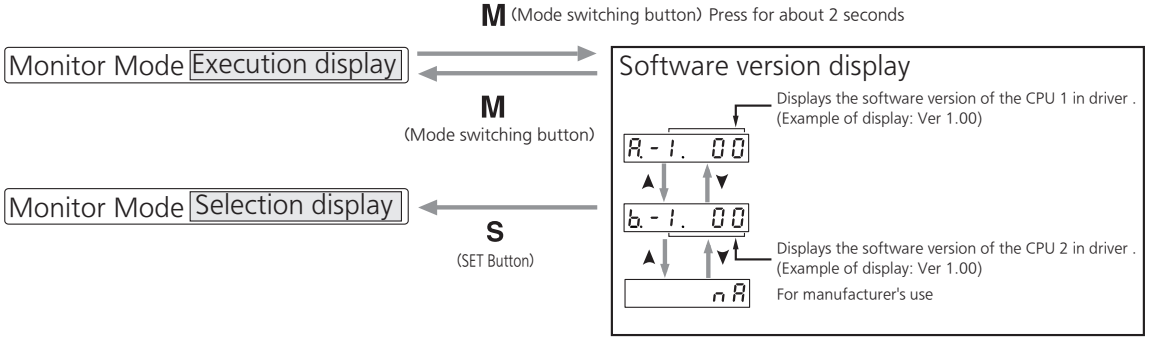

3. Connection

1. Outline of mode
Position Control Mode 3-2
Velocity Control Mode 3-6
Torque Control Mode 3-9
Full-closed Control Mode 3-12

2. Control Block Diagram
Position Control Mode (Two-degree-of-freedom control noneffective) .. 3-15
Position Control Mode (Two-degree-of-freedom control effective) 3-16
Velocity Control Mode (Two-degree-of-freedom control noneffective) .. 3-17
Velocity Control Mode (Two-degree-of-freedom control effective) 3-18
Torque Control Mode 3-19
Full-closed Control Mode (Two-degree-of-freedom control noneffective) 3-20
Full-closed Control Mode (Two-degree-of-freedom control effective) 3-21

3. Wiring Diagram to the connector, X4
Example of control mode specific wiring 3-22
Connecting Example to Host Controller 3-24

4. Inputs and outputs on connector X4
Interface Circuit (Input) 3-34
Interface Circuit (Output) 3-36
Input Signal and Pin No. 3-38
Output Signal and Pin No. 3-49

5. IF Monitor Settings
How to Assign Various I/O Functions to the I/F 3-55

1. Outline of mode

Position Control Mode

SE	SG	SF
○	○	○

Outline

You can perform position control based on the positional command (pulse train) from the host controller.
This section describes the fundamental setup to be used for the position control.

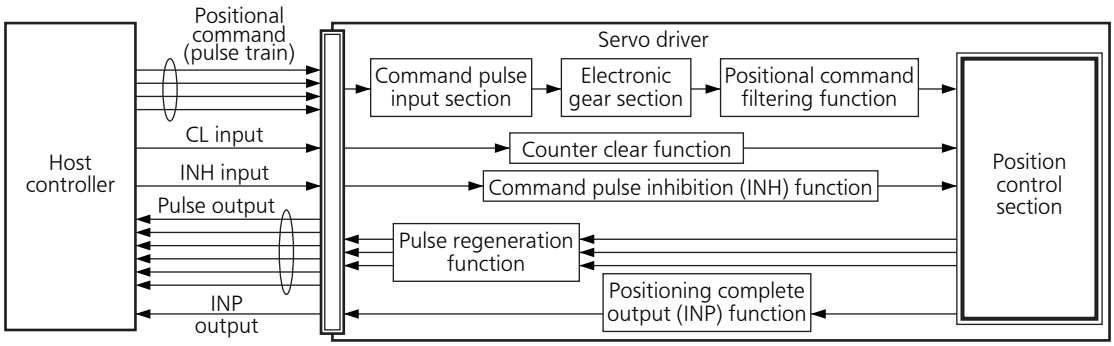

Caution With the switching of control mode, positional deviation counter clear, command pulse input inhibition, command division/multiplication function, positional command filter, vibration control clear may lose original location information.
When the positional management action is restarted, it is supposed to return to the origin.

Function

(1) Process of command pulse input

The positional commands of the following 3 types (pulse train) are available.

- 2-phase pulse
- Positive direction pulse/negative direction pulse
- Pulse train + sign

Set the pulse configuration and pulse counting method based on the specification and configuration of installation of the host controller.
The input terminals can accommodate the following 2 systems.

- Input 1 “PULSH1, PULSH2, SIGNH1, SIGNH2” line receiver input (8 Mpulse/s)
- Input 2 “PULS1, PULS2, SIGN1, SIGN2” photocoupler input (500 kpulse/s)

Caution For line driver output, “Input 2” can also be used without changing the allowable input frequency.

- Relevant parameters

Parameter No.	Title	Range	Function
Pr0.05	Selection of command pulse input	0 to 2	You can select either the photocoupler input or the exclusive input for line driver as the command pulse input. 0: Photocoupler input (PULS1, PULS2, SIGN1, SIGN2) 1: Exclusive input for line driver (PULSH1, PULSH2, SIGNH1, SIGNH2) 2: Photocoupler input (PULS1, PULS2, SIGN1, SIGN2) [200 kpulse/s or less]
Pr0.06	Command pulse rotational direction setup	0 to 1	Sets the counting direction when command pulse is input.
Pr0.07	Command pulse input mode setup	0 to 3	Sets the counting method when command pulse is input.

Note For details of these parameters, refer to P.4-10 to P.4-11 “Details of parameter” .

Related page
- P.3-15 and 16 “Control Block Diagram”
- P.3-22 “Wiring Diagram to the connector, X4”

(2) Electronic gear function

This function multiplies the input pulse command from the host controller by the predetermined dividing or multiplying factor and applies the result to the position control section as the positional command. By using this function, desired motor rotations or movement distance per unit input command pulse can be set; or the command pulse frequency can be increased if the desired motor speed cannot be obtained due to limited pulse output capacity of the host controller.

- Relevant parameters

Parameter No.	Title	Range	Function
Pr0.08	Command pulse counts per one motor revolution	0 to 8388608	Set the command pulses that causes single turn of the motor shaft.
Pr0.09	1st numerator of electronic gear	0 to 1073741824	Set the numerator of division/multiplication operation made according to the command pulse input.
Pr0.10	Denominator of electronic gear	1 to 1073741824	Set the Denominator of division/multiplication operation made according to the command pulse input.

Note

For details of these parameters, refer to P.4-12 “Details of parameter”

(3) Positional command filtering function

To make the positional command divided or multiplied by the electronic gear smooth, set the command filter.

- Relevant parameters

Parameter No.	Title	Range	Unit	Function
Pr2.22	Positional command smoothing filter	0 to 10000	0.1 ms	Set up the time constant of the 1st delay filter in response to the positional command.
Pr2.23	Positional command FIR filter	0 to 10000	0.1 ms	Set up the time constant of the 1st delay filter in response to the positional command.

Note

For details of these parameters, refer to P.4-28 to P.4-29 “Details of parameter”

(4) Pulse regeneration function

The information on the amount of movement can be sent to the host controller in the form of A- and B-phase pulses from the servo driver. When the output source is the encoder, Z-phase signal is output once per motor revolution; or if the feedback scale, the signal is output at absolute zero position. The output resolution, B-phase logic and output source (encoder or external scale) can be set with parameters.

- Relevant parameters

Parameter No.	Title	Range	Unit	Function
Pr0.11	Output pulse counts per one motor revolution	1 to 2097152	P/r	You can set up the output pulse counts per one motor revolution for each OA and OB with the Pr0.11 setup.
Pr0.12	Reversal of pulse output logic	0 to 3	—	You can set up the B-phase logic and the output source of the pulse output. With this parameter, you can reverse the phase relation between the A-phase pulse and the B-phase pulse by reversing the B-phase logic.
Pr5.03	Denominator of pulse output division	0 to 8388608	—	For application where the number of pulses per revolution is not an integer, this parameter can be set to a value other than 0, and the dividing ratio can be set by setting numerator of division to Pr0.11 and denominator of division to Pr5.03.
Pr5.33	Pulse regenerative output limit setup	0 to 1	—	Enable/disable detection of Err28.0 Pulse regenerative limit protection.
Pr6.20	Z-phase setup of external scale	0 to 400	μs	Set up the Z phase regenerative width of feedback scale in unit of time.
Pr6.21	Serial absolute external scale Z phase setup	0 to 268435456	pulse	Full-closed control using serial absolute feedback scale. When outputting pulses by using the feedback scale as the source of the output, set the Z phase output interval in units of A phase output pulses of the feedback scale (before multiplied by 4).
Pr6.22	A, B phase external scale pulse output method selection	0 to 1	—	Select the pulse regeneration method of A, B and Z parallel feedback scale.

Note

For details of these parameters, refer to P.4-18,19,52,61,72-73 “Details of parameter”

(5) Deviation counter clear function

The deviation counter clear input (CL) clears the counts of positional deviation counter at the position control to 0.

- Relevant parameters

Parameter No.	Title	Range	Function
Pr5.17	Counter clear input mode	0 to 4	You can set up the clearing conditions of the counter clear input signal.

Note

For details of these parameters, refer to P.4-57 “Details of parameter”

(6) Positioning complete output (INP/INP2) function

The completion of positioning can be verified by the positioning complete output (INP/INP2). When the absolute value of the positional deviation counter at the position control is equal to or below the positioning complete range by the parameter, the output is ON. Presence and absence of positional command can be specified as one of judgment conditions.

• Relevant parameters

Parameter No.	Title	Range	Unit	Function
Pr4.31	Positioning complete (In-position) range	0 to 2097152	Command unit	Set up the timing of positional deviation at which the positioning complete signal (INP) is output.
Pr4.32	Positioning complete (In-position) output setup	0 to 10	—	Select the condition to output the positioning complete signal (INP).
Pr4.33	INP hold time	0 to 30000	1 ms	Set up the hold time when Pr4.32 Positioning complete output setup = 3.
Pr4.42	2nd Positioning complete (In-position) range	0 to 2097152	Command unit	Set up the timing of positional deviation at which the positioning complete signal (INP2) is output.

Note

For details of these parameters, refer to P.4-45,46,48 "Details of parameter"

(7) Command pulse inhibition (INH) function

The command pulse input counting process can be forcibly terminated by using the command pulse inhibit input signal (INH). When INH input is ON, the servo driver ignores the command pulse, disabling pulse counting function. At then, A large number of pulses of the positional command filter function and the command frequency mulitiplication function is cleared.

The default setting of this inhibition function is disable. To use INH function, change the setting of Pr5.18 "Invalidation of command pulse prohibition input" .

• Relevant parameters

Parameter No.	Title	Range	Function
Pr5.18	Invalidation of command pulse inhibit input	0 to 2	Set the command pulse input inhibition to valid or invalid. 0: valid (When INH is input, the command pulse input is inhibited, and the residual pulse of positional command filter and electronic gear is removed) 1: invalid 0: valid (When INH is input, the command pulse input is inhibited, and the residual pulse of positional command filter and electronic gear is retained)
Pr5.19	Command pulse inhibit input reading setup	0 to 5	Select command pulse inhibit input enable/disable signal reading period. When the status of several signals read during the predetermined reading period are same, update the signal status.

Note

For details of these parameters, refer to P.4-57 "Details of parameter"

When INH input is ON, the deviation will be caused between the positional command administrated by controller and internal positional command from the fliter that receives the positional command from servo drivers, and orginal location before being input INH positional command will be lost. Therefore, it is supposed to reset the orignial location when it needs to restart return to origin action.

1. Outline of mode

Velocity Control Mode

SE	SG	SF
○	○	○

Outline

You can control the speed according to the analog speed command from the host controller or the speed command set in the servo driver.

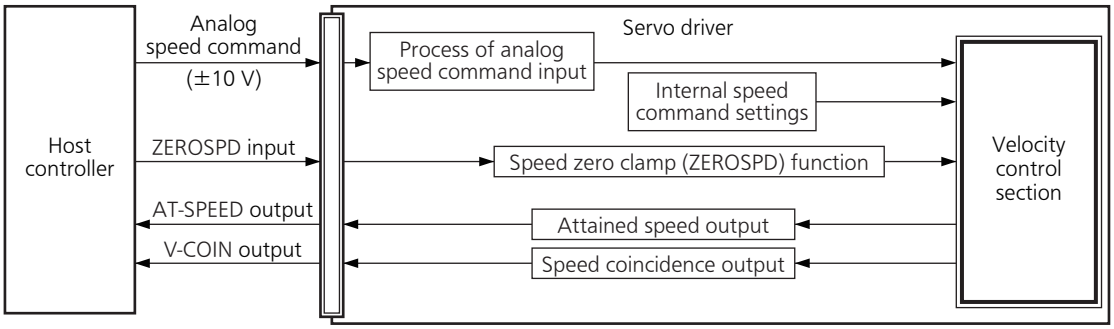

Note Only for position control type and communication type are not provided with analog input and V-COIN output.

Function

(1) Velocity control by analog speed command

The analog speed command input voltage is converted to equivalent digital speed command. You can set the filter to eliminate noise or adjust the offset.

- Relevant parameters

Parameter No.	Title	Range	Unit	Function
Pr3.00	Speed setup, Internal/ External switching	0 to 3	—	This driver is equipped with internal speed setup function so that you can control the speed with contact inputs only.
Pr3.01	Speed command rotational direction selection	0 to 1	—	Select the Positive/Negative direction specifying method.
Pr3.02	Input gain of speed command	10 to 2000	(r/min) /V	Based on the voltage applied to the analog speed command (SPR), set up the conversion gain to motor command speed.
Pr3.03	Reversal of speed command input	0 to 1	—	Specify the polarity of the voltage applied to the analog speed command (SPR).
Pr4.22	Analog input 1 (AI1) offset setup	−27888 to 27888	0.359 mV	Set up the offset correction value applied to the voltage fed to the analog input 1.
Pr4.23	Analog input 1 (AI1) filter	0 to 6400	0.01 ms	Set up the time constant of 1st delay filter that determines the lag time behind the voltage applied to the analog input 1.

Note For details of these parameters, refer to P.4-31,32,44 "Details of parameter"
Only for position control type and communication type are not provided with analog input.

Related page
- P.3-17 and 18 "Control Block Diagram"
- P.3-22 "Wiring Diagram to the connector, X4"

(2) Velocity control by internal speed command

You can control the speed by using the internal speed command set to the parameter. By using the internal speed command selections 1, 2, 3 (INTSPD1, 2, 3), you can select best appropriate one among up to 8 internal speed command settings. Default setting uses the analog speed command. To use the internal speed command, select it through Pr3.00 "Internal/external speed setup" .

- Relevant parameters

Parameter No.	Title	Range	Unit	Function
Pr3.00	Speed setup, Internal/ External switching	0 to 3	—	This driver is equipped with internal speed setup function so that you can control the speed with contact inputs only.
Pr3.01	Speed command rotational direction selection	0 to 1	—	Select the Positive/Negative direction specifying method.
Pr3.04	1st speed of speed setup	−20000 to 20000	r/min	Set up internal command speeds, 1st to 1st.
Pr3.05	2nd speed of speed setup			Set up internal command speeds, 1st to 2nd.
Pr3.06	3rd speed of speed setup			Set up internal command speeds, 1st to 3rd.
Pr3.07	4th speed of speed setup			Set up internal command speeds, 1st to 4th.
Pr3.08	5th speed of speed setup			Set up internal command speeds, 1st to 5th.
Pr3.09	6th speed of speed setup			Set up internal command speeds, 1st to 6th.
Pr3.10	7th speed of speed setup			Set up internal command speeds, 1st to 7th.
Pr3.11	8th speed of speed setup			Set up internal command speeds, 1st to 8th.

Note For details of these parameters, refer to P.4-31,P.4-33 "Details of parameter"

(3) Speed zero clamp (ZEROSPD) function

You can forcibly set the speed command to 0 by using the speed zero clamp input.

- Relevant parameters

Parameter No.	Title	Range	Unit	Function
Pr3.15	Speed zero-clamp function selection	0 to 3	—	You can set up the function of the speed zero clamp input.
Pr3.16	Speed zero clamp level	10 to 20000	r/min	Select the timing at which the position control is activated as the Pr3.15 Speed zero-clamp function selection is set to 2.

Note For details of these parameters, refer to P.4-34 "Details of parameter"

(4) Attained speed output (AT-SPEED)

The signal AT-SPEED is output as the motor reaches the speed set to Pr4.36 " Attained speed" .

- Relevant parameters

Parameter No.	Title	Range	Unit	Function
Pr4.36	At-speed (Speed arrival)	10 to 20000	r/min	Set the detection timing of the speed arrival output (AT-SPEED).

Note For details of these parameters, refer to P.4-47 "Details of parameter"

(5) Speed coincidence output (V-COIN)

This signal is output when the motor speed is equal to the speed specified by the speed command. The motor speed is judged to be coincident with the specified speed when the difference from the speed command before/after acceleration/deceleration is within the range specified by Pr4.35 "Speed coincident range" .

- Relevant parameters

Parameter No.	Title	Range	Unit	Function
Pr4.35	Speed coincidence range	10 to 20000	r/min	Set the speed coincidence (V-COIN) output detection timing.

Note For details of these parameters, refer to P.4-46 "Details of parameter"

(6) Speed command acceleration/deceleration setting function

This function controls the speed by adding acceleration or deceleration instruction in the driver to the input speed command.
Using this function, you can use the soft start when inputting stepwise speed command or when using internal speed setup. You can also use S shaped acceleration/deceleration function to minimize shock due to change in speed.

- Relevant parameters

Parameter No.	Title	Range	Unit	Function
Pr3.12	Acceleration time setup	0 to 10000	ms/ (1000 r/ min)	Set up acceleration processing time in response to the speed command input.
Pr3.13	Deceleration time setup	0 to 10000	ms/ (1000 r/ min)	Set up deceleration processing time in response to the speed command input.
Pr3.14	Sigmoid acceleration/ deceleration time setup	0 to 1000	ms	Set S-curve time for acceleration/ deceleration process when the speed command is applied.

Caution When the position loop is external to the driver, do not use the acceleration/deceleration time setting. Set these values to 0.

Note For details of these parameters, refer to P.4-33,P.4-34 "Details of parameter"

1. Outline of mode

Torque Control Mode

SE	SG	SF
		○

Outline

The torque control is performed according to the torque command specified in the form of analog voltage. For controlling the torque, the speed limit input is required in addition to the torque command to maintain the motor speed within the speed limit.

With the A5 series, 3 torque control modes are available, each requires different torque command and speed limit as shown in the table below.

- Pr3.17 (Selection of torque command)

Setup value		Torque command input	Velocity limit input
0	Selection of torque command 1	Analog input 1 *1 (AI1, 16-bit resolution)	Parameter value*2 (Pr3.21)
1	Selection of torque command 2	Analog input 2 (AI2, 12-bit resolution)	Analog input 1 (AI1, 16-bit resolution)
2	Selection of torque command 3	Analog input 1 *1 (AI1, 16-bit resolution)	Parameter value*2 (Pr3.21, Pr3.22)

*1 For Pr0.01 Control mode setup = 5 (velocity/torque control), the torque command input is the analog input 2 (AI2, 12-bit resolution).

*2 Since the ex-factory value is 0, when using the torque control mode, please set the appropriate value.

Note For details of these parameters, refer to P.4-36 “Details of parameter” .

<Selection of torque command 1, 3>

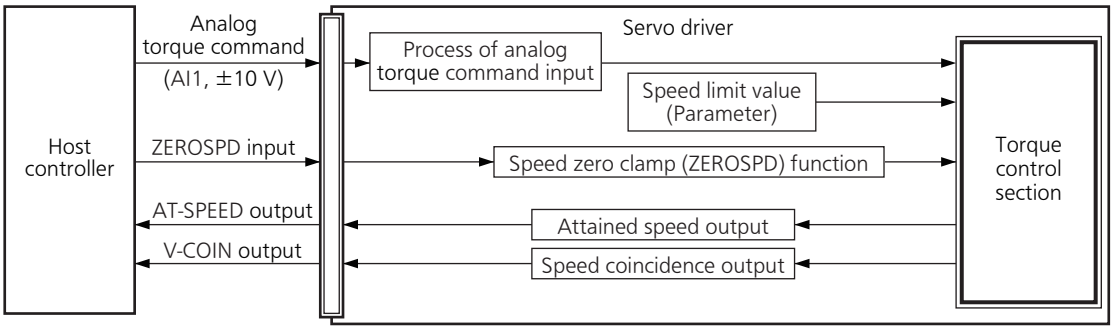

<Selection of torque command 2>

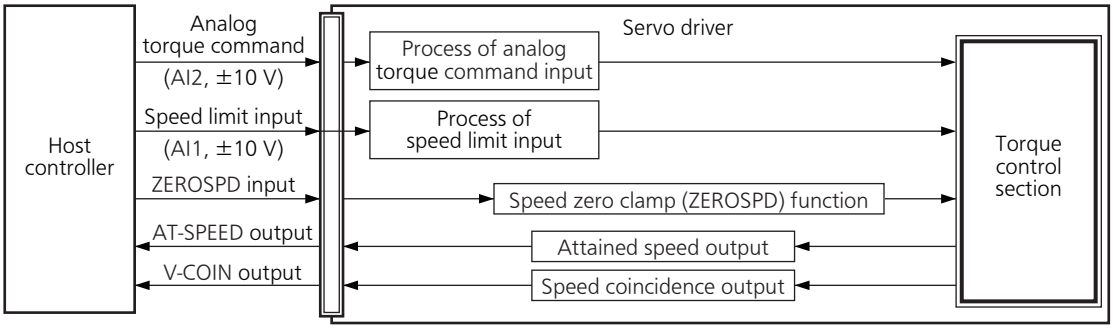

Note Only for position control type and communication type are not provided with analog input and V-COIN output.

Related page • P.3-19 “Control Block Diagram” • P.3-22 “Wiring Diagram to the connector, X4”

Function

(1) Process of analog torque command input

This process converts the analog torque command input (voltage) to the equivalent digital torque command having the same effect. You can set the filter or adjust the offset to eliminate noise.

- Relevant parameters <Selection of torque command 1,3>

Parameter No.	Title	Range	Unit	Function
Pr3.18	Torque command direction selection	0 to 1	—	Select the direction positive/negative direction of torque command.
Pr3.19	Input gain of torque command	10 to 100	0.1 V /100 %	Based on the voltage (V) applied to the analog torque command (TRQ R), set up the conversion gain to torque command (%).
Pr3.20	Input reversal of torque command	0 to 1	—	Set up the polarity of the voltage applied to the analog torque command (TRQR).
Pr4.22	Analog input 1 (AI1) offset setup	−27888 to 27888	0.359 mV	Set up the offset correction value applied to the voltage fed to the analog input 1.
Pr4.23	Analog input 1 (AI1) filter	0 to 6400	0.01 ms	Set up the time constant of 1st delay filter that determines the lag time behind the voltage applied to the analog input 1.

- Relevant parameters <Selection of torque command 2>

Parameter No.	Title	Range	Unit	Function
Pr3.18	Torque command direction selection	0 to 1	—	Select the direction positive/negative direction of torque command.
Pr3.19	Input gain of torque command	10 to 100	0.1 V /100 %	Based on the voltage (V) applied to the analog torque command (TRQ R), set up the conversion gain to torque command (%).
Pr3.20	Input reversal of torque command	0 to 1	—	Set up the polarity of the voltage applied to the analog torque command (TRQR).
Pr4.25	Analog input 2 (AI2) offset setup	−1707 to 1707	5.86 mV	Set up the offset correction value applied to the voltage fed to the analog input 2.
Pr4.26	Analog input 2 (AI2) filter	0 to 6400	0.01 ms	Set up the time constant of 1st delay filter that determines the lag time behind the voltage applied to the analog input 2.

Note

For details of these parameters, refer to P.4-35, P.4-44 “Details of parameter”

(2) Speed limit function

The speed limit is one of protective functions used during torque control.
This function regulates the motor speed so that it does not exceed the speed limit while the torque is controlled.

Caution

While the speed limit is used to control the motor, the torque command applied to the motor is not directly proportional to the analog torque command. Torque command should have the following result: the motor speed is equal to the speed limit.

Due to gravity and other external disturbances, the torque command from the controller output makes the motor reverse direction action, the speed limit is not valid. This action becomes the problem, want to stop the motor, speed need to be set to Pr5.13 (Over-speed level setting) or Pr6.15 (Over-speed level setting) by Err26.0 (Overspeed protection) or Err26.1 (second overspeed protection) will stop the motor.

- Relevant parameters <Selection of torque command 1, 3>

Parameter No.	Title	Range	Unit	Function
Pr3.21	Speed limit value 1	0 to 20000	r/min	Set up the speed limit used for torque controlling.
Pr3.22	Speed limit value 2	0 to 20000	r/min	
Pr3.15	Speed zero-clamp function selection	0 to 3	—	You can set up the function of the speed zero clamp input.

- Relevant parameters <Selection of torque command 2>

Parameter No.	Title	Range	Unit	Function
Pr3.02	Input gain of speed command	10 to 2000	(r/min) /V	Based on the voltage applied to the analog speed command (SPR), set up the conversion gain to motor command speed.
Pr4.22	Analog input 1 (AI1) offset setup	−27888 to 27888	0.359 mV	Set up the offset correction value applied to the voltage fed to the analog input 1.
Pr4.23	Analog input 1 (AI1) filter	0 to 6400	0.01 ms	Set up the time constant of 1st delay filter that determines the lag time behind the voltage applied to the analog input 1.
Pr3.15	Speed zero-clamp function selection	0 to 3	—	You can set up the function of the speed zero clamp input.

Note

For details of these parameters, refer to P.4-32, 34, 36, 44 “Details of parameter”

1. Outline of mode

Full-closed Control Mode

SE	SG	SF
		○

Outline

In this full-closed control, you can make a position control by using a external scale mounted externally which detects the position directly and feeds it back. With this control, you can control without being affected by the positional variation due to the ball screw error or temperature and you can expect to achieve a very high precision positioning in sub-micron order.

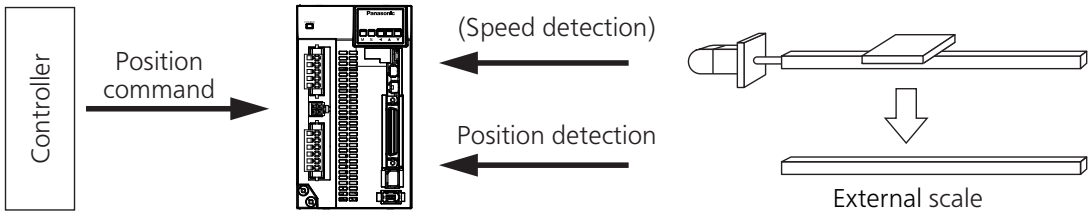

We recommend the external scale division ratio of $\frac{1}{40} \leqslant$ External scale division ratio $\leqslant 1280$

Cautions on Full-Closed Control

(1) Enter the command pulses making the external scale as a reference.
If the command pulses do not match to the external scale pulses, use the command division/multiplication function (Pr0.09 to Pr0.10) and setup so that the command pulses after division/multiplication is based on the external scale reference.

(2) The A5 series supports the external scale of A- and B-phase output type and serial communication type. Initialize the parameters according to the following procedures and write to EEPROM and turn on power.

(3) When using a scale of A- and B-phase output type, correctly connect it so that the rotating direction of the motor (CW/CCW) and A-phase and B-phase of the external scale have the following relationship.

Pr3.26	CCW direction	CW direction
0: Non-reversal	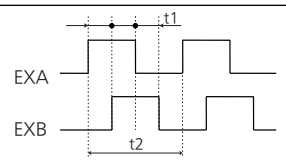 EXB is 90° slower than EXA t1 > 0.25 μs t2 > 1.0 μs	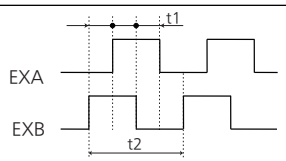 EXB is 90° faster than EXA t1 > 0.25 μs t2 > 1.0 μs
1: Reversal	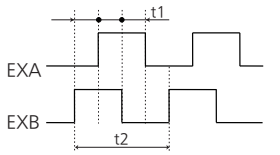 EXB is 90° f aster than EXA t1 > 0.25 μs t2 > 1.0 μs	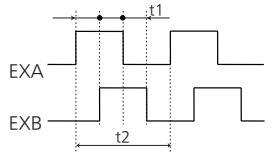 EXB is 90° slower than EXA t1 > 0.25 μs t2 > 1.0 μs

※ 4 Mpulse/s is to comply with the time limit of input frequency. When using the A/B phase external scale which output is more than 4 Mpulse/s, please contact our company.

Related page
- P.3-20 and 21 "Control Block Diagram"
- P.3-22 "Wiring Diagram to the connector, X4"
- P.3-36 "Inputs and outputs on connector X4"
- P.4-37 "Details of parameter"

<How to make an initial setup of parameters related to external scale >

1) Turn on the power after checking the wiring.
2) Check the values (initial) feedback pulse sum and external scale feedback pulse sum with the front panel.
3) Move the work and check the travel from the initial values of the above 2).
4) If the travel of the feedback pulse sum and the external scale feedback pulse sum are reversed in positive and negative, set up the reversal of external scale direction (Pr3.26) to 1.
5) Set up the external scale division ratio Pr3.24/Pr3.25 based on the design values.

$$\text{External scale division ratio} = \frac{\text{Encoder resolution per motor revolution [pulse]}}{\text{External scale' s resolution per motor revolution [pulse]}} = \frac{\text{Pr3.24}}{\text{Pr3.25}}$$

If a wrong scale is applied, difference between the position calculated by using encoder feedback pulses and the position calculated by using external scale pulses as moving distance increases: larger difference will cause excessive deviation error protect.

6) Set up appropriate value of hybrid deviation excess (Pr3.28) in command unit, in order to avoid the damage to the machine.
   * A6-series driver calculates the difference between the encoder position and the external scale position as hybrid deviation, and is used to prevent the machine runaway or damage in case of the external scale breakdown or when the motor and the load is disconnected.
     If the hybrid deviation excess range is too wide, detection of the breakdown or the disconnection will be delayed and error detection effect will be lost. If this is too narrow, it may detect the normal distortion between the motor and the machine under normal operation as an error.
   * When the external scale division ration is not correct, hybrid deviation excess error (Err25.0) may occur especially when the work travels long distance, even though the external scale and the motor position matches.
     In this case, widen the hybrid deviation excess range by matching the external scale division ratio to the closest value.
   * With the switching of control mode, positional deviation counter clear, command pulse input inhibition, command division/multiplication function, positional command filter, vibration control clear may lose original location information.
     When the positional management action is restarted, it is supposed to return to the origin.

Function

(1) Selection of external scale type

Select the type of external scale to be used.

- Relevant parameters

Parameter No.	Title	Range	Function
Pr3.23	External scale selection	0 to 6	Select the type of external scale.
Pr3.26	Reversal of direction of external scale	0 to 3	Reverse the direction of external scale, feedback counter.

Note For details of these parameters, refer to P.4-36 ,P.4-37 “Details of parameter”

(2) Setup of external scale division ratio

Set up the division ratio of encoder resolution and external scale resolution.

- Relevant parameters

Parameter No.	Title	Range	Function
Pr3.24	Numerator of external scale division	0 to 2^{23}	Set up the numerator of the external scale dividing setup.
Pr3.25	Denominator of external scale division	1 to 2^{23}	Set up the Denominator of the external scale dividing setup.

For details of these parameters, refer to P.4-37 "Details of parameter"

(3) Setup of hybrid excessive deviation

This function detects the positional difference between the motor (encoder) and load (external scale) and enables the hybrid excessive deviation protection if the difference exceeds Pr3.28 "Hybrid excessive deviation setup" .
Hybrid excessive deviation is mainly caused by feedback scale error, wrong connection and loose connection between the motor and load.

- Relevant parameters

Parameter No.	Title	Range	Function
Pr3.28	Hybrid deviation excess setup	1 to 2^{27}	You can setup the permissible gap (hybrid deviation) between the present motor position and the present external scale position.
Pr3.29	Hybrid deviation clear setup	0 to 100	As the motor turns the number of revolutions set by this parameter, the hybrid deviation is cleared to 0.

Note

For details of these parameters, refer to P.4-37, P.4-38 "Details of parameter"

2. Control Block Diagram

Position Control Mode (Two-degree-of-freedom control noneffective)

SE	SG	SF
○	○	○

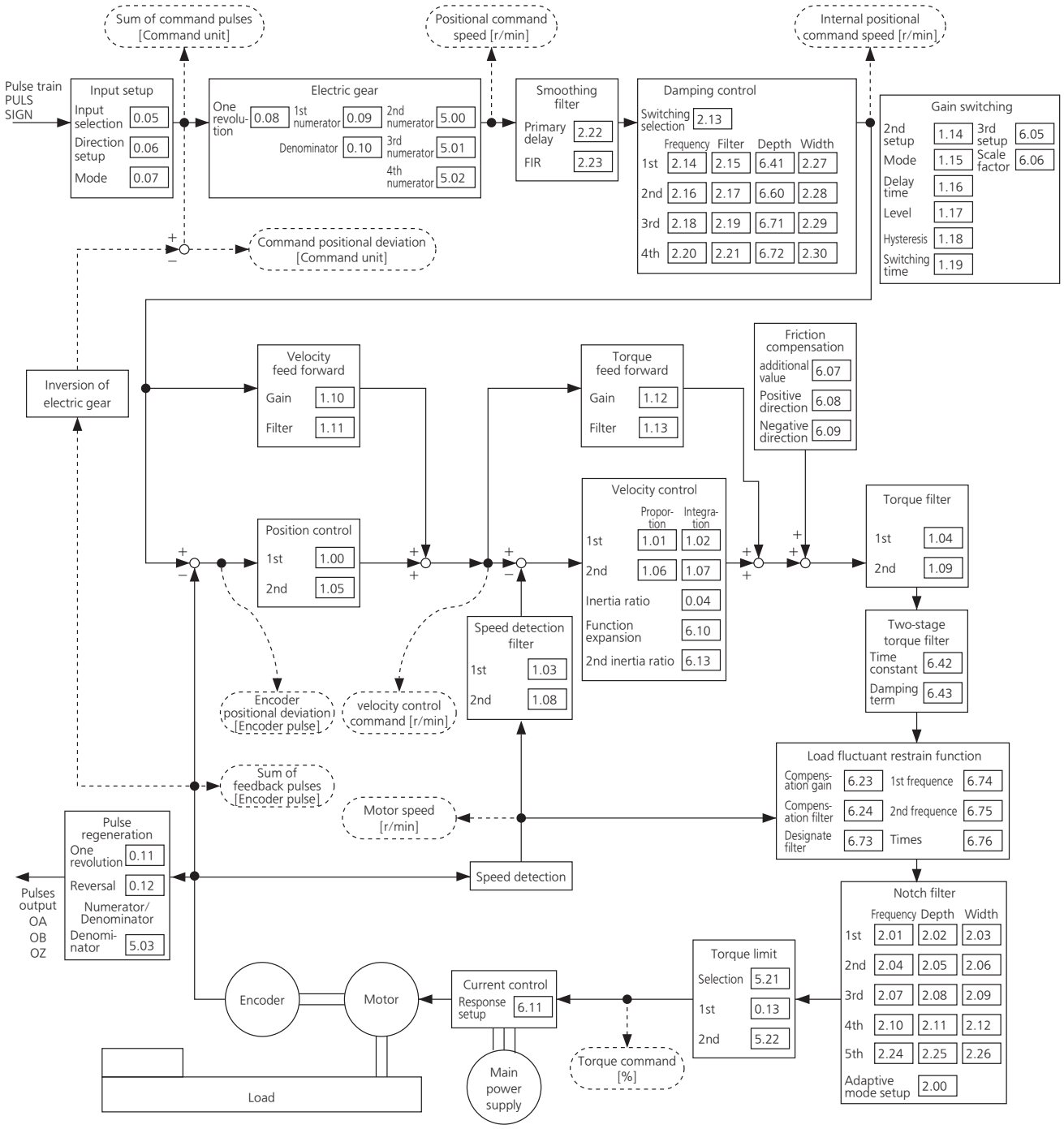

Related page
- P.3-22 "Wiring example of position control mode"
- P.3-24 "Connecting example to host controller"
- P.3-34 "Inputs and outputs on connector X4"
- P.4-2 "List of Parameters"

2. Control Block Diagram

Position Control Mode (Two-degree-of-freedom control effective)

SE	SG	SF
○	○	○

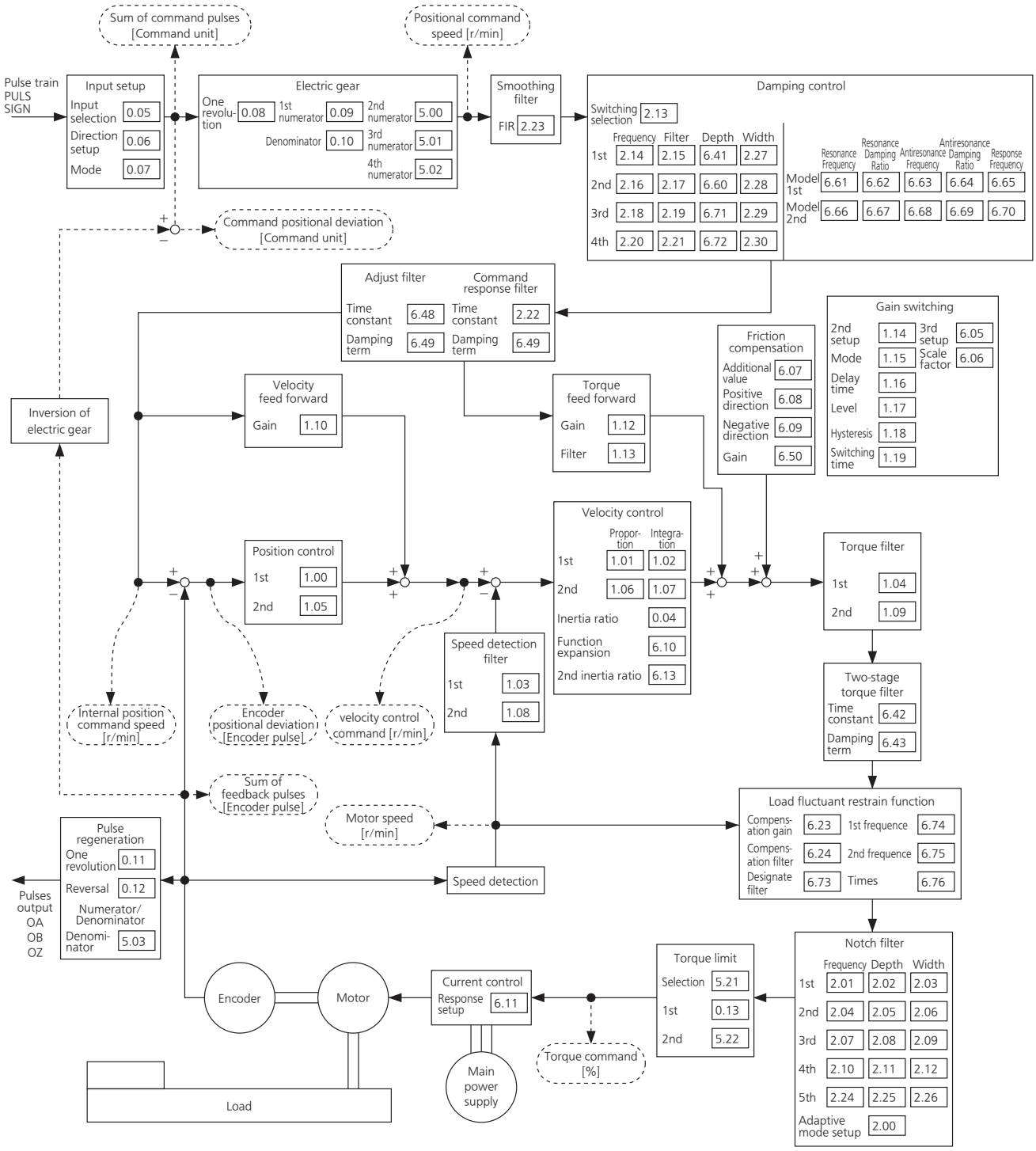

Related page
- P.3-22 "Wiring example of position control mode"
- P.3-24 "Connecting example to host controller"
- P.3-34 "Inputs and outputs on connector X4"
- P.4-2 "List of Parameters"

2. Control Block Diagram

Velocity Control Mode (2DOF control noneffective)

	SE	SG	SF		SE	SG	SF
Internal speed command	○	○	○	Analog input			○

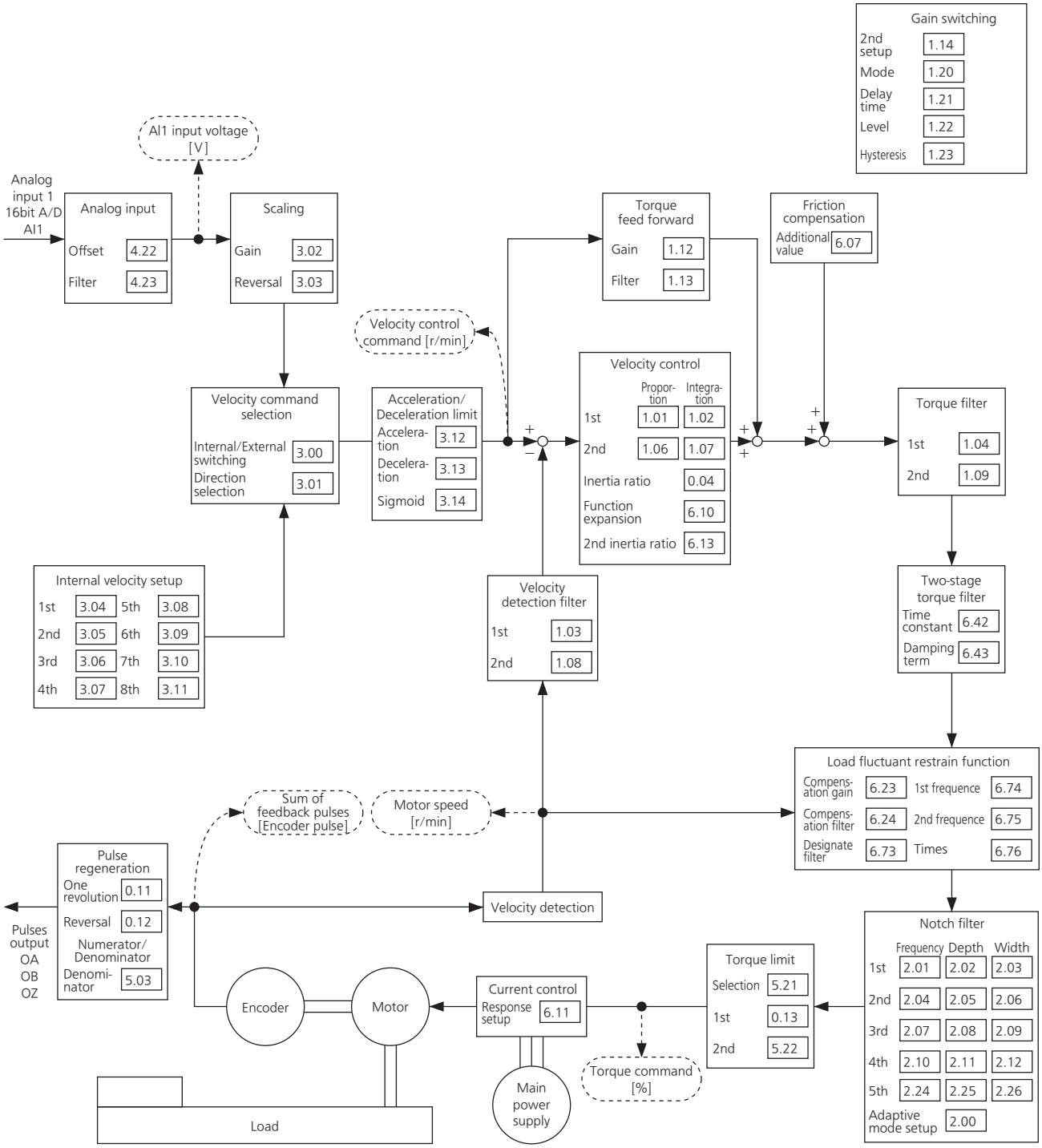

Related page

- P.3-22 "Wiring example of velocity control mode"
- P.3-24 "Connecting example to host controller"
- P.3-34 "Inputs and outputs on connector X4"
- P.4-2 "List of Parameters"

2. Control Block Diagram

Velocity Control Mode (2DOF control effective)

Internal speed command	SE	SG	SF	Analog input	SE	SG	SF
	○	○	○				○

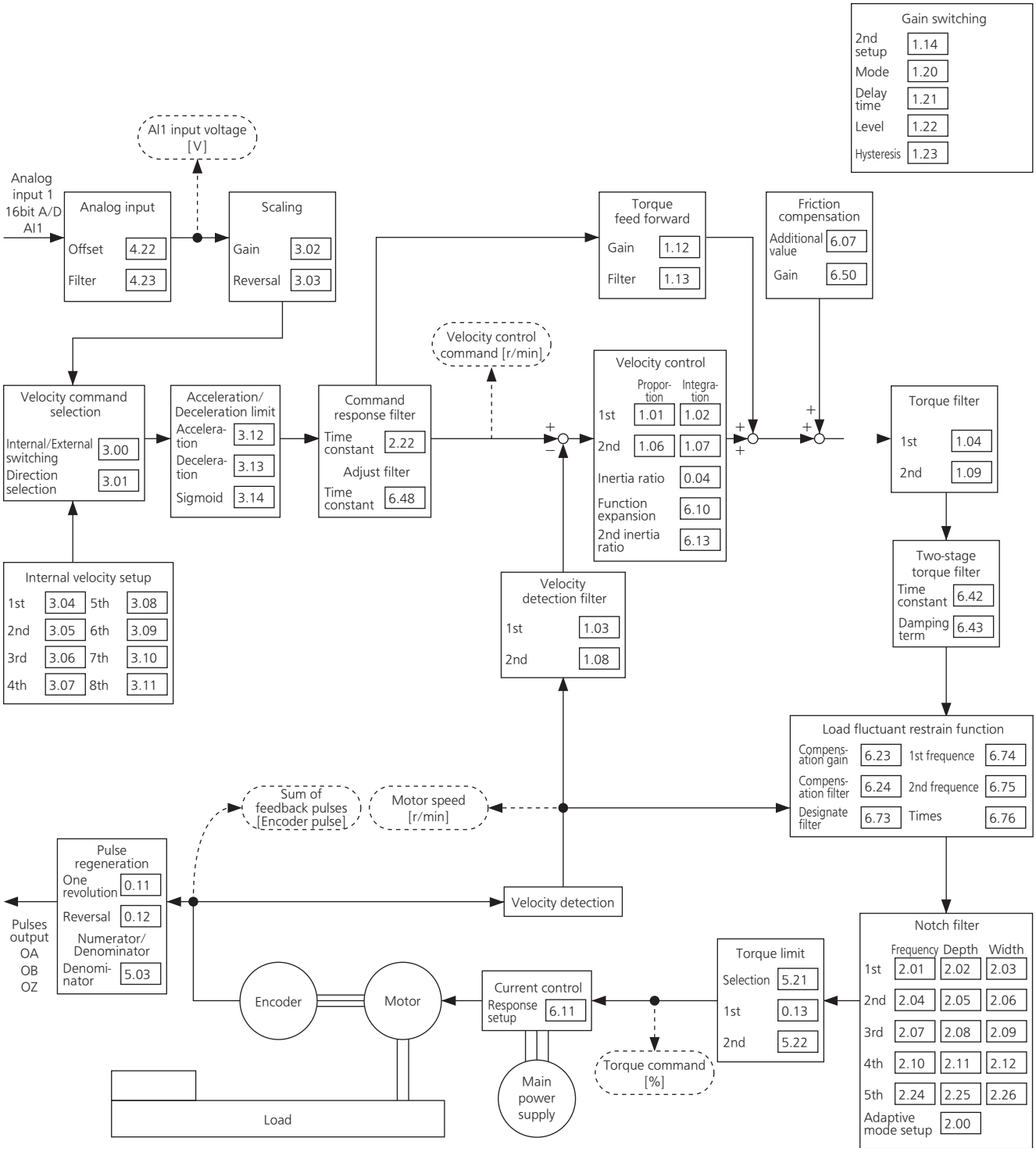

Related page
- P.3-22 "Wiring example of velocity control mode"
- P.3-24 "Connecting example to host controller"
- P.3-34 "Inputs and outputs on connector X4"
- P.4-2 "List of Parameters"

2. Control Block Diagram

Torque Control Mode

SE	SG	SF
		○

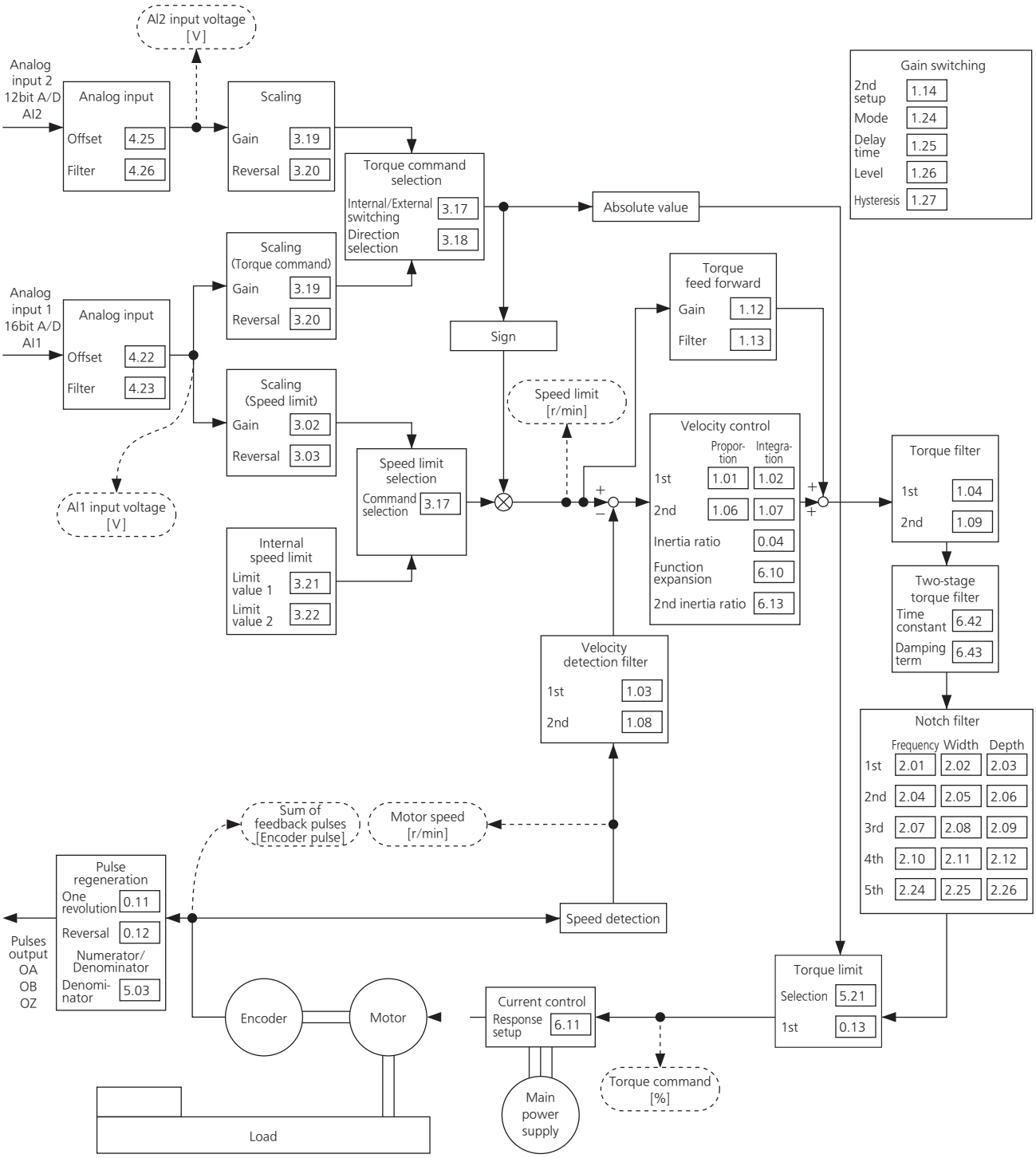

Related page

- P.3-23 "Wiring example of torque control mode"
- P.3-24 "Connecting example to host controller"
- P.3-34 "Inputs and outputs on connector X4"
- P.4-2 "List of Parameters"

2. Control Block Diagram

Full-closed Control Mode (Two-degree-of-freedom control noneffective)

SE	SG	SF
		○

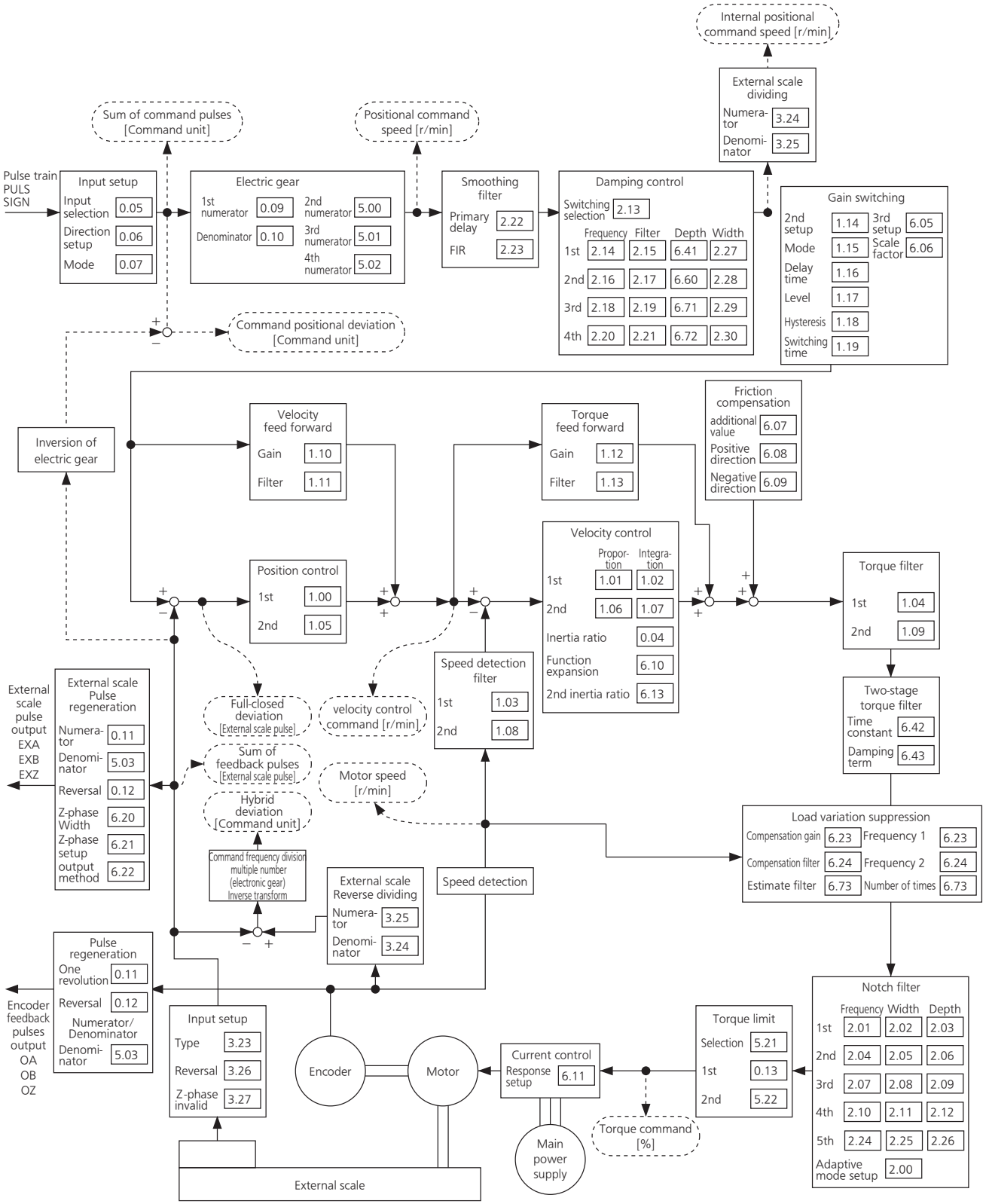

Related page
- P.3-23 "Wiring example of full-closed control mode"
- P.3-24 "Connecting example to host controller"
- P.3-34 "Inputs and outputs on connector X4"
- P.4-2 "List of Parameters"

2. Control Block Diagram

Full-closed Control Mode (Two-degree-of-freedom control effective)

SE	SG	SF
		○

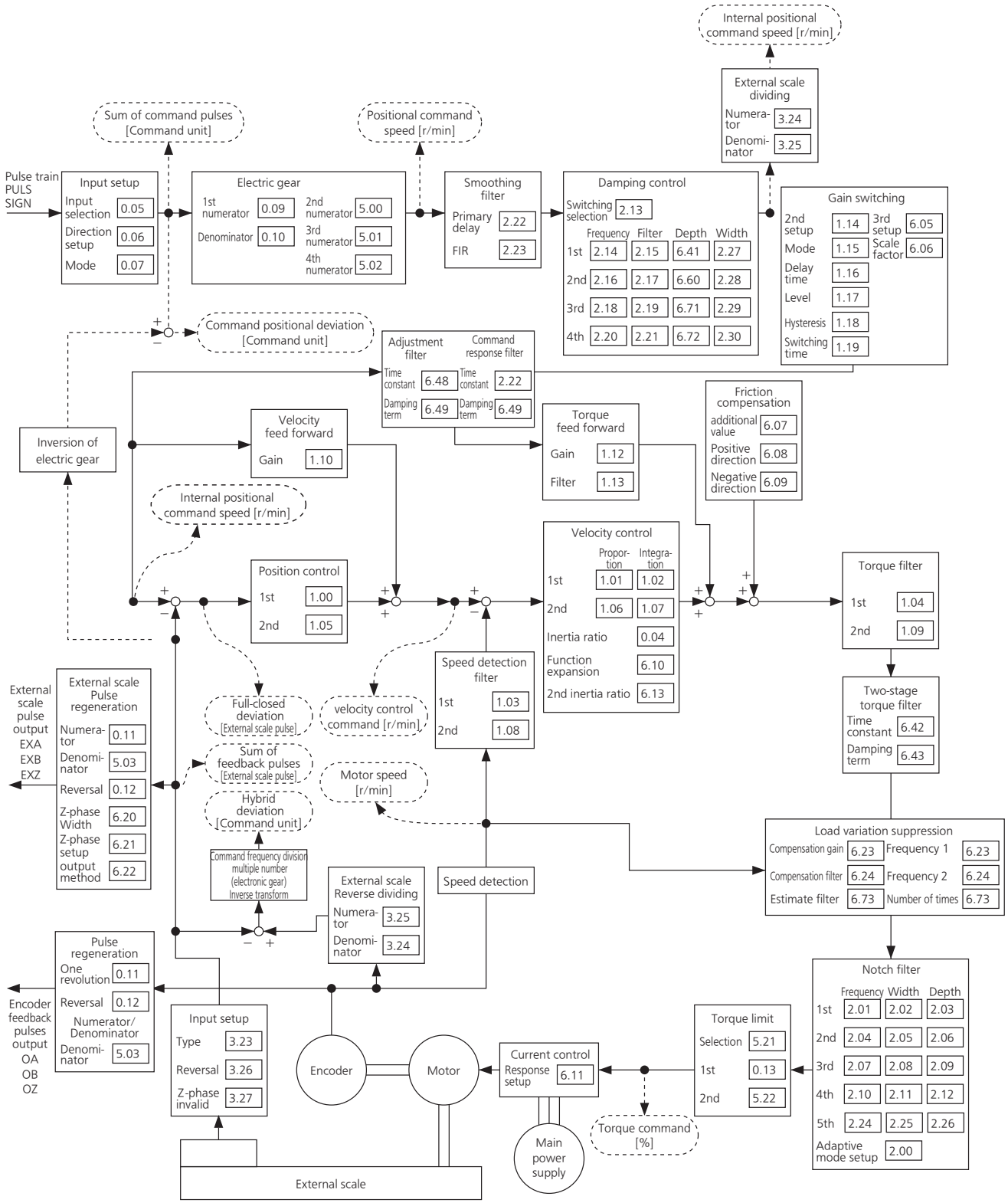

Related page
- P.3-23 "Wiring example of full-closed control mode"
- P.3-24 "Connecting example to host controller"
- P.3-34 "Inputs and outputs on connector X4"
- P.4-2 "List of Parameters"

3. Wiring Diagram to the connector, X4

Example of control mode specific wiring

Wiring Example of Position Control Mode

SE	SG	SF
○	○	○

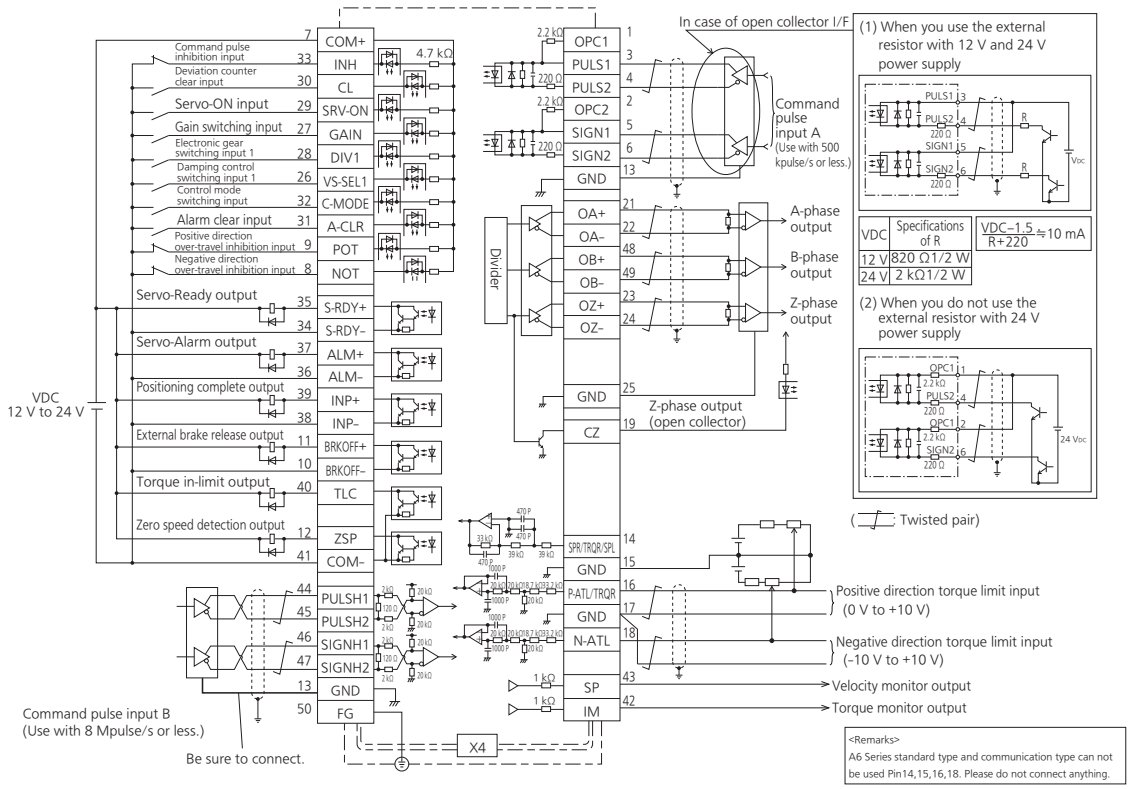

Wiring Example of Velocity Control Mode

SE	SG	SF
○	○	○

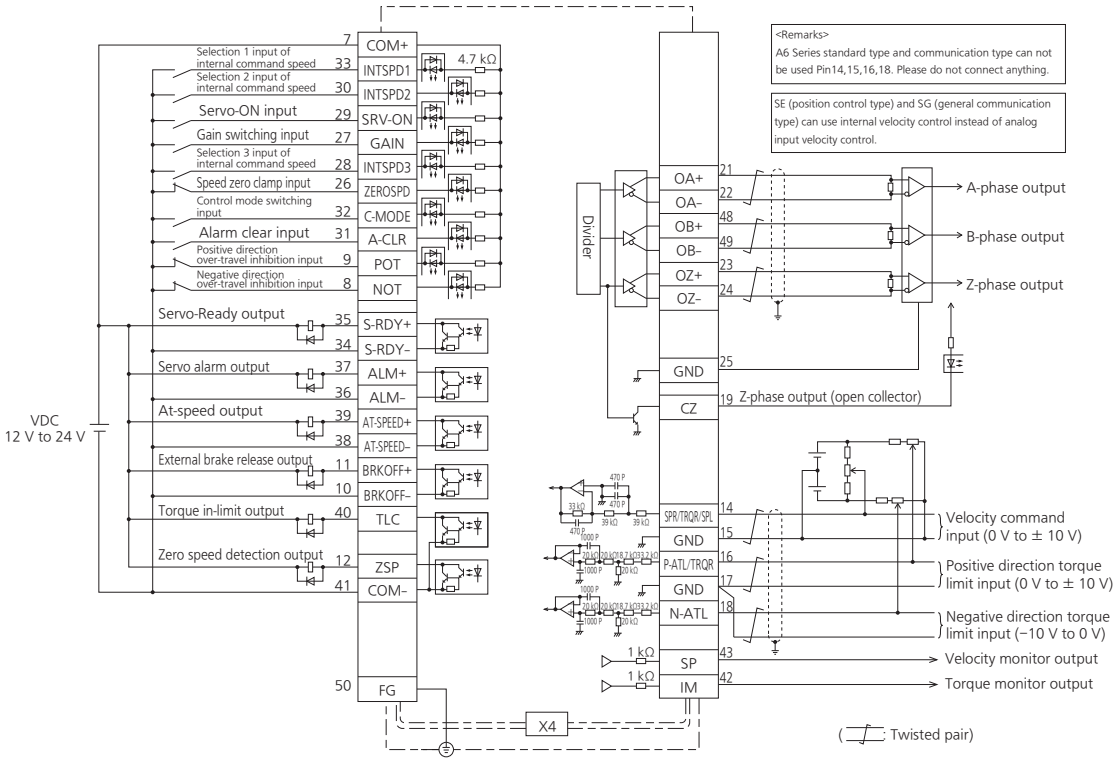

Note

- The functions of the following pin can be changed using parameters. (Refer to P.4-39)
  Input(Position): 8, 9, 26, 27, 28, 29, 31, 32 Output: 10-11, 12, 34-35, 36-37, 38-39, 40
  Input(Velocity): 8, 9, 26, 27, 28, 29, 30, 31, 32, 33 Output: 10-11, 12, 34-35, 36-37, 38-39, 40
  * Pins in the figure above represent default parameter values.

Caution

- With the position control type and communication type do not connect analog input on pins 14, 16 and 18 to SG of pin 15.

Wiring Example of Torque Control Mode

SE	SG	SF
		○

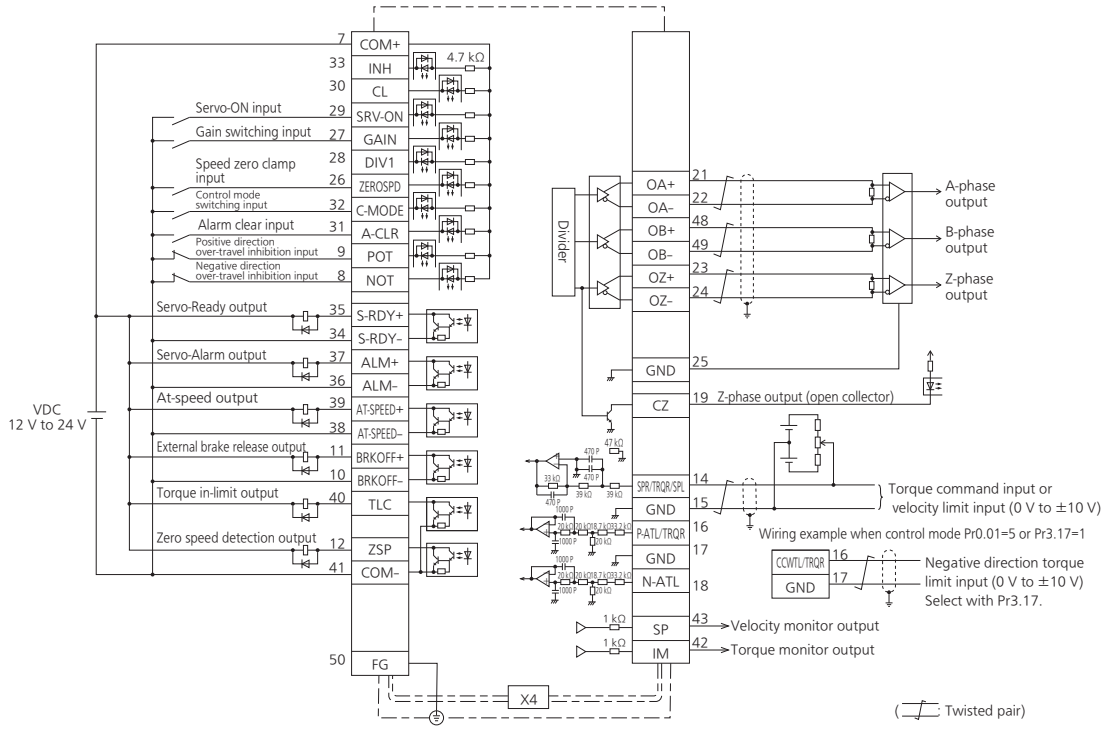

Wiring Example of Full-closed Control Mode

SE	SG	SF
		○

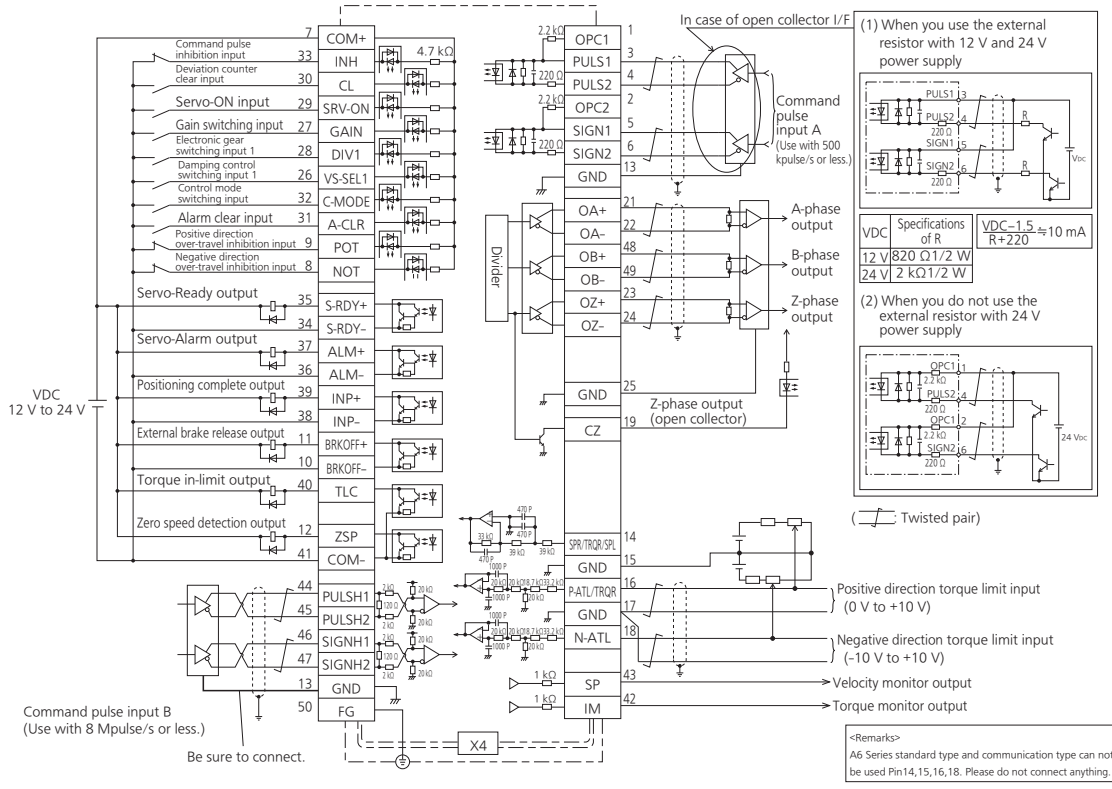

Note

- The functions of the following pin can be changed using parameters. (Refer to P.4-39)
  Input(Torque): 8, 9, 26, 27, 28, 29, 30, 31, 32, 33 Output: 10-11, 12, 34-35, 36-37, 38-39, 40
  Input(Full-closed): 8, 9, 26, 27, 28, 29, 31, 32 Output: 10-11, 12, 34-35, 36-37, 38-39, 40
  * Pins in the figure above represent default parameter values.

Caution

- With the position control type and communication type do not connect analog input on pins 14, 16 and 18 to SG of pin 15.

3. Wiring Diagram to the connector, X4

Connecting Example to Host Controller

Connection between MINAS A6 and FP7-AFP7PP02T/L(2-axes) AFP7PP04T/L(4-axes) Panasonic devices SUNX.

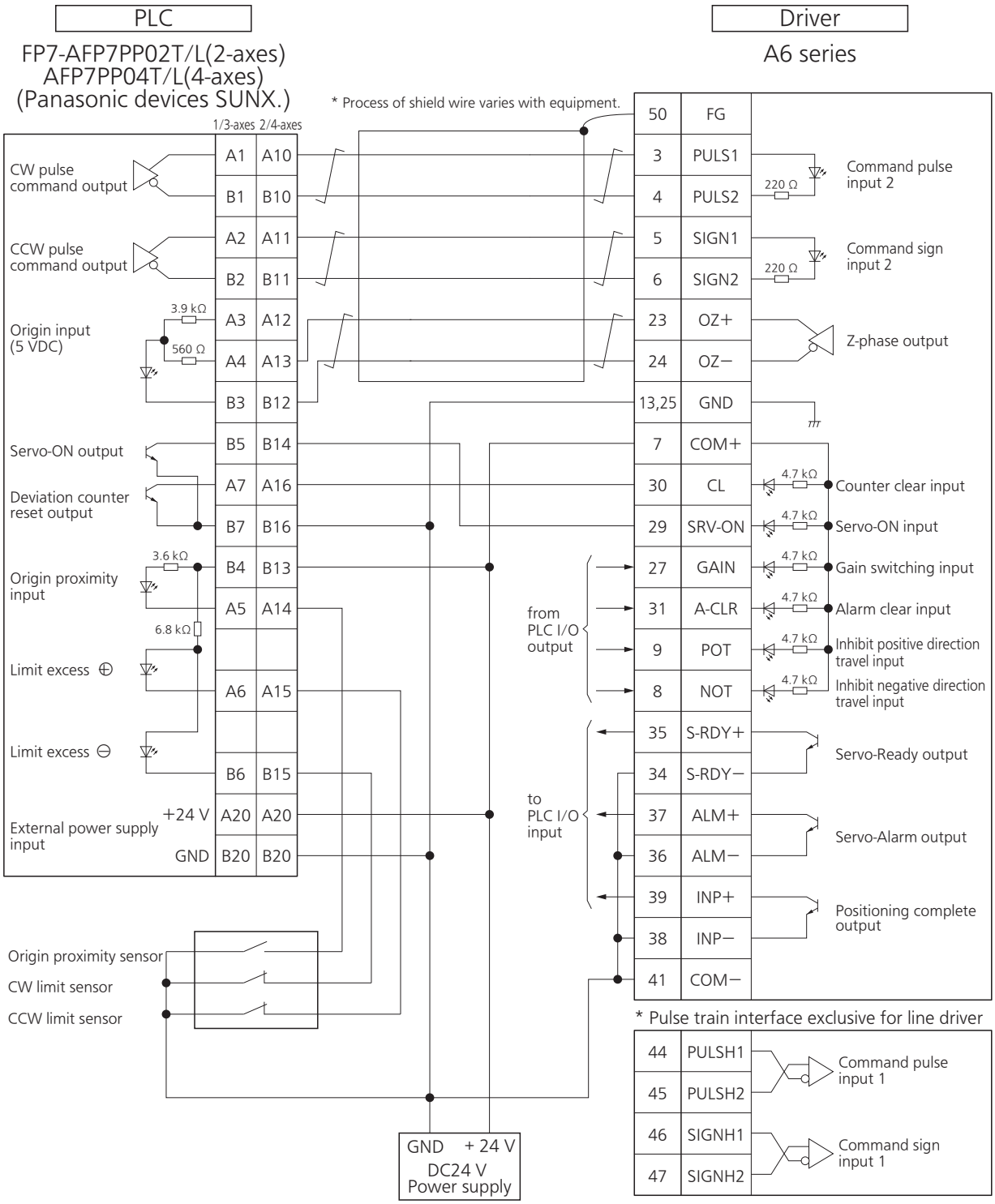

* When connecting, please make sure to use twisted-pair cable.
* The internal circuit of the host controller may be changed. About the latest information please confirm to host controller maker.

Pulse train interface exclusive for line driver.
Use this interface when you use pulse command frequency between 500 kpulse/s and 8 Mpulse/s

Note represents twisted pair wire.

Related page • P.3-34 “Inputs and outputs on connector X4”

Connection between MINAS A6 and FPG-PP12 AFPG432 Panasonic devices SUNX.

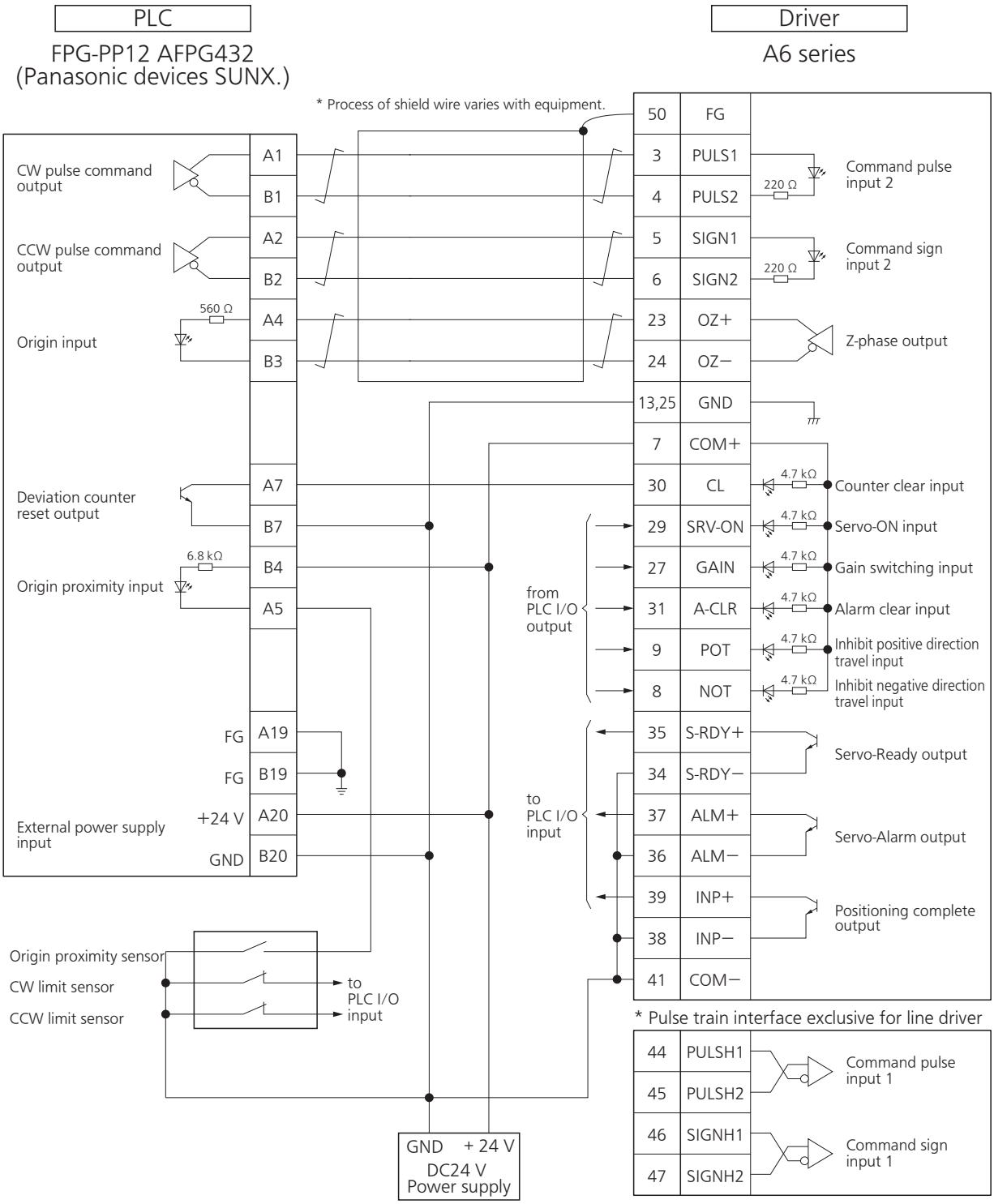

* When connecting, please make sure to use twisted-pair cable.
* The internal circuit of the host controller may be changed. About the latest information please confirm to host controller maker.

Pulse train interface exclusive for line driver.
Use this interface when you use pulse command frequency between 500 kpulse/s and 8 Mpulse/s.

Note represents twisted pair wire.

Related page
• P.3-34 “Inputs and outputs on connector X4”

Connection between MINAS A6 and FP2-PP2 AFP2430 Panasonic devices SUNX.

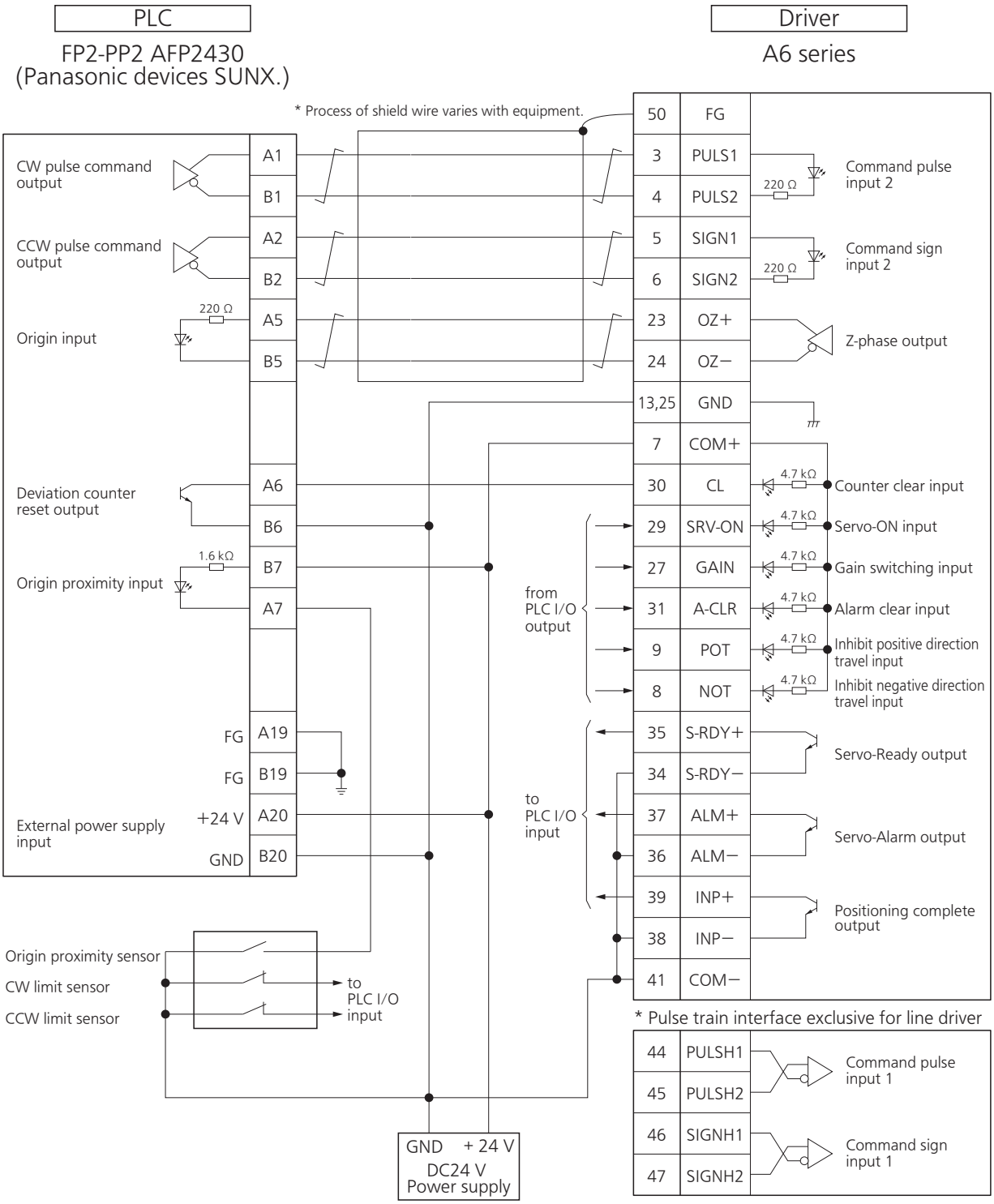

* When connecting, please make sure to use twisted-pair cable.
* The internal circuit of the host controller may be changed. About the latest information please confirm to host controller maker.

Pulse train interface exclusive for line driver.
Use this interface when you use pulse command frequency between 500 kpulse/s and 8 Mpulse/s

Note represents twisted pair wire.

Related page • P.3-34 “Inputs and outputs on connector X4”

Connection between MINAS A6 and FPG-C32T Panasonic devices SUNX.

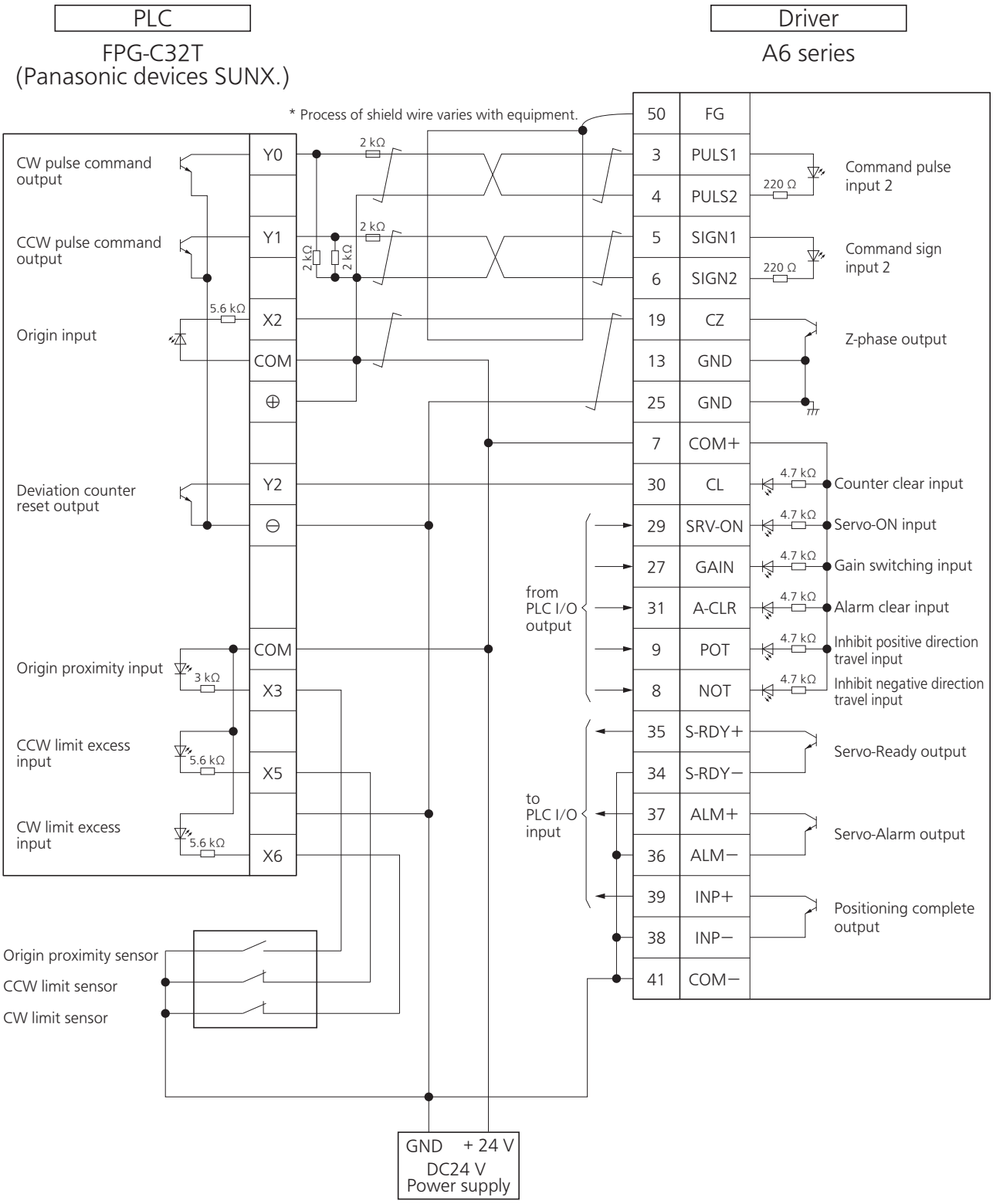

* When connecting, please make sure to use twisted-pair cable.

* The internal circuit of the host controller may be changed. About the latest information please confirm to host controller maker.

Note represents twisted pair wire.

Related page • P.3-34 “Inputs and outputs on connector X4”

Connection between MINAS A6 and F3YP22-0P/F3YP24-0P/F3YP28-0P Yokogawa Electric Corp.

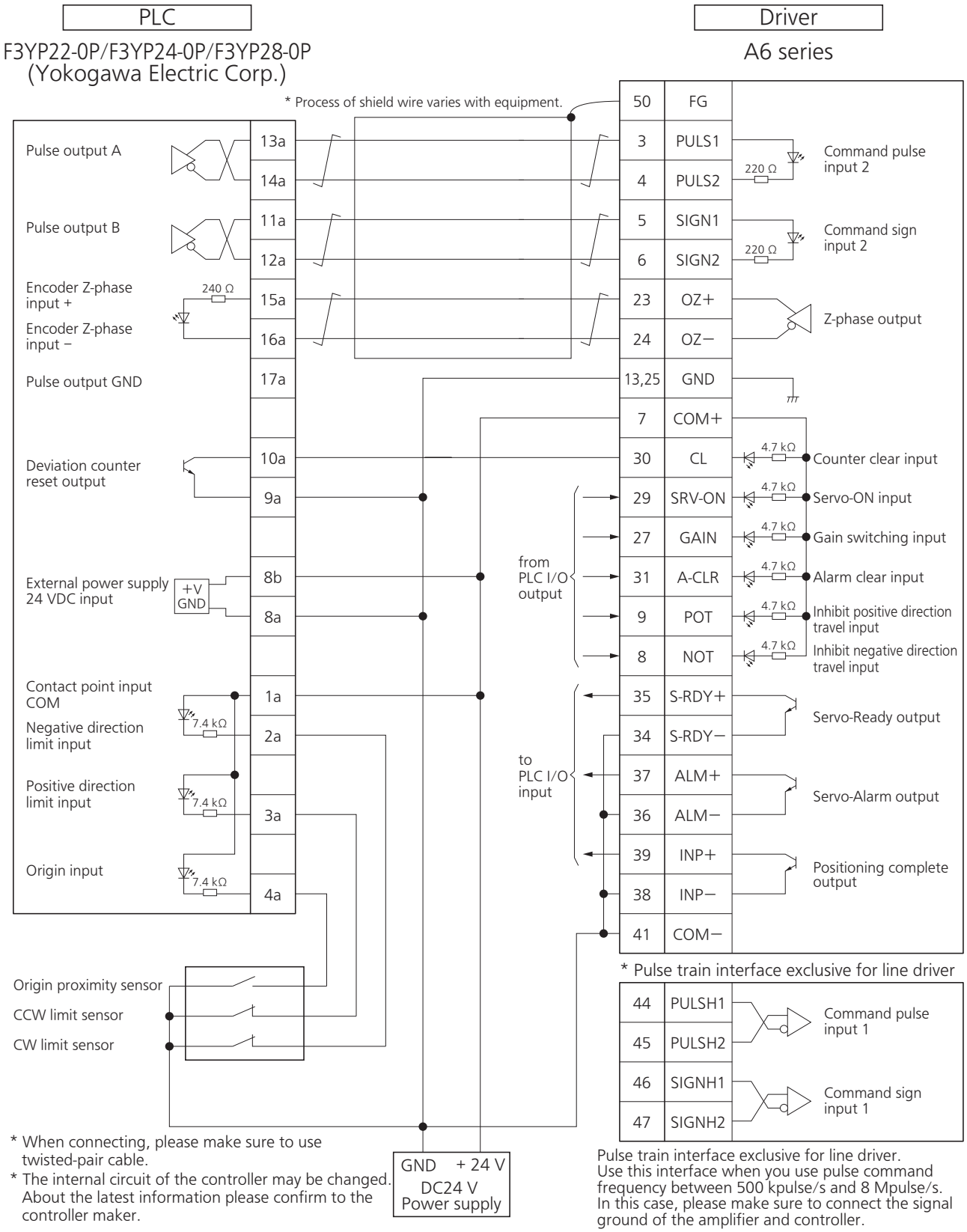

* When connecting, please make sure to use twisted-pair cable.
* The internal circuit of the controller may be changed. About the latest information please confirm to the controller maker.

Pulse train interface exclusive for line driver.
Use this interface when you use pulse command frequency between 500 kpulse/s and 8 Mpulse/s.
In this case, please make sure to connect the signal ground of the amplifier and controller.

Note represents twisted pair wire.

Related page • P.3-34 “Inputs and outputs on connector X4”

Connection between MINAS A6 and F3NC32-ON/F3NC34-ON Yokogawa Electric Corp.

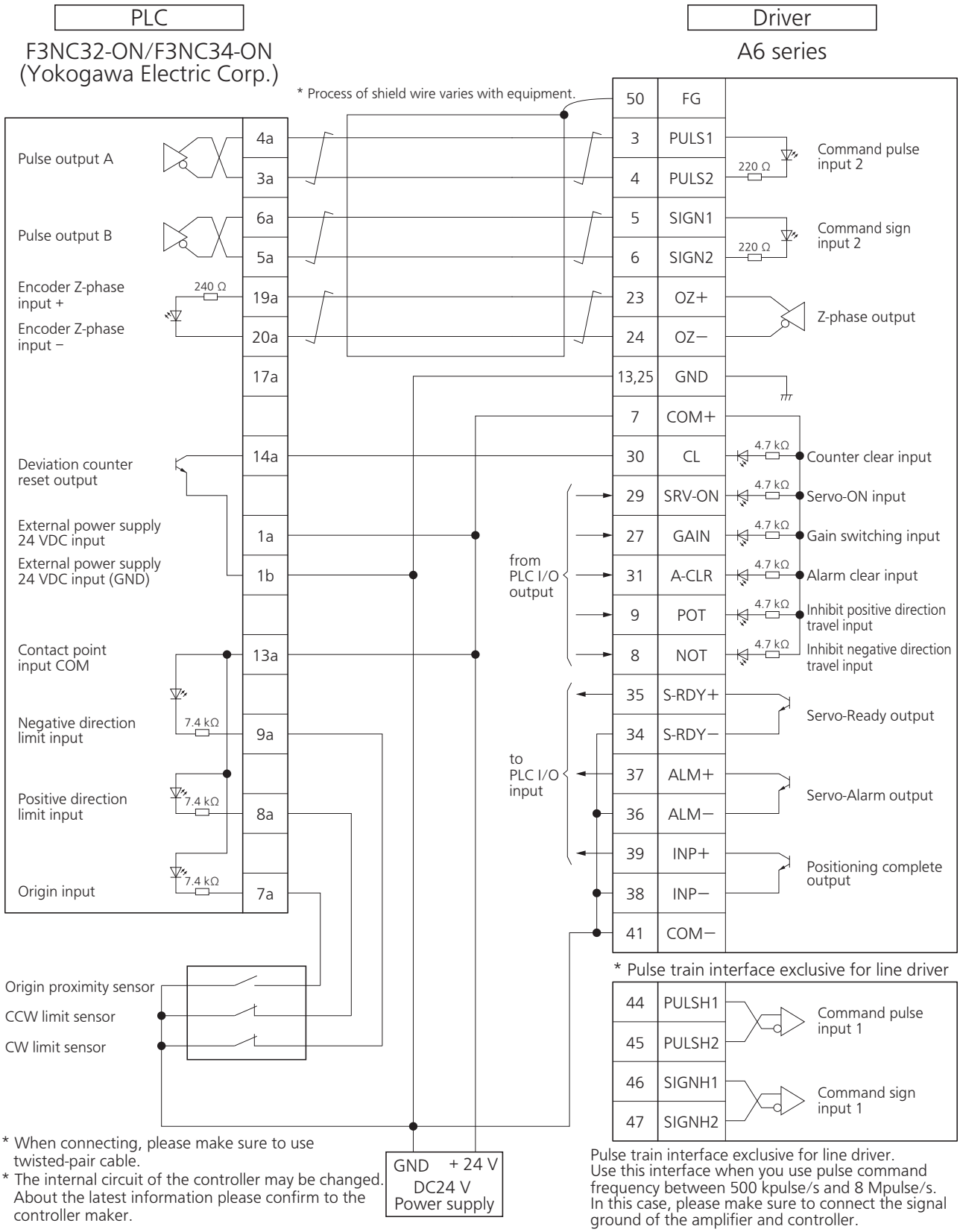

Note represents twisted pair wire.

Related page • P.3-34 “Inputs and outputs on connector X4”

Connection between MINAS A6 and CJ1W-NC113 Omron Corp.

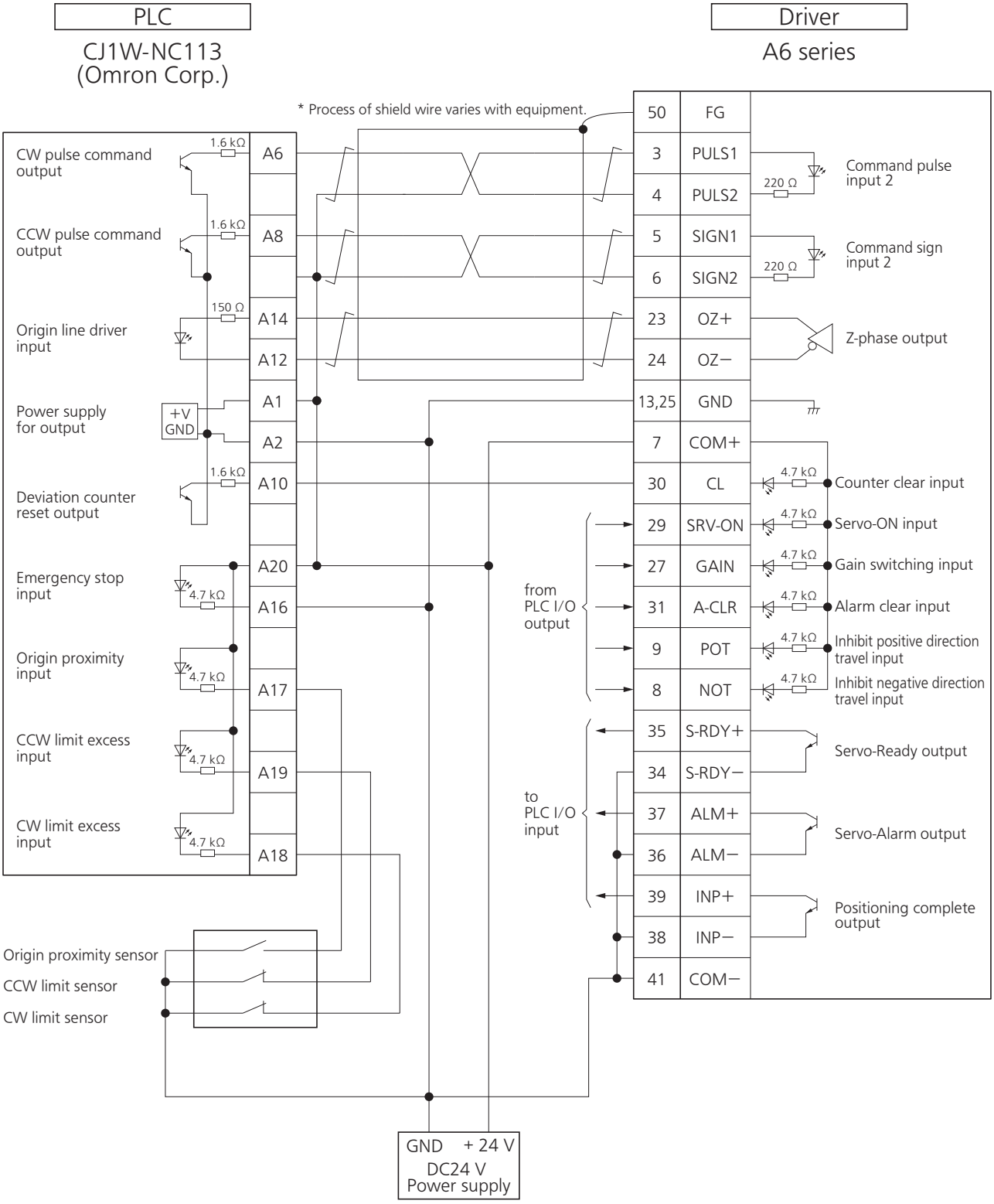

* When connecting, please make sure to use twisted-pair cable.
* The internal circuit of the host controller may be changed. About the latest information please confirm to host controller maker.

Note represents twisted pair wire.

Related page • P.3-34 “Inputs and outputs on connector X4”

Connection between MINAS A6 and CJ1W-NC133 Omron Corp.

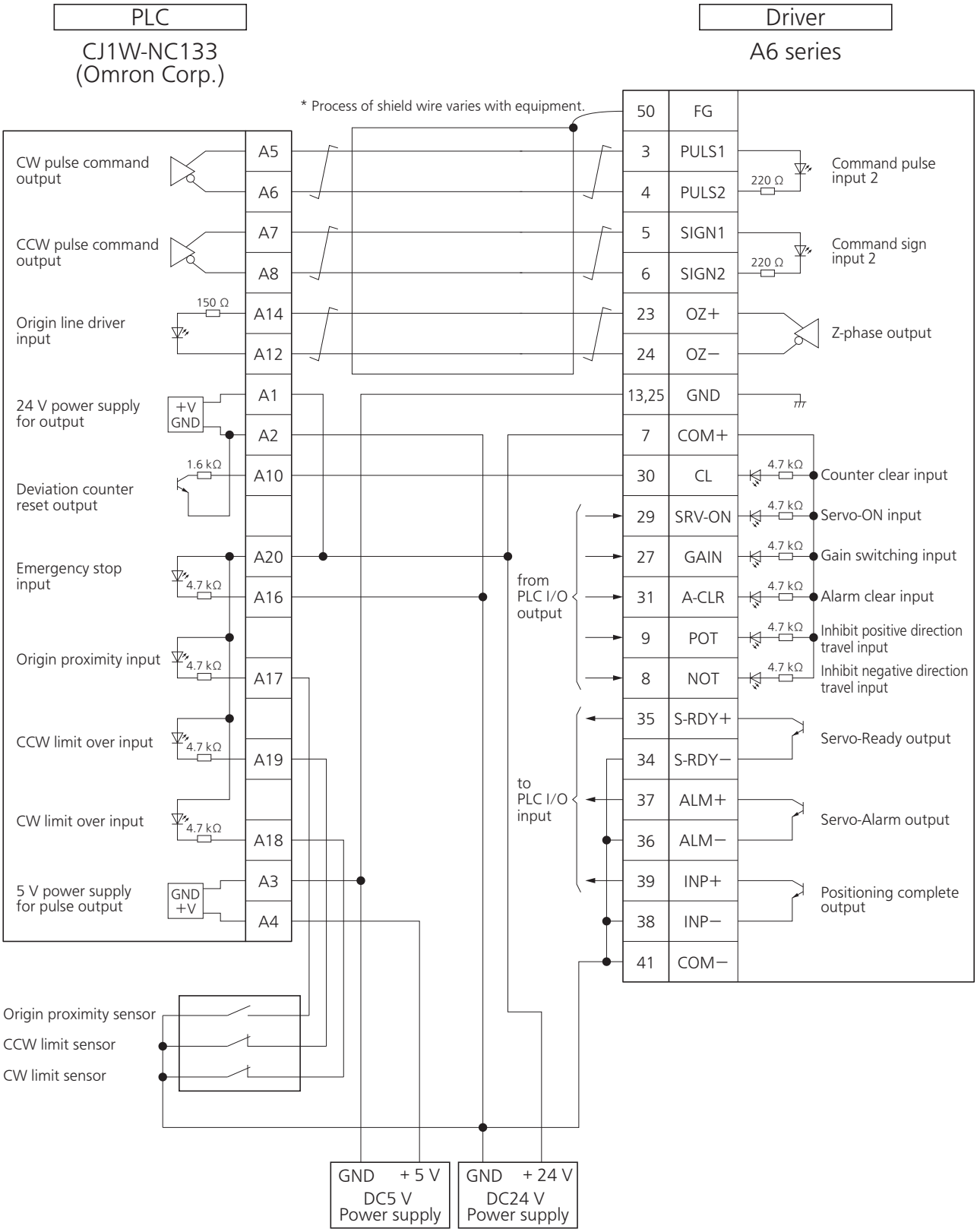

* When connecting, please make sure to use twisted-pair cable.
* The internal circuit of the host controller may be changed. About the latest information please confirm to host controller maker.

Note represents twisted pair wire.

Related page • P.3-34 “Inputs and outputs on connector X4”

Connection between MINAS A6 and QD75D1 Mitsubishi Electric Corp.

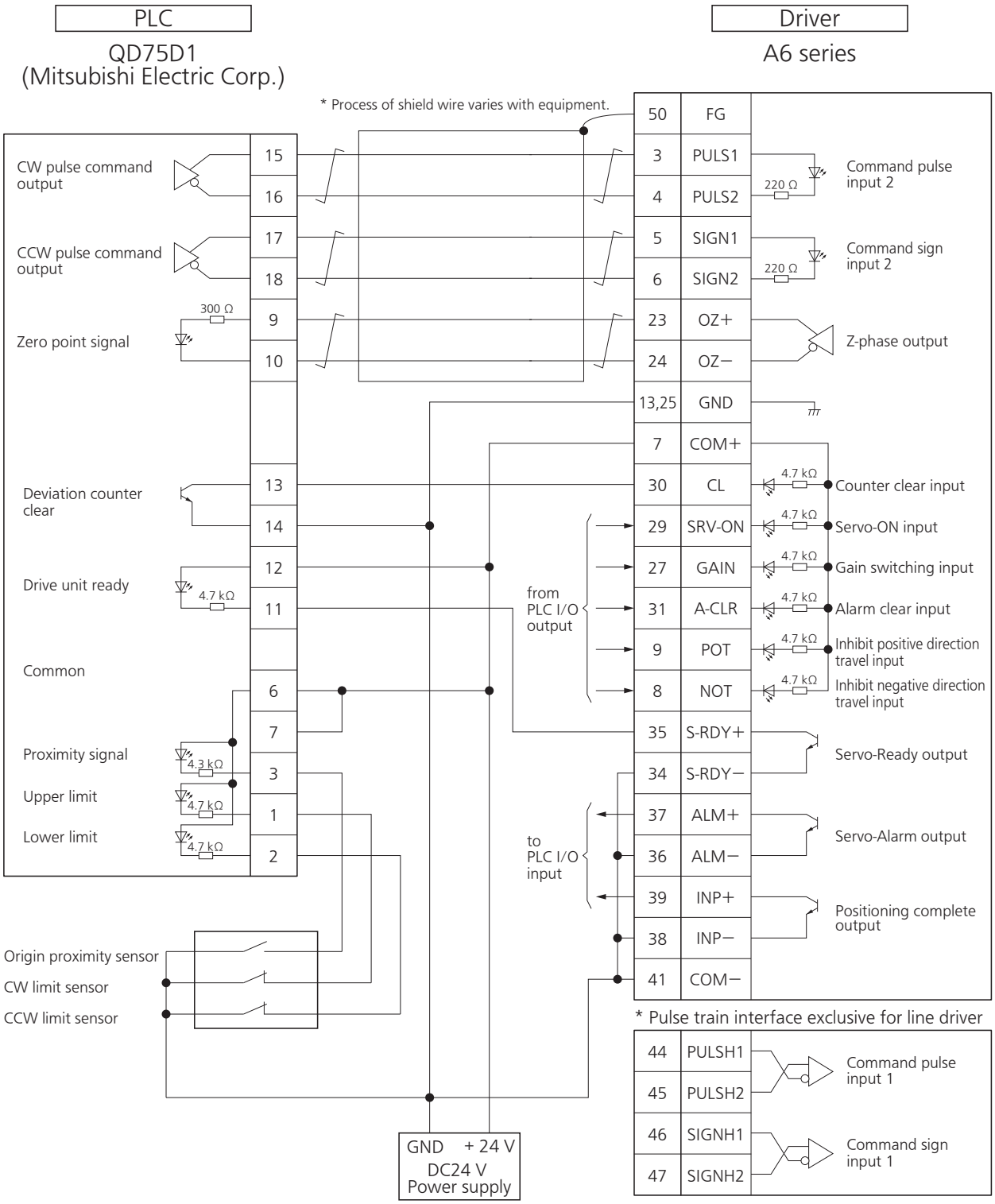

* When connecting, please make sure to use twisted-pair cable.
* The internal circuit of the host controller may be changed. About the latest information please confirm to host controller maker.

Pulse train interface exclusive for line driver.
Use this interface when you use pulse command frequency between 500 kpulse/s and 8 Mpulse/s

Note represents twisted pair wire.

Related page • P.3-34 “Inputs and outputs on connector X4”

Connection between MINAS A6 and KV-5000/3000 KEYENCE Corp.

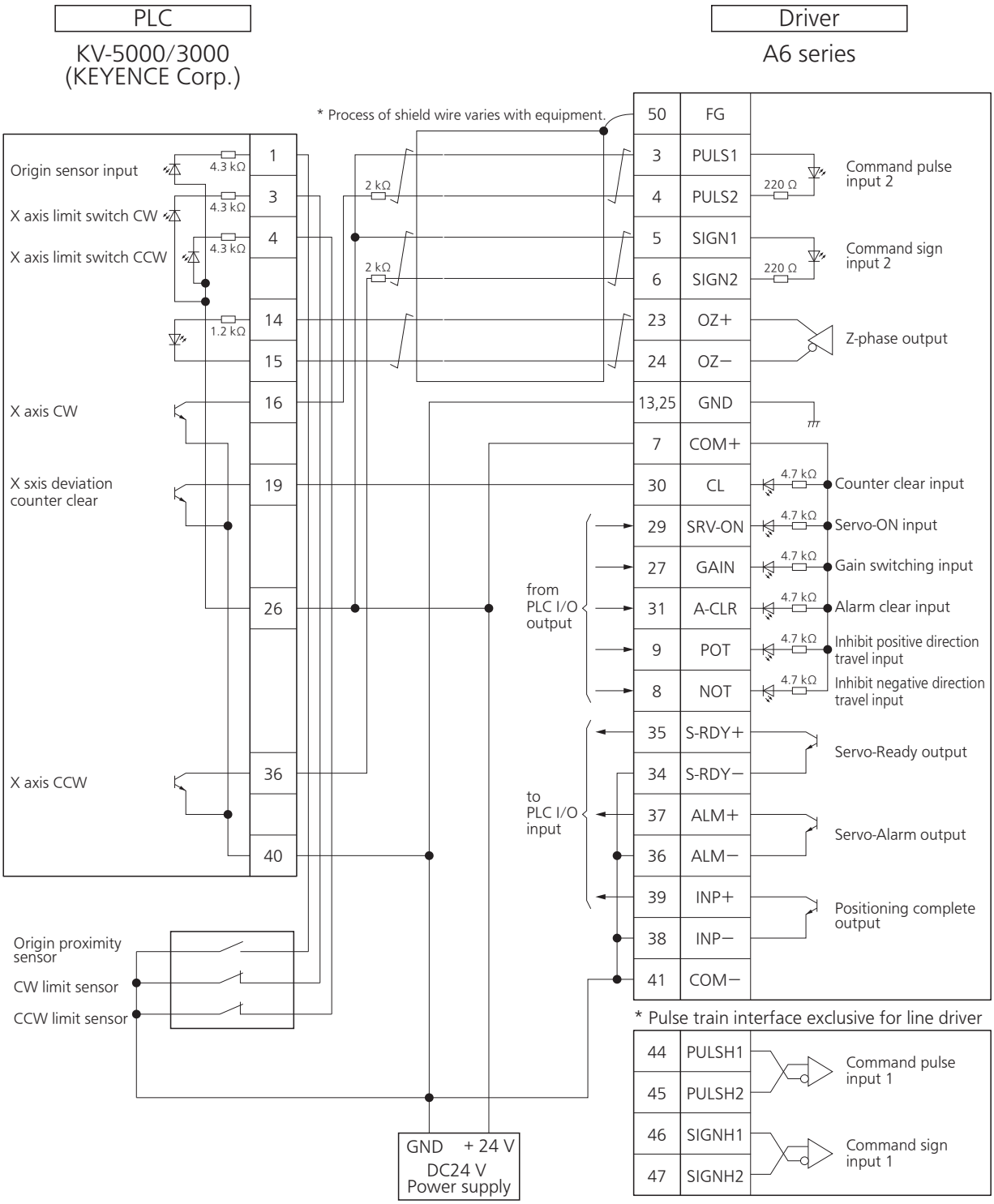

* When connecting, please make sure to use twisted-pair cable.
* The internal circuit of the host controller may be changed. About the latest information please confirm to host controller maker.

Pulse train interface exclusive for line driver.
Use this interface when you use pulse command frequency between 500 kpulse/s and 8 Mpulse/s

Note represents twisted pair wire.

Related page • P.3-34 “Inputs and outputs on connector X4”

4. Inputs and outputs on connector X4

Interface Circuit (Input)

Input Circuit

SI	Connection to sequence input signals	Related control mode	P	S	T	F

- Connect to contacts of switches and relays, or open collector output transistors.
- When you use contact inputs, use the switches and relays for micro current to avoid contact failure.
- Make the lower limit voltage of the power supply (12 V to 24 V) as 11.4 V or more in order to secure the primary current for photocouplers.

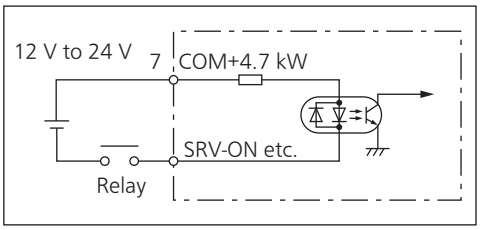

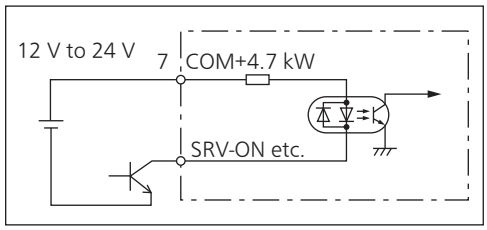

- 10 systems: SI1 to SI10. For assign and function, refer to P.3-41 to P.3-46.

Note Related page P.3-55

PI1	Connection to sequence input signals (Pulse train interface)	Related control mode	P	S	T	F

(1) Line driver I/F (Permissible max. input frequency of command pulse input signal.: 500 kpulse/s)
- This signal transmission method has better noise immunity. We recommend this to secure the signal transmission.

(2) Open collector I/F (Permissible max. input frequency of command pulse input signal.: 200 kpulse/s)
- The method which uses an external control signal power supply (VDC)
- Current regulating resistor (R) corresponding to V_{DC} is required in this case.
- Connect the specified resister as below.
- (R) should be placed close to the driver for effective noise reduction.

VDC	Specifications
12 V	820 W1/2 W
24 V	2 kW1/2 W

$$\frac{VDC - 1.5}{R + 220} \fallingdotseq 10\ mA$$

(3) Open collector I/F (Permissible max. input frequency of command pulse input signal.: 200 kpulse/s)
- Connecting diagram when a current regulating resistor is not used with 24 V power supply.

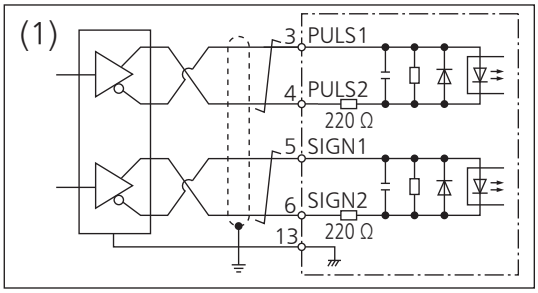

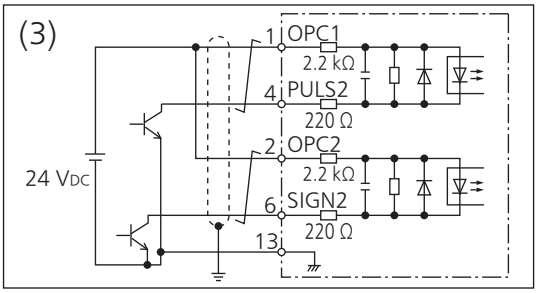

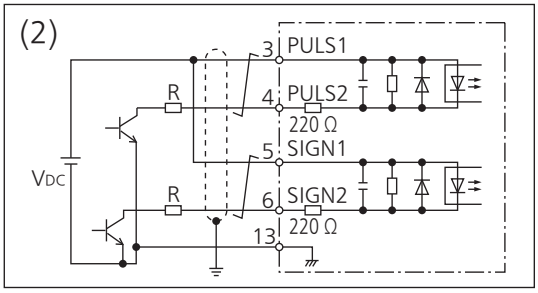

* Keep the length of wiring short (1 m or less).
Max.input voltage :
DC24 V, Rated current : 10 mA
represents twisted pair.
When using open collector interface, it is recommended to set Pr0.05 to 2.

- 1 system: PI1. For function, refer to P.3-39, P.3-40.

PI2	Connection to sequence input signals (Pulse train interface exclusive to line driver)	Related control mode	P	S	T	F

Line driver I/F (Permissible max. input frequency of command pulse input signal.: 8 Mpulse/s)

- This signal transmission method has better noise immunity.
  We recommend this to secure the signal transmission when line driver I/F is used.

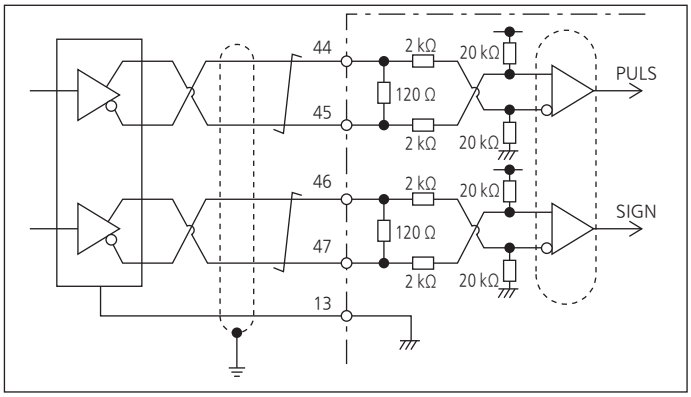

represents twisted pair.

- 1 system: PI2. For function, refer to P.3-39, P.3-40.

AI	Analog command input	Related control mode	P	S	T	F

- It goes through 3 systems, AI1 to AI3.
- Max. permissible input voltage to each input is ± 10 V.
  For input impedance of each input, refer to the right Fig.
- When you compose a simple command circuit using variable resistor(VR) and register R, connect as the right Fig. shows. When the variable range of each input is made as −10 V to +10 V, use VR with 2 k Ω , B-characteristics, 1/2 W or larger, R with 200 Ω , 1/2 W or larger.
- A/D converter resolution of each command input is as follows.
  (1)ADC1 : 16-bit (AI1)
  (2)ADC2 : 12-bit (AI2, AI3)

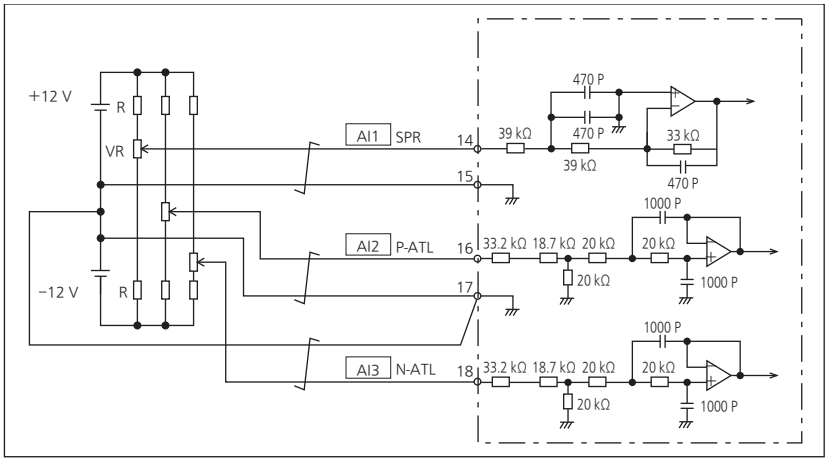

represents twisted pair.

- For function, refer to P.3-47, P.3-48.

Note Only for the position control type and communication type are not provided with analog input.

Output Circuit

SO	Sequence output circuit	Related control mode	P	S	T	F

- The output circuit is composed of open collector transistor outputs in the Darlington connection, and connect to relays or photocouplers.
- There exists collector to emitter voltage, V_{CE} (SAT) of approx. 1V at transistor-ON, due to the Darlington connection of the output or. Note that normal TTL IC cannot be directly connected since it does not meet VIL.
- There are two types of output, one (2 systems of SO5, SO6) which emitter side of the output transistor is independent and is connectable individually, and the one (4 systems of SI1 to SI4) which is common to − side of the control power supply (COM−).
- If a recommended primary current value of the photocoupler is 10 mA, decide the resistor value using the formula of the below figure.
- When accepting the output signal through a logic circuit, e.g. gate, influence from noises should be prevented.

For the recommended primary current value, refer to the data sheet of the equipment and photocoupler to be used.

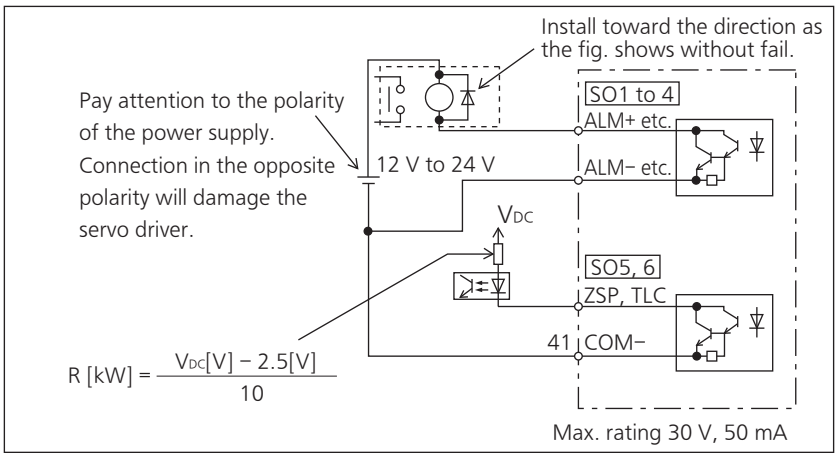

Note
- For function, refer to P.3-49to P.3-54.

Related page P.3-56

PO1	Line driver (Differential output) output	Related control mode	P	S	T	F

- Feeds out the divided encoder outputs (A, B and Z-phase) in differential through each line driver.
- At the host side, receive these in line receiver. Install a terminal resistor (approx. 330 Ω) (right figure (1)) between line receiver inputs without fail.
- These outputs are not insulated.

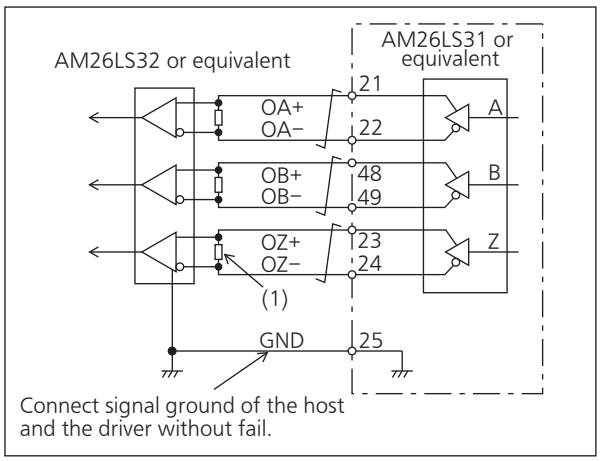

represents twisted pair.

- For function, refer to P.3-52.

PO2	Open collector output	Related control mode	P	S	T	F

- Feeds out the Z-phase signal among the encoder signals in open collector. This output is not insulated.
- Receive this output with high-speed photocouplers at the host side, since the pulse width of the Z-phase signal is narrow.

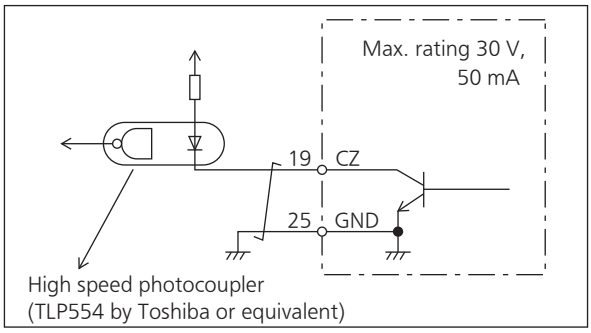

represents twisted pair.

- For function, refer to P.3-52

AO	Analog monitor output	Related control mode	P	S	T	F

- There are two outputs, the speed monitor signal output (SP) and the torque monitor signal output (IM)
- Output signal width is ± 10 V.
- The output impedance is 1 k Ω . Pay an attention to the input impedance of the measuring instrument or the external circuit to be connected.

<Resolution>

(1)Speed monitor output (SP)

With a setup of 6 V/3000 r/min, the resolution converted to speed is 4 r/min/8 mV.

(2)Torque monitor output (IM)

With a relation of 2 V/rated torque (100 %), the resolution converted to torque is 0.4 %/8 mV.

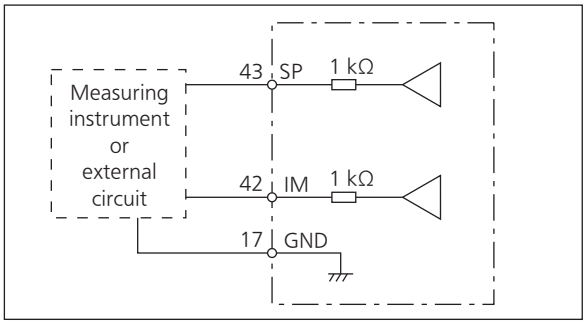

- For function, refer to P.3-54

Input Signals (common) and Their Functions

Pin No.	7	Title of signal	Power supply for control signal (+)	Related control mode	P	S	T	F
		Symbol	COM+	I/F circuit	—			

- Connect + of the external DC power supply (12 V to 24 V).
- Use the power supply voltage of 12 V ± 5 % to 24 V ± 5 %

Pin No.	41	Title of signal	Power supply for control signal (−)	Related control mode	P	S	T	F
		Symbol	COM−	I/F circuit	—			

- Connect − of the external DC power supply (12 V to 24 V).
- The power capacity varies depending on a composition of I/O circuit. 0.5 A or more is recommended.

Connect this Pin when use Pin 12, 40.

Input Signals (Pulse Train) and Their Functions

You can select appropriate interface out of two kinds, depending on the command pulse specifications.

- Pulse train interface exclusive for line driver

Pin No.	44 45	Title of signal	Command pulse input 1	Related control mode	P S T F
		Symbol	Pin No.44: PULSH1 Pin No.45: PULSH2	I/F circuit	PI2 P.3-35

Pin No.	46 47	Title of signal	Command pulse sign input 1	Related control mode	P S T F
		Symbol	Pin No.46: SIGNH1 Pin No.47: SIGNH2	I/F circuit	PI2 P.3-35

- Input terminal for position command pulse. You can select by setting up Pr0.05 (Selection of command pulse input) to 1.
- This input becomes invalid at such control mode as velocity control or torque control, where no position command is required.
- Permissible max. input frequency is 8 Mpulse/s (After quadruple).
- You can select up to 6 command pulse input formats with Pr0.06 (Setup of command pulse rotational direction) and Pr0.07 (Setup of command pulse input mode).
  For details, refer to the table next page, "Command pulse input format".

- Pulse train interface (supports both line driver and open collector)

Pin No.	1 3 4	Title of signal	Command pulse input 2	Related control mode	P S T F
		Symbol	Pin No.1: OPC1 Pin No.3: PULS1 Pin No.4: PULS2	I/F circuit	PI1 P.3-34

Pin No.	2 5 6	Title of signal	Command pulse sign input 2	Related control mode	P S T F
		Symbol	Pin No.2: OPC2 Pin No.5: SIGN1 Pin No.6: SIGN2	I/F circuit	PI1 P.3-34

- Input terminal for the position command. You can select by setting up Pr0.05 (Selection of command pulse input) to 0.
  When using open collector interface, it is recommended to set Pr0.05 to 2.
- This input becomes invalid at such control mode as the velocity control or torque control, where no position command is required.
- Permissible max. input frequency is 500 kpulse/s at line driver input and 200 kpulse/s at open collector input.
- You can select up to 6 command pulse input formats with Pr0.06 (Setup of command pulse rotational direction) and Pr0.07 (Setup of command pulse input mode).
  For details, refer to the table next page, "Command pulse input format".

Related page
- P.3-34 “Inputs and outputs on connector X4”
- P.4-10 “Details of parameter”

• Input format command pulse

Pr0.06 setup value (Command pulse rotational direction setup)	Pr0.07 setup value (Command pulse input mode setup)	Command pulse format	Signal title	Positive direction command	Negative direction command
0	0 or 2	90° phase difference 2-phase pulse (A + B-phase)	PULS SIGN	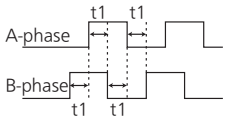 B-phase advances to A by 90°.	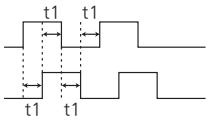 B-phase delays from A by 90°.
	1	Positive direction pulse train + Negative direction pulse train	PULS SIGN	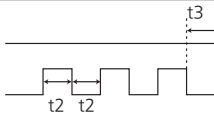	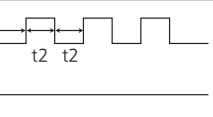
	3	pulse train + Signal	PULS SIGN	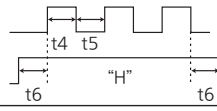	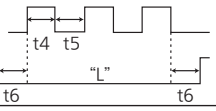
1	0 or 2	90° phase difference 2-phase pulse (A + B-phase)	PULS SIGN	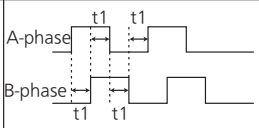 B-phase delays from A by 90°.	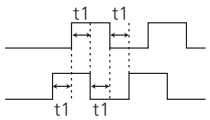 B-phase advances to A by 90°.
	1	Positive direction pulse train + Negative direction pulse train	PULS SIGN	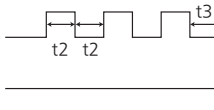	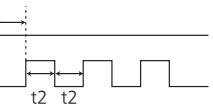
	3	pulse train + Signal	PULS SIGN	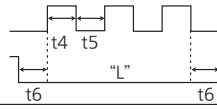	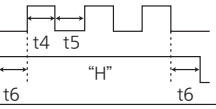

• PULS and SIGN represents the outputs of pulse train in put circuit. Refer to the fig. of P.3-33, "Input Circuit".
• In case of negative direction pulse train + positive direction pulse train and pulse train + sign, pulse train will be cap tured at the rising edge.
• In case of 2-phase pulse, pulse train will be captured at each edge.

• Permissible max. input frequency, and min. necessary time width of command pulse input signal.

Input I/F of PULS/SIGN signal		Permissible max. input frequency	Min. necessary time width (μs)					
			t1	t2	t3	t4	t5	t6
Pulse train interface exclusive to line driver PULSH1,2,SIGNH1,2	A,B-phase Input, multiple of 4	8 Mpulse/s	0.125	0.125	0.125	0.125	0.125	0.125
	Not A,B-phase Input	4 Mpulse/s	0.25	0.125	0.125	0.125	0.125	0.125
Pulse train interface PULS1,2,SIGN1,2	Line driver interface	200 kpulse/s	2	1	1	1	1	1
	Open collector interface	200 kpulse/s	5	2.5	2.5	2.5	2.5	2.5

Related page • P.4-11 "Details of Parameter"

Control Input

Control signal having the desired function can be applied to any input pin of I/F connector. The logic can be changed.

- Default assignment

				Applicable parameter	Default parameter setting ( ): decimal notation	Default Setup					
						Position/ Full-closed control		Verocity control		Torque control	
						Signal	Logic *1	Signal	Logic *1	Signal	Logic *1
Pin No.	8	Title of signal	SI1 input	Pr4.00	00828282h (8553090)	NOT	Normal Colse	NOT	Normal Colse	NOT	Normal Colse
		Symbol	SI1								
Pin No.	9	Title of signal	SI2 input	Pr4.01	00818181h (8487297)	POT	Normal Colse	POT	Normal Colse	POT	Normal Colse
		Symbol	SI2								
Pin No.	26	Title of signal	SI3 input	Pr4.02	0091910Ah (9539850)	VS-SEL1	Normal Open	ZEROSPD	Normal Colse	ZEROSPD	Normal Colse
		Symbol	SI3								
Pin No.	27	Title of signal	SI4 input	Pr4.03	00060606h (394758)	GAIN	Normal Open	GAIN	Normal Open	GAIN	Normal Open
		Symbol	SI4								
Pin No.	28	Title of signal	SI5 input	Pr4.04	0000100Ch (4108)	DIV1	Normal Open	INTSPD3	Normal Open	—	—
		Symbol	SI5								
Pin No.	29	Title of signal	SI6 input	Pr4.05	00030303h (197379)	SRV-ON	Normal Open	SRV-ON	Normal Open	SRV-ON	Normal Open
		Symbol	SI6								
Pin No.	30	Title of signal	SI7 input	Pr4.06	00000f07h (3847)	CL	Normal Open	INTSPD2	Normal Open	—	—
		Symbol	SI7								
Pin No.	31	Title of signal	SI8 input	Pr4.07	00040404h (263172)	A-CLR	Normal Open	A-CLR	Normal Open	A-CLR	Normal Open
		Symbol	SI8								
Pin No.	32	Title of signal	SI9 input	Pr4.08	00050505h (328965)	C-MODE	Normal Open	C-MODE	Normal Open	C-MODE	Normal Open
		Symbol	SI9								
Pin No.	33	Title of signal	SI10 input	Pr4.09	00000E88h (3720)	INH	Normal Colse	INTSPD1	Normal Open	—	—
		Symbol	SI10								

- The function depends on parameter setup. Refer to P.4-38, P.4-40.
  Refer to the next section "Function assignable to general purpose input" .

Note

*1 Operation of Normal Open and Normal Colse:
Normal Open: Input signal disconnected from COM− function disabled (OFF state)
Input signal connected to COM− function enabled (ON state)
Normal Colse: Input signal disconnected from COM− function enabled (ON state)
Input signal connected to COM function disabled (OFF state)
[—]: No function assigned

Related page P.3-55

Caution

- Safety Precautions

Usually, please set drive inhibit input (POT, NOT) and forced alarm input (ESTOP) to Normal Colse that is used to stop upon disconnection of cable. When setting the drive inhibit input to Normal Open, verify that the setting will not cause safety problem.
For the same reason as described above, it is recommended to set servo-on input (SRV-ON) to Normal Open.
When setting the input to Normal Colse, verify that the setting will not cause safety problem.

Function allocatable to control input

Title of signal	Servo-ON input			Related control mode	P	S	T	F
Symbol	SRV-ON	Default assignment	29 (SI6)	I/F circuit	SI	P.3-34		

- This signal turns on/off the servo (motor).

Title of signal	Positive direction over-travel inhibition input			Related control mode	P	S	T	F
Symbol	POT	Default assignment	9 (SI2)	I/F circuit	SI	P.3-34		

- Positive direction over-travel inhibit input.
- The operation with this input turned ON is set up in Pr5.04 “Setup of over-travel inhibit input” .
- When using this input, set Pr5.04 “Setup of over-travel inhibit input” to a value other than 1 so that the input is OFF when the moving portion of the machine exceeds this signal range toward positive direction.

Title of signal	Negative direction over-travel inhibition input			Related control mode	P	S	T	F
Symbol	NOT	Default assignment	8 (SI1)	I/F circuit	SI	P.3-34		

- Negative direction over-travel inhibit input.
- The operation with this input turned ON is set up in Pr5.04 “Setup of over-travel inhibit input” .
- When using this function, set Pr5.04 “Setup of over-travel inhibit input” to a value other than 1 so that the input is OFF when the moving portion of the machine exceeds this signal range toward negative direction.

Title of signal	Deviation counter clear input			Related control mode	P	S	T	F
Symbol	CL	Default assignment	30 (SI7)	I/F circuit	SI	P.3-34		

- Clears the positional deviation counter.
- Default setup clears the counter at the rising edge of the clear input, To change the setup, modify it in the Pr5.17 “Counter clear input mode” .

<Signal width and clear timing>

Pr5.17	CL signal width	Deviation clear timing
1	500 μs or more	Continually clear the counter while the deviation counter clear input is ON. *1
2	1 ms or more	
3	100 μs or more	Only once clear the counter at OFF to ON edge of the deviation counter clear input signal. *1
4	1 ms or more	

*1 Deviation counter clear input ON/OFF = input photocoupler ON/OFF

Caution This function can be assigned to only SI7. Allocation of this function to any other pin will cause an error.

Related page • P.4-52, 57 “Details of Parameter”

Title of signal	Alarm clear input			Related control mode	P	S	T	F
Symbol	A-CLR	Default assignment	31 (SI8)	I/F circuit	SI	P.3-34		

- Clears the alarm condition.
- This input cannot clear some alarms.
- For details, refer to P.6-3 When in Trouble "Protective function" , P.2-122 "(8) Alarm Display" and P.7-27 "Display of Battery Alarm" .

Caution When alarm clear input (A-CLR) is kept enabled, all potential alarms and warnings will be prevented.

Title of signal	Command pulse inhibition input			Related control mode	P	S	T	F
Symbol	INH	Default assignment	33 (SI10)	I/F circuit	SI	P.3-34		

- Ignores the positional command pulse.
- When using this feature, set Pr5.18 "Invalidation of command pulse inhibition input" to 0 or 2.

Caution This function can be assigned to only SI10. Allocation of this function to any other pin will cause an error.

When INH input is ON, the deviation will be caused between the positional command administrated by controller and internal positional command from the fliter that receives the positional command from servo drivers, and orginal location before being input INH positional command will be lost. Therefore, it is supposed to reset the orignial location when it needs to restart return to origin action.

Title of signal	Control mode switching input			Related control mode	P	S	T	F
Symbol	C-MODE	Default assignment	32 (SI9)	I/F circuit	SI	P.3-34		

- Selects a control mode.

Caution
- This signal is required in all control modes. No setting will cause an error.
- Do not input any command 10 ms before and after changing the control mode.

Title of signal	Electronic gear (division/multiplication) switching input 1			Related control mode	P	S	T	F
Symbol	DIV1	Default assignment	28 (SI5)	I/F circuit	SI	P.3-34		

Title of signal	Electronic gear (division/multiplication) switching input 2			Related control mode	P	S	T	F
Symbol	DIV2	Default assignment	—	I/F circuit	SI	P.3-34		

- Up to 4 numerators can be used for command dividing/multiplying by using DIV1 and DIV2.
  <DIV1 and DIV2 vs numerator/denominator of selected command dividing/multiplying process>

DIV1	DIV2	Selected command dividing/multiplying process	
		Numerator	Denominator
OFF	OFF	Pr0.09	Pr0.10
ON	OFF	Pr5.00	Pr0.10
OFF	ON	Pr5.01	Pr0.10
ON	ON	Pr5.02	Pr0.10

The numerator of command division can be changed by using DIV1 and DIV2 can be switched, the relationship of the positional command that send from servo drivers and internal positional command will be change. Therefore, it is supposed to reset the orignial location when it needs to restart return to origin action.

Title of signal	Damping control switching input 1			Related control mode	P	S	T	F
Symbol	VS-SEL1	Default assignment	26 (SI3)	I/F circuit	SI	P.3-34		

Title of signal	Damping control switching input 2			Related control mode	P	S	T	F
Symbol	VS-SEL2	Default assignment	—	I/F circuit	SI	P.3-34		

- Selects applicable frequency for damping control.
  Combination of damping control input changeover 1 and 2 (VS-SEL1, VS-SEL2) enables select of max. 4 options.

Note Also refer to P.4-26 "Pr2.13 [Selection of damping filter switching]" .

Title of signal	Gain switching input			Related control mode	P	S	T	F
Symbol	GAIN	Default assignment	27 (SI4)	I/F circuit	SI	P.3-34		

- Select 1st or 2nd gain.

Title of signal	Torque limit switching input			Related control mode	P	S	T	F
Symbol	TL-SEL	Default assignment	—	I/F circuit	SI	P.3-34		

- Select 1st or 2nd torque limit.

Pr5.21	Torque limit switching input (TL-SEL)	Torque limit switching setup (Pr5.23, Pr5.24)	Positive direction Torque limit	Negative direction Torque limit
0			Analog input *1	
1	—	—	Pr0.13	
2	—	—	Pr0.13	Pr5.22
3	OFF	Valid	Pr0.13	
	ON		Pr5.22	
4			Analog input *1	
5				
6	OFF	—	Pr0.13	Pr5.22
	ON		Pr5.25	Pr5.26

*1 To specify the torque limit value by an analog input, refer to Pr5.21 "Analog torque limit function" .

- Setup of rate of change after torque limit switchover

When applying Pr5.21 "Torque limit selection" = 3, changing rate of torque (slope) after selecting new torque limit can be changed.
When changing from the 1st torque limit to 2nd torque limit, the changing rate (slope) set at Pr5.23 "Torque limit selection setup 1" is applied; after changing from the 2nd torque limit to 1st torque limit, the changing rate (slope) set at Pr5.24 "Torque limit selection setup 2" is applied. The sign of the changing rate is automatically selected by the driver according to the difference in value between the 1st and 2nd torque limit.
If Pr5.23 "Torque limit selection setup 1" and Pr5.24 "Torque limit selection setup 2" are set to 0, switchover is instantaneous.

Related page • P.4-15,58,59 "Details of Parameter"

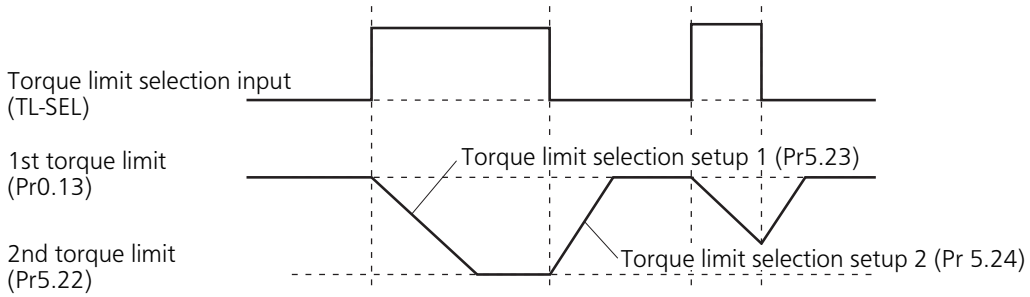

Caution When the 1st torque limit (Pr0.13) and 2nd torque limit (Pr5.22) are changed from the front panel or through communication, the changing rate setup is ignored and the new torque limit value is immediately and directly applied. That is, changing rate setting is effective only when the selection is made by using the torque limit select input (TL-SEL).

Title of signal	Selection 1 input of internal command speed			Related control mode	P S T F
Symbol	INTSPD1	Default assignment	33 (SI10)	I/F circuit	SI P.3-34

Title of signal	Selection 2 input of internal command speed			Related control mode	P S T F
Symbol	INTSPD2	Default assignment	30 (SI7)	I/F circuit	SI P.3-34

Title of signal	Selection 3 input of internal command speed			Related control mode	P S T F
Symbol	INTSPD3	Default assignment	28 (SI5)	I/F circuit	SI P.3-34

- Select one of 8 internal command speeds.
  <Relationship between Pr3.00 “Switching between internal and external speed setup” and internal command speed selection 1-3 and the speed command selected>.

Pr3.00	Selection 1 of internal command speed (INTSPD1)	Selection 2 of internal command speed (INTSPD2)	Selection 3 of internal command speed (INTSPD3)	Selection of speed command
1	OFF	OFF	No effect	1st speed
	ON	OFF		2nd speed
	OFF	ON		3rd speed
	ON	ON		4th speed
2	OFF	OFF	No effect	1st speed
	ON	OFF		2nd speed
	OFF	ON		3rd speed
	ON	ON		Analog speed command
3	The same as Pr3.00=1		OFF	1st to 4th speed
	OFF	OFF	ON	5th speed
	ON	OFF	ON	6th speed
	OFF	ON	ON	7th speed
	ON	ON	ON	8th speed

Caution Internal command speed switching pattern should be so arranged as shown below that single input signals are selected alternately. If 2 or more input signals are selected simultaneously, unspecified internal command speed may be advertently selected, whose setting value and acceleration/deceleration setting will cause unexpected operation.

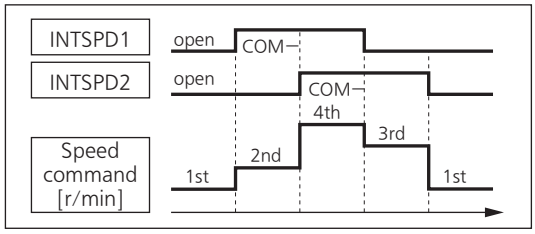

Example 1) When Pr3.00=1 or 2

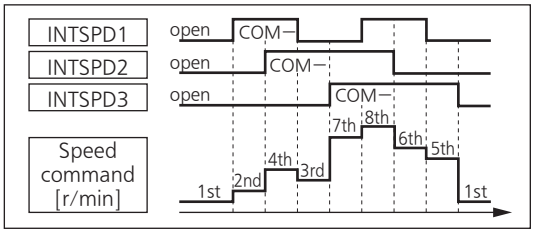

Example 2) When Pr3.00=3

Title of signal	Speed zero clamp input			Related control mode	P	S	T	F
Symbol	ZEROSPD	Default assignment	26 (SI3)	I/F circuit	SI	P.3-34		

- Set the speed command to 0.
- When using, set Pr3.15 "Speed zero clamp function selection" to a value other than 0.

Title of signal	Speed command sign input			Related control mode	P	S	T	F
Symbol	VC-SIGN	Default assignment	—	I/F circuit	SI	P.3-34		

- Specify the sign of speed command input at velocity control.
  Refer to P.4-31 "Pr3.01 Speed command rotational direction selection"

Title of signal	Torque command sign input			Related control mode	P	S	T	F
Symbol	TC-SIGN	Default assignment	—	I/F circuit	SI	P.3-34		

- Specify the sign of torque command input at torque control.

ON	Negative direction
OFF	Positive direction

Refer to P.4-35 "Pr3.18 Torque command direction selection"

Title of signal	Forced alarm input			Related control mode	P	S	T	F
Symbol	E-STOP	Default assignment	—	I/F circuit	SI	P.3-34		

- Generates Err87.0 "Forced alarm input error" .

Title of signal	Inertia ratio switching input			Related control mode	P	S	T	F
Symbol	J-SEL	Default assignment	—	I/F circuit	SI	P.3-34		

- Selects 1st inertia ratio or 2nd inertia ratio according to the inertia ratio select input (J-SEL).

Inertia ratio switching input (J-SEL)	Applicable inertia ratio
OFF	1st Inertia ratio (Pr0.04)
ON	2nd Inertia ratio (Pr6.12)

Refer to P.4-70 "Pr6.10 Function expansion setup"

Title of signal	Dynamic brake (DB) switch input			Related control mode	P	S	T	F
Symbol	DB-SEL	Default assignment	—	I/F circuit	SI	P.3-34		

- This signal is used to switch dynamic brake (DB) On/Off.
- Switching is only possible when main power supply Off is detected.

Note Only for position control type is not provided with analog input.

Input Signals (Analog Command)

Pin No.	14	Title of signal	AI1 input	Correspondence function
		Symbol	AI1	SPR, TRQR, SPL

Pin No.	16	Title of signal	AI2 input	Correspondence function
		Symbol	AI2	TRQR, P-ATL

Pin No.	18	Title of signal	AI3 input	Correspondence function
		Symbol	AI3	N-ATL

Function allocatable to Input Signals (Analog Command)

Title of signal	Positive direction Torque limit input	Related control mode	P	S	T	F
Symbol	P-ATL	I/F circuit	AI	P.3-35		

Title of signal	Negative direction Torque limit input	Related control mode	P	S	T	F
Symbol	N-ATL	I/F circuit	AI	P.3-35		

• Specify the torque limit for each direction value by the analog voltage.

Pr5.21	Positive direction Torque limit input (P-ATL)	Negative direction Torque limit input (N-ATL)	Positive direction Torque limit	Negative direction Torque limit
0	0 V to 10 V	− 10 V to 0 V	P-ATL	N-ATL
1	—		Set up through parameter. *1	
2				
3				
4	0 V to 10 V	0 V to 10 V	P-ATL	N-ATL
5	0 V to 10 V	No effect	P-ATL	
6	—		Setup by parameter *1	

*1 When specifying the torque limit value through the parameter, refer to P.4-58 Pr5.21 "Selection of torque limit"

Title of signal	Speed command input	Related control mode	P	S	T	F
Symbol	SPR	I/F circuit	AI	P.3-35		

Note Only for the position control type is not provided with analog input.

- Input the speed command in the form of analog voltage.
- The table below shows relationship between the combination of Pr3.00 "Switching between internal and external speed setup", Pr3.01 "Speed command direction selection", Pr3.03 "Speed command input inversion", analog speed command (SPR) of I/F connector and speed command sign selection (VC-SIGN) and the motor rotational direction; and the conversion graph of analog speed command input voltage to the speed command.

Pr3.00	Pr3.01	Pr3.03	Speed command input (SPR)	Speed command sign selection (VC-SIGN)	Motor rotational direction
0 (2)*	0	0	+Voltage (0 V to 10 V)	No effect	Positive direction
			−Voltage (−10 V to 0 V)	No effect	Negative direction
		1	+Voltage (0 V to 10 V)	No effect	Negative direction
			−Voltage (−10 V to 0 V)	No effect	Positive direction
	1	No effect	+Voltage (0 V to 10 V)	OFF	Positive direction
			−Voltage (−10 V to 0 V)		
			+Voltage (0 V to 10 V)	ON	Negative direction
			−Voltage (−10 V to 0 V)		

* When internal command speed select 1 and 2 are ON.

Title of signal	Torque command input	Related control mode	P S **T** F
Symbol	TRQR	I/F circuit	AI P.3-35

- Input the torque command in the form of analog voltage.
  When Pr3.17 "Torque command selection" = 0, pin No.14
  When Pr3.17 "Torque command selection" = 1, pin No.16

Pr3.17	Pr3.18	Pr3.20	Torque command input (TRQR)	Torque command sign selection (TC-SIGN)	Motor rotational direction
0	0	0	+Voltage (0 V to 10 V)	No effect	Positive direction
			−Voltage (−10 V to 0 V)	No effect	Negative direction
		1	+Voltage (0 V to 10 V)	No effect	Negative direction
			−Voltage (−10 V to 0 V)	No effect	Positive direction
	1	No effect	+Voltage (0 V to 10 V)	OFF	Positive direction
			−Voltage (−10 V to 0 V)		
			+Voltage (0 V to 10 V)	ON	Negative direction
			−Voltage (−10 V to 0 V)		

Title of signal	Speed limit input	Related control mode	P S **T** F
Symbol	SPL	I/F circuit	AI P.3-35

- When setting Pr3.17 "Torque command selection" to 1, input the speed limit value in the form of analog voltage.

Output Signals (Common) and Their Functions

Control output signal of desired function can be assigned to I/F connector. Logic of the output pin cannot be changed.

				Applicable parameter	Default parameter setting ( ): decimal notation	Default Setup		
						Position/ Full-closed control	Verocity control	Torque control
						Signal	Signal	Signal
Pin No.	10 11	Title of signal	SO1 output	Pr4.10	00030303h (197379)	BRK-OFF	BRK-OFF	BRK-OFF
		Symbol	Pin No.10: SO1− Pin No.11: SO1+					
Pin No.	34 35	Title of signal	SO2 output	Pr4.11	00020202h (131586)	S-RDY	S-RDY	S-RDY
		Symbol	Pin No.34: SO2− Pin No.35: SO2+					
Pin No.	36 37	Title of signal	SO3 output	Pr4.12	00010101h (65793)	ALM	ALM	ALM
		Symbol	Pin No.36: SO3− Pin No.37: SO3+					
Pin No.	38 39	Title of signal	SO4 output	Pr4.13	00050504h (328964)	INP	AT-SPEED	AT-SPEED
		Symbol	Pin No.38: SO4− Pin No.39: SO4+					
Pin No.	12	Title of signal	SO5 output	Pr4.14	00070707h (460551)	ZSP	ZSP	ZSP
		Symbol	SO5					
Pin No.	40	Title of signal	SO6 output	Pr4.15	00060606h (394758)	TLC	TLC	TLC
		Symbol	SO6					

Note
- The function is changed by the setting of parameter. For details, refer to P.4-41. See "Functions assignable to control output" as shown below.

[—]: No function assigned

Related page P.3-57

Function allocatable to control input

Title of signal	Servo-Alarm output			Related control mode	P	S	T	F
Symbol	ALM	Default assignment	36, 37 (SO3)	I/F circuit	SO	P.3-36		

- This signal shows that the driver is in alarm status..
- Output transistor turns ON when the driver is at normal status, and turns OFF at alarm status.

Title of signal	Servo-Ready output			Related control mode	P	S	T	F
Symbol	S-RDY	Default assignment	34, 35 (SO2)	I/F circuit	SO	P.3-36		

- This signal shows that the driver is ready to be activated.
- Output transistor turns ON when both control and main power are ON but not at alarm status.

Title of signal	External brake release signal			Related control mode	P	S	T	F
Symbol	BRK-OFF	Default assignment	10, 11 (SO1)	I/F circuit	SO	P.3-36		

- Feeds out the timing signal which activates the holding brake of the motor.
- Turns the output transistor ON at the release timing of the holding brake.

Title of signal	Positioning complete			Related control mode	P	S	T	F
Symbol	INP	Default assignment	38, 39 (SO4)	I/F circuit	SO	P.3-36		

Title of signal	Positioning complete 2			Related control mode	P	S	T	F
Symbol	INP2	Default assignment	—	I/F circuit	SO	P.3-36		

- Outputs the positioning complete signal/positioning complete signal 2.
- Turns ON the output transistor upon completion of positioning.

Title of signal	Speed arrival output			Related control mode	P	S	T	F
Symbol	AT-SPEED	Default assignment	38, 39 (SO4)	I/F circuit	SO	P.3-36		

- Outputs the speed arrival signal.
- Turns ON the output transistor upon arrive of speed.

Title of signal	Torque in-limit signal output			Related control mode	P	S	T	F
Symbol	TLC	Default assignment	40 (SO6)	I/F circuit	SO	P.3-36		

- Outputs the torque in-limit signal.
- Turns ON the output transistor upon limit of torque.

Title of signal	Zero-speed detection output signal			Related control mode	P	S	T	F
Symbol	ZSP	Default assignment	12 (SO5)	I/F circuit	SO	P.3-36		

- Outputs the zero-speed detection signal.
- Turns ON the output transistor upon detection of Zero-speed.

Title of signal	Speed coincidence output			Related control mode	P	S	T	F
Symbol	V-COIN	Default assignment	—	I/F circuit	SO	P.3-36		

- Outputs the speed coincidence signal.
- Turns ON the output transistor upon coincidence of speed.

Title of signal	Alarm output 1			Related control mode	P	S	T	F
Symbol	WARN1	Default assignment	—	I/F circuit	SO	P.3-36		

- Outputs the warning output signal set to Pr4.40 “Warning output select 1” .
- Turns ON the output transistor upon occurrence of warning condition.

Title of signal	Alarm output 2			Related control mode	P	S	T	F
Symbol	WARN2	Default assignment	—	I/F circuit	SO	P.3-36		

- Outputs the warning output signal set to Pr4.41 "Warning output select 2" .
- Turns ON the output transistor upon occurrence of warning condition.

- Selection of alarm 1 output and 2 output

Alarm No.	Alarm	Content	Pr6.27 *1	Pr4.40/ Pr4.41*2	Pr6.38/ Pr6.39 Corresponding bit *3
A0	Overload protection	Load factor is 85 % or more the protection level.	○	1	Pr6.38 bit7
A1	Over-regeneration alarm	Regenerative load factor is 85 % or more the protection level.	○	2	Pr6.38 bit5
A2	Battery alarm*8	Battery voltage is 3.2 V or lower.	Fixed at no time limit.	3	Pr6.38 bit0
A3	Fan alarm	Fan has stopped for 1 sec.*4	○	4	Pr6.38 bit6
A4	Encoder communication alarm	The number of successive encoder communication errors exceeds the specified value.	○	5	Pr6.38 bit4
A5	Encoder overheat alarm*4	Encoder temperature has exceeded the specified value.*7	○	6	Pr6.38 bit3
A6	Oscillation detection alarm	Oscillation or vibration is detected.	○	7	Pr6.38 bit9
A7	Lifetime detection alarm	The life expectancy of capacity or fan becomes shorter than the specified time.	Fixed at no time limit.	8	Pr6.38 bit2
A8	External scale error alarm	The feedback scale detects the alarm.	○	9	Pr6.38 bit8
A9	External scale communication alarm	The number of successive feedback scale communication errors exceeds the specified value.	○	10	Pr6.38 bit10
AC	Deterioration diagnosis warning*6	Load characteristic estimates and torque command under constant speed has exceeded the set range.	○	22	Pr6.39 bit7
C3	Main power off warning	In case that Pr7.14 (Detection time of main power off warning) is 10 to 1999, the mains power between L1 and L3 has stopped instantaneously for more than the time prescribed in Pr7.14.	○	14	Pr6.38 bit12

*1 The "○" means that a time in the range 1 s to 10 s or no time limit can be selected through Pr6.27 "Warning latching time". Note that the battery warning and the end of life warning have no time limit.
*2 Select the warning output signal 1 (WARN1) or warning output signal 2 (WARN2) through Pr4.40 "Warning output select 1" or Pr4.41 "Warning output select 2". When the set value is 0, all warnings are ORed before being output. Do not set to any value other than those specified in the table above.
*3 Each warning detection can be disabled by Pr6.38 "Warning mask setup" and Pr6.39 "Warning mask setting 2." The corresponding bits are indicated in the table. The warning detection will be disabled by bit=1.
*4 The upper fan on the H-frame driver stops during servo OFF to save energy. This is normal and no fan alarm is displayed.
*5 Warnings can be cleared by using the alarm clear. While the alarm clear input (A-CLR) is kept ON, the all existing warnings are always cleared.
*6 Invalidated when Pr6.97 "Function expansion setting 3" bit1 = 0.
*7 Take measures such as lowering the ambient temperature and reducing the load, or re-examining the heat dissi-pation.
*8 In the case of Pr0.15 = 1 (incremental mode), when using the battery-powered absolute encoder, or when using the battery-less absolute encoder, no battery warning is detected.

Title of signal	Positional command ON/OFF output			Related control mode	P	S	T	F
Symbol	P-CMD	Default assignment	—	I/F circuit	SO	P.3-36		
• Turns on output transistor with positional command applied.								

Title of signal	Speed in-limit output			Related control mode	P	S	T	F
Symbol	V-LIMIT	Default assignment	—	I/F circuit	SO	P.3-36		
• Turns on output transistor when the speed is limited by torque controlling function.								

Title of signal	Alarm attribute output			Related control mode	P	S	T	F
Symbol	ALM-ATB	Default assignment	—	I/F circuit	SO	P.3-36		
• Turns on output transistor when an alarm that can be cleared generates.								

Title of signal	Speed command ON/OFF output			Related control mode	P	S	T	F
Symbol	V-CMD	Default assignment	—	I/F circuit	SO	P.3-36		
• Turns on output transistor when the speed command is applied while the speed is controlled.								

Title of signal	Servo on status output			Related control mode	P	S	T	F
Symbol	SRV-ST	Default assignment	—	I/F circuit	SO	P.3-36		
• Turns on output transistor when servo is on.								

Output Signals (Pulse Train) and Their Functions

Pin No.	21 22	Title of signal	A-phase output/Position compare output 1	Related control mode	P	S	T	F
		Symbol	Pin No.21: OA+/OCMP1+ Pin No.22: OA−/OCMP1−	I/F circuit	PO1	P.3-36		
Pin No.	48 49	Title of signal	B-phase output/Position compare output 2	Related control mode	P	S	T	F
		Symbol	Pin No.48: OB+/OCMP2+ Pin No.49: OB−/OCMP2−	I/F circuit	PO1	P.3-36		
Pin No.	23 24	Title of signal	Z-phase output/Position compare output 3	Related control mode	P	S	T	F
		Symbol	Pin No.23: OZ+/OCMP3+ Pin No.24: OZ−/OCMP3−	I/F circuit	PO1	P.3-36		

- Feeds out the divided encoder signal or feedback scale signal (A, B, Z-phase) in differential. (equivalent to RS422)
- Ground for line driver of output circuit is connected to signal ground (GND) and is not insulated.
- Max. output frequency is 4 Mpulse/s (after quadrupled)
- Can be used as position compare output, by setting bits 0 to 2 of Pr4.47 “Pulse output select” to 1.

Pin No.	19	Title of signal	Z-phase output/Position compare output 4	Related control mode	P	S	T	F
		Symbol	CZ/OCMP4	I/F circuit	PO2	P.3-37		

- Open collector output of Z-phase signal
- The emitter side of the transistor of the output circuit is connected to the signal ground (GND) and is not insulated.
- When using the CZ signal, isolate it from external noise.
- Note that the logic of Z phase open collector output (CZ) is a reversal of the line driver output (OZ) logic.

Note

- When the output source is the encoder
- If the encoder resolution $\times \frac{Pr0.11}{Pr5.03}$ is multiple of 4, Z-phase will be fed out synchronizing with A-phase. In other case, the Z-phase width will be equal to the encoder resolution, and will not synchronize with A-phase because of narrower width than that of A-phase.

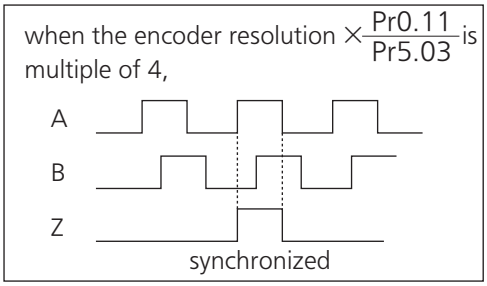

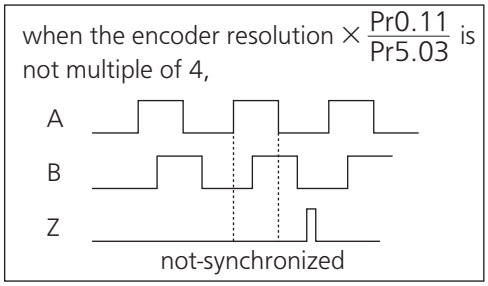

Pin No.	—	Title of signal	Deterioration diagnosis velocity output	Related control mode	P	S	T	F
		Symbol	V-DIAG	I/F circuit	PO2	P.3-37		

- The output transistor is turned ON when motor velocity of Pr5.75 (Deterioration diagnosis velocity setting) is within the range of PR4.35 (velocity concurrence width).
- There is a hysteresis of 10 r/min in concurrence judgment for deterioration diagnosis velocity.

Pin No.	—	Title of signal	Position compare output	Related control mode	P	S	T	F
		Symbol	CMP-OUT	I/F circuit	PO2	P.3-37		

- The output transistor is turned ON when the actual position has passed the position set by the parameter.
  Setting for all control modes is required when using the position compare output, (CMP-OUT). In case setting is made only to one or two control modes, Err33.4 “Output function number error 1 protection” or Err33.5 “Output function number error 2 protection” will occur.

Output Signals (Analog) and Their Functions

Pin No.	42	Title of signal	Analog monitor output 2	Related control mode	P	S	T	F
		Symbol	IM	I/F circuit	AO P.3-37			

- Definition of the output signal varies with the output of Pr4.18 (analog monitor 2 type).
- The output signal is identical to the analog monitor 2 on the front monitor.
- For output setting, refer to P.4-42 "Details of parameter"

Pin No.	43	Title of signal	Analog monitor output 1	Related control mode	P	S	T	F
		Symbol	SP	I/F circuit	AO P.3-37			

- Definition of the output signal varies with the output of Pr4.16 (analog monitor 1 type).
- The output signal is identical to the analog monitor 1 on the front monitor.
- For output setting, refer to P.4-42 "Details of parameter"

Output Signals (Others) and Their Functions

Pin No.	13, 15 17, 25	Title of signal	Signal ground	Related control mode	P	S	T	F
		Symbol	GND	I/F circuit	—			

- Signal ground
- This output is insulated from the control signal power (COM−) inside of the driver.

Pin No.	50	Title of signal	Frame ground	Related control mode	P	S	T	F
		Symbol	FG	I/F circuit	—			

- This output is connected to the earth terminal inside of the driver.

5. IF Monitor Settings

How to Assign Various I/O Functions to the I/F

Control Input Settings

Title of signal	Connector X4 Pin No.	Parameter No.
SI1 input selection	8	Pr4.00
SI2 input selection	9	Pr4.01
SI3 input selection	26	Pr4.02
SI4 input selection	27	Pr4.03
SI5 input selection	28	Pr4.04
SI6 input selection	29	Pr4.05
SI7 input selection	30	Pr4.06
SI8 input selection	31	Pr4.07
SI9 input selection	32	Pr4.08
SI10 input selection	33	Pr4.09

These parameters shall be set by using hexadecimal numbers. Setting shall be made for each control mode as shown in examples below.

00 ————▲▲ h: Position/Full-closed control
00 ——＊＊—— h: Speed control
00 ■■———— h: Torque control

Set an appropriate function number in place of "■■" , "＊＊" and "▲▲" . For the function number, see the table on the below.

Title	Symbol	Setup value	
		Normal Open	Normal Colse
Invalid	—	00h	Do not setup.
Positive direction over-travel inhibition input	POT	01h	81h
Negative direction over-travel inhibition input	NOT	02h	82h
Servo-ON input *1	SRV-ON	03h	83h
Alarm clear input	A-CLR	04h	Do not setup.
Control mode switching input *2	C-MODE	05h	85h
Gain switching input	GAIN	06h	86h
Deviation counter clear input *3	CL	07h	Do not setup.
Command pulse inhibition input *4	INH	08h	88h
Torque limit switching input	TL-SEL	09h	89h
Damping control switching input 1	VS-SEL1	0Ah	8Ah
Damping control switching input 2	VS-SEL2	0Bh	8Bh
Electronic gear switching input 1	DIV1	0Ch	8Ch
Electronic gear switching input 2	DIV2	0Dh	8Dh
Selection 1 input of internal command speed	INTSPD1	0Eh	8Eh
Selection 2 input of internal command speed	INTSPD2	0Fh	8Fh
Selection 3 input of internal command speed	INTSPD3	10h	90h
Speed zero clamp input	ZEROSPD	11h	91h
Speed command sign input	VC-SIGN	12h	92h
Torque command sign input	TC-SIGN	13h	93h
Forced alarm input	E-STOP	14h	94h
Inertia ratio switching input	J-SEL	15h	95h
Dynamic brake (DB) switch input	DB-SEL	16h	Do not setup.

(e.g. 1) Parameter setting

00 82 82 82 h (Hexadecimal numbers)

- Position/ Full-closed Control (Negative direction over-travel inhibition input; Normal Close)
- Velocity Control (Negative direction over-travel inhibition input; Normal Close)
- Torque Control (Negative direction over-travel inhibition input; Normal Close)

Convert to a decimal number

8553090 ← Enter this value to the relevant parameter.

(e.g. 2) Parameter setting

00 ■■ ＊＊ ▲▲ h (Hexadecimal numbers)

- Position/ Full-closed Control (Damping control switching input 1; Normal Open)
- Velocity Control (Speed zero clamp input; Normal Close)
- Torque Control (Speed zero clamp input; Normal Close)

Convert to a decimal number

[ ] ← Enter this value to the relevant parameter.

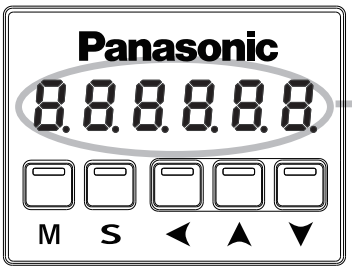

The front panel display is in decimal (six digits).
For setting functions and parameters, hexadecimal and decimal numbers should be used respectively.

The expression of "00■■ ∗∗ ▲▲h" indicates that the number is hexadecimal.

The SI1 input (connector X4, pin No. 8) means that the negative direction over-travel inhibition input is set to b-contact as a factory default.
For using the device in the position or full-closed control mode, the negative direction over-travel inhibition input is set to b-contact by setting "8" and "2" in the seventh and eighth digits from the left respectively. The settings in the first to sixth digits from the left do not matter.
For the hexadecimal value "00000082h" or simply "82h", enter "130" (decimal) to the parameter Pr4.00.
To make multiple settings, enter the function number in the first eight digits from the left and then enter a parameter in a decimal number after converting it from a hexadecimal number. An example of this is shown in example 1 (the case on the left side).
Similarly, the SI3 input (connector X4, pin No. 26) has a function of damping control switching input 1 as a default when used in the position control mode.
Also, if the speed control is used, it is set to the function of speed zero clamp input.
Therefore, in order to set it to the damping control switching input in the position control mode, enter the value of "10" (decimal) in the parameter Pr4.02 meaning the hexadecimal number "0Ah", or "Ah".
To change the speed zero clamp of pin No. 26 from b-contact to a-contact in the speed control mode, enter the decimal number of "4352" in the parameter Pr4.02 meaning the hexadecimal number of "00001100h", or "1100h".

Caution

- Do not setup to a value other than that specified in the table.
- Do not assign specific function to 2 or more signals. Duplicated assignment will cause Err33.0 I/F input multiple assignment error 1 or Err33.1 I/F input multiple assignment error 2.

*1 Servo-on input signal (SRV-ON) must be used to enable servo-on.
*2 When using control mode switching input (C-MODE), set the signal to all control modes. If the signal is set to only 1 or 2 control modes, Err33.2 I/F input function number error 1 or Err33.3 I/F input function number error 2 will be generated.
- The control input pin set to invalid state does not affect any operation.
- Function (servo-on input, alarm clear, etc.) to be used in multiple control modes must be assigned to the same pin with correct logical arrangement. Incorrect setting will cause Err33.0 I/F input multiple assignment error 1 or Err33.1 I/F input multiple assignment error 2.

*3 Deviation counter clear input (CL) can be assigned only to SI7 input. Wrong assignment will cause Err33.6 Counter clear assignment error.
*4 Command pulse inhibit input (INH) can be assigned only to SI10 input. Wrong assignment will cause Err33.7 Command pulse input inhibit input.

Note

- Input circuit, refer to P.3-34 and function, refer to P.3-39 to P.3-41.

Related page P.4-39 to P.4-41

Control Output Settings

Title of signal	Connector X4 Pin No.	Parameter No.
SO1 output	10, 11	Pr4.10
SO2 output	34, 35	Pr4.11
SO3 output	36, 37	Pr4.12
SO4 output	38, 39	Pr4.13
SO5 output	12	Pr4.14
SO6 output	40	Pr4.15

Setup value	Title	Symbol
00h	Invalid	–
01h	Servo alarm output	ALM
02h	Servo-Ready output	S-RDY
03h	External brake release signal	BRK-OFF
04h	Positioning complete output	INP
05h	At-speed output	AT-SPEED
06h	Torque in-limit signal output	TLC
07h	Zero-speed detection output signal	ZSP
08h	Speed coincidence output	V-COIN
09h	Alarm output 1	WARN1
0Ah	Alarm output 2	WARN2
0Bh	Positional command ON/OFF output	P-CMD
0Ch	Positioning complete 2	INP2
0Dh	Speed in-limit output	V-LIMIT
0Eh	Alarm attribute output	ALM-ATB
0Fh	Speed command ON/OFF output	V-CMD
10h	Servo on status output	SRV-ST
14h	Position compare output	CMD-OUT
15h	Deterioration diagnosis velocity output	V-DIAG

These parameters shall be set by using hexadecimal numbers. Setting shall be made for each control mode as shown in examples below.

00 ————▲▲ h: Position/Full-closed control
00 ——＊＊—— h: Speed control
00 ■■———— h: Torque control

Set an appropriate function number in place of "■■" , "＊＊" and "▲▲" . For the function number, see the table on the right.

(e.g. 1) Parameter setting

00 03 03 03 h (Hexadecimal numbers)

- Position/ Full-closed Control (External brake release signal)
- Velocity Control (External brake release signal)
- Torque Control (External brake release signal)

Convert to a decimal number

197379 ← Enter this value to the relevant parameter.

(e.g. 2) Parameter setting

00 05 05 04 h (Hexadecimal numbers)

- Position/ Full-closed Control (Positioning complete)
- Velocity Control (Speed arrival output)
- Torque Control (Speed zero clamp input; Normal Close)

Convert to a decimal number

328964 ← Enter this value to the relevant parameter.

- Same function can be assigned to 2 or more output signals.
- Control output pin set to invalid always has the output transistor turned OFF.
- Do not change the setup value shown in the table.

Caution *1 Note that the setup values are displayed in decimal on the front panel.

Note • SO Output circuit, refer to P.3-36, 37 and function, refer to P.3-49 to P.3-52.

Related page P.4-41 to P.4-42

MEMO

4. Setup

1. Details of parameter

List of Parameters 4-2
[Class 0] Basic setting 4-7
[Class 1] Gain adjustment 4-17
[Class 2] Damping control 4-24
[Class 3] Velocity/ Torque/ Full-closed control 4-31
[Class 4] I/F monitor setting 4-39
[Class 5] Enhancing setting 4-52
[Class 6] Special setting 4-69
[Class 7] Special setting 4-85
[Class 8] For manufacturer use 4-87
[Class 9] For manufacturer use 4-87
[Class 15] For manufacturer use 4-87

2.Trial Run (JOG run)

Inspection Before Trial Run 4-88
Trial Run by Connecting the Connector X4 4-89
Setup of Motor Rotational Speed and Input Pulse Frequency ... 4-92

1. Details of parameter

List of Parameters

- A parameter is designated as follows:

  Class — Pr0.00 — Parameter No.

- Definition of symbols under "Related mode" -
  P: position control, S: velocity control,
  T: torque control, F: full closed control
- Basic Type, General communication can not use part prameter.

Parametr No. Class	No.	Title		Related Control Mode P	S	T	F	Detail page
[Class 0] Basic setting	00	Rotational direction setup		○	○	○	○	4-7
	01	Control mode setup		○	○	○	○	
	02	Real-time auto-gain tuning	setup	○	○	○	○	4-8
	03		Selection of machine stiffness	○	○	○	○	4-9
	04	Inertia ratio		○	○	○	○	4-10
	05	Command pulse	input selection	○	–	–	○	
	06		otational direction setup	○	–	–	○	4-11
	07		input mode setup	○	–	–	○	
	08	Command pulse counts per one motor revolution		○	–	–	–	4-12
	09	1st numerator of electronic gear		○	–	–	○	
	10	Denominator of electronic gear		○	–	–	○	
	11	Output pulse counts per one motor revolution		○	○	○	○	4-13
	12	Reversal of pulse output logic		○	○	○	○	4-15
	13	1st torque limit		○	○	○	○	
	14	Position deviation excess setup		○	–	–	○	
	15	Absolute encoder setup		○	○	○	○	
	16	External regenerative resistor setup		○	○	○	○	4-16
	17	Load factor of external regenerative resistor selection		○	○	○	○	
	18	For manufacturer's use		–	–	–	–	

Class	No.	Title		P	S	T	F	Detail page
[Class 1] Gain adjustment	00	1st	gain of position loop	○	–	–	○	4-17
	01		gain of velocity loop	○	○	○	○	
	02		time constant of velocity loop integration	○	○	○	○	
	03		filter of speed detection	○	○	○	○	
	04		time constant of torque filter	○	○	○	○	
	05	2nd	gain of position loop	○	–	–	○	4-18
	06		gain of velocity loop	○	○	○	○	
	07		time constant of velocity loop integration	○	○	○	○	
	08		filter of speed detection	○	○	○	○	
	09		time constant of torque filter	○	○	○	○	
	10	Velocity feed-forward gain		○	–	–	○	
	11	Velocity feed-forward filter		○	–	–	○	
	12	Torque feed forward	gain	○	○	–	○	4-19
	13		filter	○	○	–	○	
	14	2nd gain setup		○	○	○	○	
	15	Position control switching	mode	○	–	–	○	4-20
	16		delay time	○	–	–	○	4-21
	17		level	○	–	–	○	
	18		hysteresis	○	–	–	○	
	19	Position gain switching time		○	–	–	○	
	20	Velocity control switching mode		–	○	–	–	4-22
	21	Velocity control switching delay time		–	○	–	–	
	22	Velocity control switching level		–	○	–	–	
	23	Velocity control switching hysteresis		–	○	–	–	4-23
	24	Torque control switching mode		–	–	○	–	
	25	Torque control switching delay time		–	–	○	–	
	26	Torque control switching level		–	–	○	–	
	27	Torque control switching hysteresis		–	–	○	–	

Parametr No. Class	No.	Title	Related Control Mode P	S	T	F	Detail page
	28	For manufacturer's use	–	–	–	–	4-23
	29	For manufacturer's use	–	–	–	–	
	30	For manufacturer's use	–	–	–	–	
	31	For manufacturer's use	–	–	–	–	
	32	For manufacturer's use	–	–	–	–	
	33	For manufacturer's use	–	–	–	–	
	34	For manufacturer's use	–	–	–	–	
	35	For manufacturer's use	–	–	–	–	
	36	For manufacturer's use	–	–	–	–	
	37	For manufacturer's use	–	–	–	–	
	38	For manufacturer's use	–	–	–	–	
	39	For manufacturer's use	–	–	–	–	
	40	For manufacturer's use	–	–	–	–	
	41	For manufacturer's use	–	–	–	–	
	42	For manufacturer's use	–	–	–	–	
	43	For manufacturer's use	–	–	–	–	
	44	For manufacturer's use	–	–	–	–	
	45	For manufacturer's use	–	–	–	–	
	46	For manufacturer's use	–	–	–	–	
	47	For manufacturer's use	–	–	–	–	
	48	For manufacturer's use	–	–	–	–	
	49	For manufacturer's use	–	–	–	–	
	50	For manufacturer's use	–	–	–	–	
	51	For manufacturer's use	–	–	–	–	
	52	For manufacturer's use	–	–	–	–	
	53	For manufacturer's use	–	–	–	–	
	54	For manufacturer's use	–	–	–	–	
	55	For manufacturer's use	–	–	–	–	
	56	For manufacturer's use	–	–	–	–	
	57	For manufacturer's use	–	–	–	–	
	58	For manufacturer's use	–	–	–	–	
	59	For manufacturer's use	–	–	–	–	
	60	For manufacturer's use	–	–	–	–	
	61	For manufacturer's use	–	–	–	–	
	62	For manufacturer's use	–	–	–	–	
	63	For manufacturer's use	–	–	–	–	
	64	For manufacturer's use	–	–	–	–	
	65	For manufacturer's use	–	–	–	–	
	66	For manufacturer's use	–	–	–	–	
	67	For manufacturer's use	–	–	–	–	
	68	For manufacturer's use	–	–	–	–	
	69	For manufacturer's use	–	–	–	–	
	70	For manufacturer's use	–	–	–	–	
	71	For manufacturer's use	–	–	–	–	
	72	For manufacturer's use	–	–	–	–	
	73	For manufacturer's use	–	–	–	–	
	74	For manufacturer's use	–	–	–	–	
	75	For manufacturer's use	–	–	–	–	
	76	For manufacturer's use	–	–	–	–	
	77	For manufacturer's use	–	–	–	–	
	78	For manufacturer's use	–	–	–	–	

Class	No.	Title		P	S	T	F	Detail page
[Class 2] Damping control	00	Adaptive filter mode setup		○	○	–	○	4-24
	01	1st notch	frequency	○	○	○	○	
	02		width selection	○	○	○	○	
	03		depth selection	○	○	○	○	
	04	2nd notch	frequency	○	○	○	○	
	05		width selection	○	○	○	○	4-25
	06		depth selection	○	○	○	○	
	07	3rd notch	frequency	○	○	○	○	

Parametr No. Class	No.	Title		Related Control Mode P	S	T	F	Detail page
	08	3rd notch	width selection	○	○	○	○	4-25
	09		depth selection	○	○	○	○	
	10	4th notch	frequency	○	○	○	○	
	11		width selection	○	○	○	○	
	12		depth selection	○	○	○	○	4-26
	13	Selection of damping filter switching		○	–	–	○	
	14	1st damping	frequency	○	–	–	○	4-27
	15		filter setup	○	–	–	○	
	16	2nd damping	frequency	○	–	–	○	
	17		filter setup	○	–	–	○	
	18	3rd damping	frequency	○	–	–	○	
	19		filter setup	○	–	–	○	
	20	4th damping frequency		○	–	–	○	
	21	4th damping filter setting		○	–	–	○	
	22	command smoothing filter		○	○	–	○	4-28
	23	command FIR filter		○	–	–	○	4-29
	24	5th notch	frequency	○	○	○	○	
	25		width selection	○	○	○	○	
	26		depth selection	○	○	○	○	4-30
	27	1st vibration control width setting		○	–	–	○	
	28	2st vibration control width setting		○	–	–	○	
	29	3st vibration control width setting		○	–	–	○	
	30	4st vibration control width setting		○	–	–	○	
	31	For manufacturer's use		–	–	–	–	
	32	For manufacturer's use		–	–	–	–	
	33	For manufacturer's use		–	–	–	–	
	34	For manufacturer's use		–	–	–	–	
	35	For manufacturer's use		–	–	–	–	
	36	For manufacturer's use		–	–	–	–	
	37	For manufacturer's use		–	–	–	–	
[Class 3] Velocity/ Torque/ Full-closed control	00	Speed setup, Internal/External switching		–	○	–	–	4-31
	01	Speed command	rotational direction selection	–	○	–	–	
	02		input gain	–	○	○	–	4-32
	03		reversal input	–	○	–	–	
	04	Speed setup	1st	–	○	–	–	4-33
	05		2nd	–	○	–	–	
	06		3rd	–	○	–	–	
	07		4th	–	○	–	–	
	08		5th	–	○	–	–	
	09		6th	–	○	–	–	
	10		7th	–	○	–	–	
	11		8th	–	○	–	–	
	12	Acceleration time setting		–	○	–	–	
	13	Deceleration time setting		–	○	–	–	
	14	Sigmoid acceleration/ deceleration time setup		–	○	–	–	4-34
	15	Speed zero clamp function selection		–	○	○	–	
	16	Zero clamp level speed setting		–	○	○	–	
	17	Torque command selection		–	–	○	–	4-35
	18	Torque command direction designation selection		–	–	○	–	
	19	Torque commandinput gain		–	–	○	–	
[Class 3] Velocity/ Torque/ Full-closed control	20	Torque command input reversal		–	–	○	–	
	21	Speed limit value 1		–	–	○	–	4-36
	22	Speed limit value 2		–	–	○	–	
	23	External scale	selection	–	–	–	○	
	24		numerator of division	–	–	–	○	4-37
	25		denominator of division	–	–	–	○	
	26		reversal of direction	–	–	–	○	
	27		Z phase disconnection detection disable	–	–	–	○	
	28	Hybrid deviation excess setting		–	–	–	○	
	29	Hybrid deviation clear setting		–	–	–	○	4-38

Parametr No. Class	No.	Title		Related Control Mode P	S	T	F	Detail page
X[Class 4] I/F monitor setting	00	Input selection	SI1 (Pin No.8)	○	○	○	○	4-39
	01		SI2 (Pin No.9)	○	○	○	○	4-40
	02		SI3 (Pin No.26)	○	○	○	○	
	03		SI4 (Pin No.27)	○	○	○	○	
	04		SI5 (Pin No.28)	○	○	○	○	
	05		SI6 (Pin No.29)	○	○	○	○	
	06		SI7 (Pin No.30)	○	○	○	○	
	07		SI8 (Pin No.31)	○	○	○	○	
	08		SI9 (Pin No.32)	○	○	○	○	
	09		SI10 (Pin No.33)	○	○	○	○	
	10	Output selection	SO1 (Pin No.10, 11)	○	○	○	○	4-41
	11		SO2 (Pin No.34, 35)	○	○	○	○	
	12		SO3 (Pin No.36, 37)	○	○	○	○	
	13		SO4 (Pin No.38, 39)	○	○	○	○	
	14		SO5 (Pin No.12)	○	○	○	○	
	15		SO6 (Pin No.40)	○	○	○	○	
	16	Analog monitor 1	type	○	○	○	○	4-42
	17		output gain	○	○	○	○	
	18	Analog monitor 2	type	○	○	○	○	
	19		output gain	○	○	○	○	
	20	For manufacturer use		–	–	–	–	
	21	Analog monitor output setup		○	○	○	○	4-44
	22	Analog input 1 (AI1)	offset setup	○	○	○	○	
	23		filter	○	○	○	○	
	24		overvoltage setup	○	○	○	○	
	25	Analog input 2 (AI2)	offset setup	○	○	○	○	
	26		filter	○	○	○	○	
	27		overvoltage setup	○	○	○	○	
	28	Analog input 3 (AI3)	offset setup	○	○	○	○	
	29		filter	○	○	○	○	4-45
	30		overvoltage setup	○	○	○	○	
	31	Positioning completion range		○	–	–	○	
	32	Positioning completion output setting		○	–	–	○	
	33	INP hold time		○	–	–	○	4-46
	34	Zero-speed		○	○	○	○	
	35	Speed coincidence range		–	○	○	–	
	36	At-speed (Speed arrival)		–	○	○	–	4-47
	37	Mechanical brake action in stop		○	○	○	○	
	38	Mechanical brake action in motion		○	○	○	○	
	39	Mechanical brake action at running setup		○	○	○	○	4-48
	40	Selection of alarm output	1	○	○	○	○	
	41		2	○	○	○	○	
	42	2nd Positioning complete (In-position) range		○	–	–	○	
	44	Position compare output pulse width setting		○	–	–	○	4-49
	45	Position compare output polarity select		○	–	–	○	
	47	Pulse output select		○	–	–	○	
	48	Position compare value 1		○	–	–	○	
	49	Position compare value 2		○	–	–	○	4-50
[Class 4] I/F monitor setting	50	Position compare value 3		○	–	–	○	
	51	Position compare value 4		○	–	–	○	
	52	Position compare value 5		○	–	–	○	
	53	Position compare value 6		○	–	–	○	
	54	Position compare value 7		○	–	–	○	
	55	Position compare value 8		○	–	–	○	
	56	Position compare output delay compensation amount		○	–	–	○	
	57	Position compare output assignment setting		○	–	–	○	4-51

Parametr No. Class	No.	Title	Related Control Mode P	S	T	F	Detail page
[Class 5] Enhancing setting	00	2nd numerator of electronic gear	○	—	—	○	4-52
	01	3rd numerator of electronic gear	○	—	—	○	
	02	4th numerator of electronic gear	○	—	—	○	
	03	Denominator of pulse output division	○	○	○	○	
	04	Over-travel inhibit input setup	○	○	○	○	
	05	Sequence at over-travel inhibit	○	○	○	○	4-53
	06	Sequence at Servo-Off	○	○	○	○	4-54
	07	main power OFF sequence	○	○	○	○	
	08	main power OFF LV trip selection	○	○	○	○	4-55
	09	main power OFF detection time	○	○	○	○	
	10	Sequence at alarm	○	○	○	○	
	11	Torque setup for emergency stop	○	○	○	○	4-56
	12	Over-load level setup	○	○	○	○	
	13	Over-speed level setup	○	○	○	○	
	14	Motor working range setup	○	—	—	○	
	15	I/F reading filter	○	○	○	○	
	16	Alarm clear input setup	○	○	○	○	
	17	Counter clear input mode	○	—	—	○	4-57
	18	Command pulse prohibition input (INH) disable	○	—	—	○	
	19	Command pulse prohibition input (INH) read setting	○	—	—	○	
	20	Position setup unit select	○	—	—	○	4-58
	21	Selection of torque limit	○	○	—	○	
	22	2nd torque limit	○	○	—	○	
	23	Torque limit switching setup 1	○	○	—	○	
	24	Torque limit switching setup 2	○	○	—	○	4-59
	25	External input positive direction torque limit	○	○	—	○	
	26	External input negative direction torque limit	○	○	—	○	
	27	Input gain of analog torque limit	○	○	—	○	
	28	LED initial status	○	○	○	○	4-60
	29	RS232 baud rate setup	○	○	○	○	
	30	RS485 baud rate setup	○	○	○	○	4-61
	31	Axis address	○	○	○	○	
	32	Command pulse input maximum setup	○	—	—	○	
	33	Pulse regenerative output limit setup	○	○	○	○	
	34	For manufacturer's use	—	—	—	—	4-62
	35	Front panel lock setup	○	○	○	○	
	36	For manufacturer's use	—	—	—	—	
	37	Modbus connection setting	○	○	○	○	
	38	Modbus communication setting	○	○	○	○	
	39	Modbus response waiting time	○	○	○	○	
	40	RS232/RS485/Modbus communication timeout time	○	○	○	○	4-63
	41	For manufacturer use	—	—	—	—	
	42	Modbus broadcast setting	○	○	○	○	
	45	Quadrant projection positive direction compensation value	○	—	—	○	
	46	Quadrant projection negative direction compensation value	○	—	—	○	
	47	Quadrant projection compensation delay time	○	—	—	○	
	48	Quadrant projection compensation filter setting L	○	—	—	○	4-64
	49	Quadrant projection compensation filter setting H	○	—	—	○	
	50	For manufacturer's use	—	—	—	—	
	51	For manufacturer's use	—	—	—	—	
	52	For manufacturer's use	—	—	—	—	
	53	For manufacturer's use	—	—	—	—	
	54	For manufacturer's use	—	—	—	—	
	55	For manufacturer's use	—	—	—	—	

Parametr No. Class	No.	Title	Related Control Mode P	S	T	F	Detail page
[Class 5] Enhancing setting	56	Slow stop deceleration time setting	○	—	—	—	4-64
	57	Slow stop S-shape acceleration and deceleration setting	○	—	—	—	
	58	Modbus mirror register setting 1	○	○	○	○	
	59	Modbus mirror register setting 2	○	○	○	○	
	60	Modbus mirror register setting 3	○	○	○	○	4-65
	61	Modbus mirror register setting 4	○	○	○	○	
	62	Modbus mirror register setting 5	○	○	○	○	
	63	Modbus mirror register setting 6	○	○	○	○	
	64	Modbus mirror register setting 7	○	○	○	○	
	65	Modbus mirror register setting 8	○	○	○	○	
	66	Deterioration diagnosis convergence judgment time	○	○	○	○	
	67	Deterioration diagnosis inertia ratio upper limit	○	○	○	○	
	68	Deterioration diagnosis inertia ratio lower limit	○	○	○	○	
	69	Deterioration diagnosis unbalanced load upper limit	○	○	○	○	4-66
	70	Deterioration diagnosis unbalanced load lower limit	○	○	○	○	
	71	Deterioration diagnosis dynamic friction upper limit	○	○	○	○	
	72	Deterioration diagnosis dynamic friction lower limit	○	○	○	○	
	73	Deterioration diagnosis viscous friction upper limit	○	○	○	○	
	74	Deterioration diagnosis viscous friction lower limit	○	○	○	○	
	75	Deterioration diagnosis velocity setting	○	○	○	○	
	76	Deterioration diagnosis torque average time	○	○	○	○	
	77	Deterioration diagnosis torque upper limit	○	○	○	○	4-67
	78	Deterioration diagnosis torque lower limit	○	○	○	○	
	79	Modbus mirror register setting 9	○	○	○	○	
	80	Modbus mirror register setting 10	○	○	○	○	
	81	Modbus mirror register setting 11	○	○	○	○	
	82	Modbus mirror register setting 12	○	○	○	○	
	83	Modbus mirror register setting 13	○	○	○	○	
	84	Modbus mirror register setting 14	○	○	○	○	
	85	Modbus mirror register setting 15	○	○	○	○	
	86	Modbus mirror register setting 16	○	○	○	○	4-68
	87	For manufacturer’ s use	—	—	—	—	
	94	Position compare output condition setting	○	—	—	○	
	96	For manufacturer's use	—	—	—	—	
	97	For manufacturer's use	—	—	—	—	
	102	For manufacturer's use	—	—	—	—	
	103	For manufacturer's use	—	—	—	—	
	105	For manufacturer's use	—	—	—	—	

Parametr No. Class	No.	Title		Related Control Mode P	S	T	F	Detail page
[Class 6] Special setting	00	Analog torque feed forward gain setting		○	○	–	○	4-69
	02	Speed deviation excess setting		○	–	–	–	
	04	JOG trial run command speed		○	○	○	○	
	05	Position 3rd gain valid time		○	–	–	○	
	06	Position 3rd gain scaling factor		○	–	–	○	
	07	Torque command additional value		○	○	–	○	
	08	Positive direction	torque compensation value	○	–	–	○	4-70
	09	Negative direction		○	–	–	○	
	10	Function expansion setup		○	○	○	○	
	11	Current response setup		○	○	○	○	
	13	2nd Inertia ratio		○	○	○	○	4-71
	14	Emergency stop time at alarm		○	○	○	○	
	15	2nd over-speed level setup		○	○	○	○	
	16	For manufacturer's use		–	–	–	–	
	17	Front panel parameter writing selection		○	○	○	○	
	18	Power-up wait time		○	○	○	○	
	19	Encoder Z phase setup		–	–	–	○	
	20	Z-phase setup of external scale		–	–	–	○	4-72
	21	Serial absolute external scale Z phase setup		–	–	–	○	
	22	A, B phase external scale pulse output method selection		–	–	–	○	4-73
	23	Disturbance torque compensating		○	○	–	–	
	24	Disturbance observer filter		○	○	–	–	
	25	Manufacturer use		–	–	–	–	
	26	Manufacturer use		–	–	–	–	
	27	Warning latch time		○	○	○	○	
	28	Special function selection		○	–	–	–	4-74
	30	For manufacturer use		–	–	–	–	
	31	Real-time auto tuning estimation speed		○	○	○	○	
	32	Real-time auto tuning custom setting		○	○	○	○	4-75
	33	Manufacturer use		–	–	–	–	4-77
	34	Hybrid vibration suppression gain		–	–	–	○	
	35	Hybrid vibration suppression filter		–	–	–	○	
	36	Dynamic brake operation input		○	○	○	○	
	37	Oscillation detection threshold value		○	○	○	○	
	38	Warning mask setting		○	○	○	○	
	39	Manufacturer use		–	–	–	–	4-78
	41	1st damping depth		○	–	–	○	
	42	Two-stage torque filter time constant		○	○	○	○	
	43	Two-stage torque filter damping term		○	○	○	○	
	47	Function expansion setting		○	○	○	○	4-79
	48	Adjustment filter		○	○	–	–	
	49	Command response filter/adjustment filter damping term setting		○	–	–	–	
	50	Viscous friction compensation gain		○	○	–	○	4-80
	51	Immediate stop completion wait time		○	○	○	○	
	52	Manufacturer use		–	–	–	–	
	53	Manufacturer use		–	–	–	–	
	54	Manufacturer use		–	–	–	–	
	57	Torque saturation error protection detection time		○	○	–	○	4-81
	58	Serial absolute external scale Z phase shift amount		○	○	○	○	
	59	Manufacturer use		–	–	–	–	
	60	2nd damping depth		○	–	–	○	4-82

Parametr No. Class	No.	Title	Related Control Mode P	S	T	F	Detail page
[Class 6] Special setting	61	1st resonance frequency	○	–	–	–	4-82
	62	1st resonance damping ratio	○	–	–	–	
	63	1st anti-resonance frequency	○	–	–	–	
	64	1st anti-resonance damping ratio	○	–	–	–	
	65	1st response frequency	○	–	–	–	
	66	2nd resonance frequency	○	–	–	–	
	67	2nd resonance damping ratio	○	–	–	–	
	68	2nd anti-resonance frequency	○	–	–	–	
	69	2nd antiresonance damping ratio	○	–	–	–	4-83
	70	2nd response frequency	○	–	–	–	
	71	3rd damping filter depth	○	–	–	○	
	72	4th damping filter depth	○	–	–	○	
	73	Load estimation filter	○	○	–	–	
	74	Torque compensating frequency 1	○	○	–	–	
	75	Torque compensating frequency 2	○	○	–	–	
	76	Number of load estimation	○	○	–	–	
	78	For manufacturer’ s use	–	–	–	–	4-84
	79	For manufacturer’ s use	–	–	–	–	
	87	For manufacturer use	○	○	○	○	
	88	Absolute multi-rotation data upper limit	○	○	○	○	
	97	Function expansion setting 3	○	○	○	○	
	98	Function expansion setting 4	○	○	○	○	4-85

Parametr No. Class	No.	Title	Related Control Mode P	S	T	F	Detail page
[Class 7] Special settin	00	For manufacturer's use	—	—	—	—	4-86
	01	For manufacturer's use	—	—	—	—	
	03	For manufacturer's use	—	—	—	—	
	04	Backlash compensation selection	○	—	—	—	
	05	Backlash compensation amount	○	—	—	—	
	06	Backlash time constant	○	—	—	—	
	07	For manufacturer's use	—	—	—	—	
	08	For manufacturer's use	—	—	—	—	
	09	For manufacturer's use	—	—	—	—	
	10	For manufacturer's use	—	—	—	—	
	11	For manufacturer's use	—	—	—	—	
	12	For manufacturer's use	—	—	—	—	
	13	For manufacturer's use	—	—	—	—	
	14	Main power turn-off warning detection time	○	○	○	○	
	15	For manufacturer's use	—	—	—	—	
	16	For manufacturer's use	—	—	—	—	
	18	Backlash compensation amount maintaining range	○	—	—	—	4-87
	20	For manufacturer's use	—	—	—	—	
	21	For manufacturer's use	—	—	—	—	
	22	Special function enhancement setting 1	○	○	○	○	
	23	For manufacturer's use	—	—	—	—	
	24	For manufacturer's use	—	—	—	—	
	25	For manufacturer's use	—	—	—	—	
	26	For manufacturer's use	—	—	—	—	
	27	For manufacturer's use	—	—	—	—	
	28	For manufacturer's use	—	—	—	—	
	29	For manufacturer's use	—	—	—	—	
	30	For manufacturer's use	—	—	—	—	
	31	For manufacturer's use	—	—	—	—	
	32	For manufacturer's use	—	—	—	—	
	33	For manufacturer's use	—	—	—	—	
	34	For manufacturer's use	—	—	—	—	
	35	For manufacturer's use	—	—	—	—	
	36	For manufacturer's use	—	—	—	—	
	37	For manufacturer's use	—	—	—	—	
	38	For manufacturer's use	—	—	—	—	
	39	For manufacturer's use	—	—	—	—	
	87	For manufacturer's use	—	—	—	—	
	90	RS232/RS485/Modbus communication communication continuous receive error detection count	○	○	○	○	
	91	For manufacturer's use	—	—	—	—	
	92	For manufacturer's use	—	—	—	—	
	93	For manufacturer's use	—	—	—	—	
	120	Absolute scale offset 1	○	○	○	○	4-88
	121	Absolute scale offset 2	○	○	○	○	

Parametr No. Class	No.	Title	Related Control Mode P	S	T	F	Detail page
[Class 8] Manufacturer use	00	For manufacturer's use	—	—	—	—	4-89
	01	For manufacturer's use	—	—	—	—	
	02	For manufacturer's use	—	—	—	—	
	03	For manufacturer's use	—	—	—	—	
	04	For manufacturer's use	—	—	—	—	
	05	For manufacturer's use	—	—	—	—	
	10	For manufacturer's use	—	—	—	—	
	12	For manufacturer's use	—	—	—	—	
	13	For manufacturer's use	—	—	—	—	
	14	For manufacturer's use	—	—	—	—	
	15	For manufacturer's use	—	—	—	—	
	19	For manufacturer's use	—	—	—	—	

Parametr No. Class	No.	Title	Related Control Mode P	S	T	F	Detail page
[Class 9] Manufacturer use	00	For manufacturer's use	—	—	—	—	4-89
	01	For manufacturer's use	—	—	—	—	
	02	For manufacturer's use	—	—	—	—	
	03	For manufacturer's use	—	—	—	—	
	04	For manufacturer's use	—	—	—	—	
	05	For manufacturer's use	—	—	—	—	
	06	For manufacturer's use	—	—	—	—	
	07	For manufacturer's use	—	—	—	—	
	08	For manufacturer's use	—	—	—	—	
	09	For manufacturer's use	—	—	—	—	
	10	For manufacturer's use	—	—	—	—	
	11	For manufacturer's use	—	—	—	—	
	12	For manufacturer's use	—	—	—	—	
	13	For manufacturer's use	—	—	—	—	
	14	For manufacturer's use	—	—	—	—	
	17	For manufacturer's use	—	—	—	—	
	18	For manufacturer's use	—	—	—	—	
	19	For manufacturer's use	—	—	—	—	
	20	For manufacturer's use	—	—	—	—	
	21	For manufacturer's use	—	—	—	—	
	22	For manufacturer's use	—	—	—	—	
	23	For manufacturer's use	—	—	—	—	
	24	For manufacturer's use	—	—	—	—	
	25	For manufacturer's use	—	—	—	—	
	26	For manufacturer's use	—	—	—	—	
	27	For manufacturer's use	—	—	—	—	
	28	For manufacturer's use	—	—	—	—	
	29	For manufacturer's use	—	—	—	—	
	30	For manufacturer's use	—	—	—	—	
	48	For manufacturer's use	—	—	—	—	
	49	For manufacturer's use	—	—	—	—	
	50	For manufacturer's use	—	—	—	—	
[Class 15] Manufacturer use	00	For manufacturer's use	—	—	—	—	4-89
	16	For manufacturer's use	—	—	—	—	
	17	For manufacturer's use	—	—	—	—	
	30	For manufacturer's use	—	—	—	—	
	31	For manufacturer's use	—	—	—	—	
	33	For manufacturer's use	—	—	—	—	
	34	For manufacturer's use	—	—	—	—	
	35	For manufacturer's use	—	—	—	—	

1. Details of parameter

[Class 0] Basic setting

Default: [ ]

Pr0.00 *	Rotational direction setup	Range	Unit	Default	Related control mode
		0 to 1	—	1	P S T F

Setup the relationship between the direction of command and direction of motor rotation.

0: Motor turns CW in response to positive direction command (CW when viewed from load side shaft end)

1: Motor turns CCW in response to positive direction command (CCW when viewed from load side shaft end)

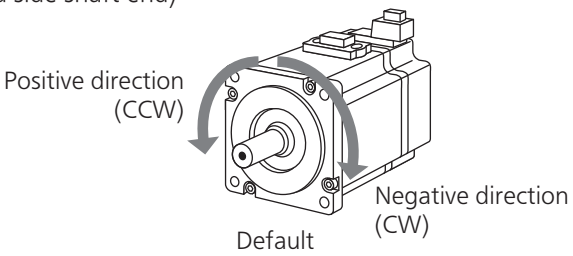

Setup value	Command direction	Motor rotational direction	Positive direction drive inhibit input	Negative direction drive inhibit input
0	Positive direction	CW	Valid	—
	Negative direction	CCW	—	Valid
[1]	Positive direction	CCW	Valid	—
	Negative direction	CW	—	Valid

Pr0.01 *	Control mode setup	Range	Unit	Default	Related control mode
		0 to 6	—	0	P S T F

You can set up the control mode to be used.

Position control type and Communication type setting range is 0,1,3.

Setup value	Content	
	1st mode	2st mode
[0]	Position	—
1	Velocity	—
2	Torque	—
3 *1	Position	Velocity
4 *1	Position	Torque
5 *1	Velocity	Torque
6	Full-closed	—

*1) When you set up the combination mode of 3, 4 or 5, you can select either the 1st or the 2nd with control mode switching input (C-MODE).
When C-MODE is open, the 1st mode will be selected.
When C-MODE is shorted, the 2nd mode will be selected.
Don't enter commands 10 ms before/after switching.
Two-degree-of-freedom control mode is disabled internally.

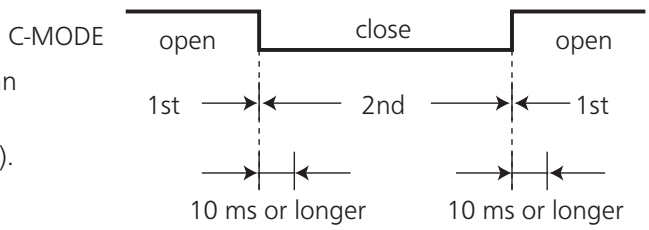

The waveform above shows when logical setting of C-MODE input is a-contact. When b-contact is used, open and short is reversed.

Note

Two-degree-of-freedom control can be selected with Pr6.47.
For details, refer to Pr6.47 (P.4-79).

Note

- A parameter is designated as follows: Class Pr0.00 Parameter No.
- For parameters which No. have a suffix of " * ", changed contents will be validated when you turn on the control power.

Related page
- P.3-34 "Inputs and outputs on connector X4"

Default: [ ]

Pr0.02	Real-time auto-gain tuning setup	Range	Unit	Default	Related control mode
		0 to 6	—	1	P S T F

You can set up the action mode of the real-time auto-gain tuning.

Setup value	Mode	Varying degree of load inertia in motion
0	Invalid	Real-time auto-gain tuning function is disabled.
[1]	Standard	Basic mode. Do not use unbalanced load, friction compensation or gain switching.
2	Positioning *1	Main application is positioning. It is recommended to use this mode on equipment without unbalanced horizontal axis, ball screw driving equipment with low friction, etc.
3	Vertical axis *2	With additional features to the positioning mode - use this mode to positively and effectively compensate for unbalanced load to the vertical axis or minimize variations in setting time.
4	Friction compensation *3	With additional features to the vertical axis mode - use this mode to positively and effectively reduce positioning setting time when the belt driving axis has high friction.
5	Load characteristic measurement	Estimate the load characteristics without changing current parameter setting. This mode requires use of the setup support software.
6	Customize *4	Functions of real-time auto-gain tuning can be customized to meet the requirements of the specific application by combining desired functions according to the Pr6.32 "Real-time auto-gain tuning custom setting" .

*1 Velocity and torque controls are the same as in the standard mode.
*2 Torque control is the same as in the standard mode.
*3 Velocity control is the same as in the vertical axis mode. Torque control is the same as in the standard mode.
*4 Certain function(s) is not available in a specific control mode. Refer to description in Pr6.32.

Two-degree-of-freedom control mode: position control type

For Two-degree-of-freedom control mode, refer to Pr6.47 (P.4-79).
Set up the action mode of the real-time auto-gain tuning.

Setup value	Mode	Varying degree of load inertia in motion
0	Invalid	Real-time auto-gain tuning function is disabled.
[1]	Standard	Stability-first mode. Do not use unbalanced load compensation, friction compensation or gain switching
2	Quick response mode 1	Positioning-first mode. Use this mode for equipment with horizontal axis, low friction ball screw driving and without unbalanced load.
3	Quick response mode 2	In addition to the features provided with the Quick response mode 1, use this mode to compensate unbalanced load, to apply third gain to reduce variation in positioning settling time.
4	Quick response mode 3 *1	In addition to the features provided with the Quick response mode 2, use this mode to shorten positioning settling time when the load has high friction.
5	Load characteristic measurement	Estimate load characteristics without changing basic gain setting or friction compensation setting with the help of the setup support software.
6	Fit gain mode	To be used for fine adjustment of rigidity setting after completion of fit gain.

*1 Velocity control is the same as in the quick response mode 2. Value of parameters, Pr6.08 Forward torque compensation value, Pr6.09 Backward torque compensation value and Pr6.50 Viscous friction compensation gain will be updated but not reflected on operation.

(continued)

Note
- A parameter is designated as follows: Class Pr0.00 Parameter No.
- For parameters which No. have a suffix of " * ", changed contents will be validated when you turn on the control power.

Related page
- P.3-34 "Inputs and outputs on connector X4"

Two-degree-of-freedom control mode: synchronous type

For Two-degree-of-freedom control mode, refer to Pr6.47 (P.4-79).

Set up the action mode of the real-time auto-gain tuning.

Setup value	Mode	Varying degree of load inertia in motion
0	Invalid	Real-time auto-gain tuning function is disabled.
[1]	Synchronous	Synchronous control mode. Do not use this mode for unbalanced load or friction compensate. Use this mode first when maintaining command response filter, then switch to another mode as necessary.
2	Synchronous friction compensation	With dynamic friction compensation/viscous friction compensation in addition to those of synchronous mode. Use this mode when the load has a large friction.
3	Stiffness setting	Use this mode when modifying gain filter setting according to stiffness table without making inertia ratio assumption, unbalanced load compensation or friction compensation. When handling a load with larger inertia variations, first estimate inertia in an appropriate mode, e.g. sync mode, and then switch to this mode.
4	Load characteristics update	Use this mode when applying only inertia ratio, dynamic friction compensation and viscous friction compensation among load characteristics while holding gain filter setting.
5	Load characteristic measurement	Estimate load characteristics without changing basic gain setting or friction compensation setting with the help of the setup support software.
6	Load fluctuation response mode	Use this mode when you wish to make robust adjustments for fluctuating loads.

Default: [ ]

Pr0.03	Selection of machine stiffness at real-time auto-gain tuning	Range	Unit	Default	Related control mode			
		0 to 31	—	A,B,C-frame: 13 D to H-frame: 11	P	S	T	F

You can set up the response while the real-time auto-gain tuning is valid.

low ← machine stiffness → high
low ← servo gain → high
0, 1 - - - - - - - 11 - - 13 - - - - - - - - - - - - 30, 31
low ← response → high

Caution

Higher the setup value, higher the velocity response and servo stiffness will be obtained. However, when increasing the value, check the resulting operation to avoid oscillation or vibration.

Control gain is updated while the motor is stopped. If the motor cannot be stopped due to excessively low gain or continuous application of one-way direction command, any change made to Pr0.03 "Selection of machine stiffness at real-time auto-gain tuning" is not used for update. If the changed stiffness setting is made valid after the motor stopped, abnormal sound or oscillation will be generated. To prevent this problem, stop the motor after changing the stiffness setting and check that the changed setting is enabled.

Note

- A parameter is designated as follows: Class Pr0.00 Parameter No.
- For parameters which No. have a suffix of " * ", changed contents will be validated when you turn on the control power.

Related page

- P.3-34 "Inputs and outputs on connector X4"

Default: [ ]

Pr0.04	Inertia ratio	Range	Unit	Default	Related control mode			
		0 to 10000	%	250 *	P	S	T	F

Set 1st inertia ratio.
You can set up the ratio of the load inertia against the rotor (of the motor) inertia.

Pr0.04 = (load inertia/ rotor inertia) × 100 [%]

The inertia ratio will be estimated at all time while the real-time auto-gain tuning is valid, and its result will be saved to EEPROM every 30 min.

Caution If the inertia ratio is correctly set, the setup unit of Pr1.01 and Pr1.06 becomes (Hz). When the inertia ratio of Pr0.04 is larger than the actual, the setup unit of the velocity loop gain becomes larger, and when the inertia ratio of Pr0.04 is smaller than the actual, the setup unit of the velocity loop gain becomes smaller.

Pr0.05 *	Selection of command pulse input	Range	Unit	Default	Related control mode			
		0 to 2	—	0	P			F

A6 according to pulse specifications,you can choose any one of the most appropriate interface from the two interfaces.
When using open collerctor I/F,Pr0.05=2 that is recommended.
For command pulse input ,you can select either the photocoupler input or the exclusive input for line driver as the command pulse input.

Setup value	Content	PIN NO.	Signal name
[0]	Photocoupler input Both line driver and open collector • Line driver (Permissible max frequency inputs:500 kpps) • Open collector (Permissible max. input frequency:200 kpps)	No.1 No.3 No.4 No.2 No.5 No.6	OPC1 PULS1 PULS2 OPC2 SIGN1 SIGN2
1	Exclusive input for line driver • Line driver (Permissible max. input frequency:8 Mpps)	No.44 No.45 No.46 No.47	PULSH1 PULSH2 SIGNH1 SIGNH2
2	Photocoupler inputs • Open collector (Permissible max. input frequency:200 kpps)	No.1 No.3 No.4 No.2 No.5 No.6	OPC1 PULS1 PULS2 OPC2 SIGN1 SIGN2

Pelese refer to P.3-34 and P.3-35.

Note
- A parameter is designated as follows: Class Pr0.00 Parameter No.
- For parameters which No. have a suffix of " * ", changed contents will be validated when you turn on the control power.

Related page
- P.3-34 "Inputs and outputs on connector X4"

Default: [ ]

Pr0.06 *	Command pulse rotational direction setup	Range	Unit	Default	Related control mode			
		0 to 1	—	0	P			F

Pr0.07 *	Command pulse input mode setup	Range	Unit	Default	Related control mode			
		0 to 3	—	1	P			F

You can set up the rotational direction against the command pulse input, and the command pulse input format.

The table below shows combinations of Pr0.06 Command pulse rotational direction setup and Pr0.07 Command pulse input mode setup.
Pulses are counted at edges indicated by the arrows as shown in the table.

- Input format command pulse

Pr0.06 setup value (Command pulse rotational direction setup)	Pr0.07 setup value (Command pulse input mode setup)	Command pulse format	Signal title	Positive direction command	Negative direction command
[0]	0 or 2	90° phase difference 2-phase pulse (A + B-phase)	PULS SIGN	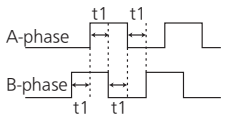 B-phase advances to A by 90°.	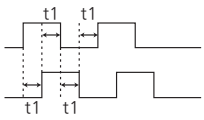 B-phase delays from A by 90°.
	[1]	Positive direction pulse train + Negative direction pulse train	PULS SIGN	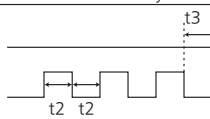	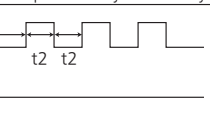
	3	pulse train + Signal	PULS SIGN	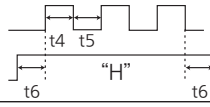	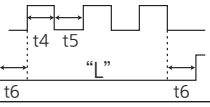
1	0 or 2	90° phase difference 2-phase pulse (A + B-phase)	PULS SIGN	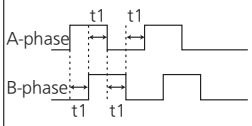 B-phase delays from A by 90°.	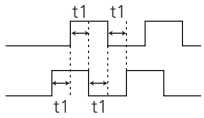 B-phase advances to A by 90°.
	1	Positive direction pulse train + Negative direction pulse train	PULS SIGN	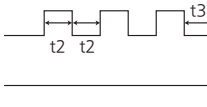	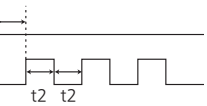
	3	pulse train + Signal	PULS SIGN	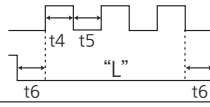	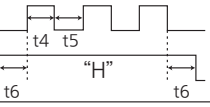

- Permissible max. input frequency, and min. necessary time width of command pulse input signal.

Input I/F of PULS/SIGN signal		Permissible max. input frequency	Min. necessary time width (μs)					
			t1	t2	t3	t4	t5	t6
PULSH1,2 SIGNH1,2	A,B-phase input,afer multiplied by 4	8 Mpps	0.125	0.125	0.125	0.125	0.125	0.125
	A,B-phase input except	4 Mpps	0.25	0.125	0.125	0.125	0.125	0.125
PULS1,2 SIGN1,2	Line driver interface	500 kpps	2	1	1	1	1	1
	Open collector interface	200 kpps	5	2.5	2.5	2.5	2.5	2.5

Make the rising/falling time of the command pulse input signal to 0.1 μs or smaller.
When parameter Pr0.07=0 or 2,if parameter Pr0.08=10000,2 phase pulse input 2500 pulse per one motor revolution.
When parameter Pr0.07=1 or 3,if parameter Pr0.08=10000,because of the rotation of a single pulse,so input 10000 pulse per one motor revolution.

Note
- A parameter is designated as follows: Class Pr0.00 Parameter No.
- For parameters which No. have a suffix of " * ", changed contents will be validated when you turn on the control power.

Related page
- P.3-34 "Inputs and outputs on connector X4"

Default: [ ]

Pr0.08 *	Command pulse counts per one motor revolution	Range	Unit	Default	Related control mode			
		0 to 8388608	pulse	10000	P			

Set the command pulses that causes single turn of the motor shaft.
When this setting is 0, Pr0.09 1st numerator of electronic gear and Pr0.10 Denominator of electronic gear become valid.

Pr0.09	1st numerator of electronic gear	Range	Unit	Default	Related control mode			
		0 to 2^{30}	—	0	P			F

Set the numerator of division/multiplication operation made according to the command pulse input.
This setup is enabled when Pr0.08 command pulse counts per one motor revolution = 0.

Pr0.10	Denominator of electronic gear	Range	Unit	Default	Related control mode			
		1 to 2^{30}	—	10000	P			F

Set the Denominator of division/multiplication operation made according to the command pulse input.
This setup is enabled when Pr0.08 command pulse counts per one motor revolution = 0.

<Interrelationship between Pr0.08, Pr0.09 and Pr0.10 during Position control>

Pr0.08	Pr0.09	Pr0.10	Command division/multiplication operation
1 to 8388608	— (Not effect)	— (Not effect)	Command pulse input → [Encoder resolution / [Pr0.08 setup value]] → Positional command * Regardless of setup of Pr0.09 and Pr0.10, this operation is processed according to setup value of Pr0.08.
0	0	0 to 1073741824	Command pulse input → [Encoder resolution / [Pr0.10 setup value]] → Positional command * When both Pr0.08 and Pr0.09 are set to 0, this operation is processed according to setup value of Pr0.10.
	1 to 1073741824	1 to 1073741824	Command pulse input → [[Pr0.09 setting] / [Pr0.10 setting]] → Positional command * When setup value of Pr0.08 is 0, and Pr0.09 ≠ 0, this operation is processed according to setup value of Pr0.09 and Pr0.10.

■ Pr0.08=0, Pr0.09 ≠ 0

Default: [ ]

Position command of division and multiplication (F) is setting Pr0.10, Pr0.09 such asencoder resolution (2^{23}).

$F = f \times Pr0.09/Pr0.10 = 2^{23}$ (8388608)

F : Position command (Internal command pulse counts per one motor revolution)

f : command pulse counts per one motor revolution (pulse counts per one motor revolution by customer)

Setting example

Encoder resolution	2^{23} (8388608)
The input pulse counts per one motor revolution (f) is 5000	Pr0.09 [8388608]
	Pr0.10 [5000]

<Interrelationship between Pr0.08, Pr0.09 and Pr0.10 during full closed control>

Pr0.08	Pr0.09	Pr0.10	Command division/multiplication operation
(Invalid)	0	1 to 1073741824	Command pulse input → $\frac{1}{1}$ → Positional command * If Pr0.09 is 0 during full closed controlling, the process as shown above is performed with both numerator and denominator set to 1.
	1 to 1073741824	1 to 1073741824	Command pulse input → $\frac{[Pr0.09\ setting]}{[Pr0.10\ setting]}$ → Positional command * When setup value of Pr0.09 ≠ 0, this operation is processed according to setup value of Pr0.09 and Pr0.10.

Caution The desired setting can be determined by selecting value of numerator and denominator of electronic gear. However, an excessively high division or multiplication ratio cannot guarantee the operation. The ratio should be in a range between 1/1000 and 1000.
Excessively high multiplication ratio will cause Err27.2 (command pulse multiplication error protection) due to varying command pulse input or noises, even if the other settings are within the specified range.
During full closed controlling, do not change command division and multiplication ratio. Otherwise, Err25.0 (Hybrid over deviation alarm) will be generated.

Pr0.11 *	Output pulse counts per one motor revolution	Range	Unit	Default	Related control mode			
		0 to 2097152	P/r	2500	P	S	T	F

You can set up the output pulse counts per one motor revolution for each OA and OB .

Caution For details of setup, refer to description in Pr5.03.

Note
- A parameter is designated as follows: Class Pr0.00 Parameter No.
- For parameters which No. have a suffix of " * ", changed contents will be validated when you turn on the control power.

Related page
- P.4-92 "Setup of Motor Rotational Speed and Input Pulse Frequency"
- P.6-5 "Protective function (Detail of error code)"

Default: [ ]

Pr5.03 *	Denominator of pulse output division	Range	Unit	Default	Related control mode			
		0 to 8388608	—	0	P	S	T	F

For an application where the number of output pulses per one motor revolution is not an integer, set this parameter to a value other than 0; and the dividing ratio can be set by using Pr0.11 as the numerator and Pr5.03 as the denominator.

Output pulse counts per one revolution
= (Pr0.11 setup value / Pr5.03 setup value) × Encoder resolution × $\frac{1}{4}$

<Combination of Pr0.11 Output pulse counts per one motor revolution and Pr5.03 Denominator of pulse output division>

Pr0.11	Pr5.03	Pulse reproducing process
1 to 2097152	[0]	When the output source is encoder Encoder feedback pulse [pulse] → $\frac{[\text{Pr0.11 setup value}]\times 4}{\text{Encoder resolution}}$ → Output pulse [pulse] * When Pr5.03 = 0, the above process is made according to Pr0.11 setup value. The number of pulses of reproduced pulse output OA and OB are the number of pulses set in Pr0.11. The resolution of pulse output per one revolution is equal to or less the encoder resolution. When the output source is external scale External scale pulse [pulse] → $\frac{1}{1}$ → Output pulse [pulse] * Division ratio is 1:1.
	1 to 8388608	Encoder feedback pulse or external scale pulse [pulse] → $\frac{[\text{Pr0.11 setup value}]}{[\text{Pr5.03 setup value}]}$ → Output pulse [pulse] * If Pr5.03 is not equal to 0, then the above process is performed based on setup value of Pr0.11 and Pr5.03. When the output source is encoder The number of reproduced pulses (OA, OB) per one motor revolution is not an integer. Note that when the number of pulses per one motor revolution is not an integer, Z-phase output is not synchronized with that of A-phase, reducing pulse width. The pulse output resolution per one revolution cannot become higher than the encoder resolution. When output source is external scale Setting: numerator (Pr0.11 setting) ≦ denominator (Pr.5.03 setting). No multiplication per one revolution cannot become higher than the external scale resolution.

Note
- A parameter is designated as follows: Class Pr0.00 Parameter No.
- For parameters which No. have a suffix of " * ", changed contents will be validated when you turn on the control power.

Related page
- P.3-34 "Inputs and outputs on connector X4"

Default: [ ]

Pr0.12 *	Reversal of pulse output logic	Range	Unit	Default	Related control mode
		0 to 3	—	0	P S T F

You can set up the B-phase logic and the output source of the pulse output. With this parameter, you can reverse the phase relation between the A-phase pulse and the B-phase pulse by reversing the B-phase logic. Encoder or external scale can be selected as the output source for full-closed control. The encoder is selected as the source if not for full-closed control.

<Reversal of pulse output logic>

Pr0.12	B-phase logic	Output source	CCW direction rotation	CW direction rotation
[0]	Non-reversal	Encoder	A-phase / B-phase	A-phase / B-phase
2		External scale		
1	Reversal	Encoder	A-phase / B-phase	A-phase / B-phase
3		External scale		

Caution Setup value 2 and 3 are valid only for full-closed control. Setting must be 0 or 1 if not for full-closed control.
The selection of the output source of Z-phase is held concurrently.
Setup value 0 and 1 are Z-phase output of encoder.
Setup value 2 and 3 are Z-phase output of external scale.

Pr0.13	1st torque limit	Range	Unit	Default	Related control mode
		0 to 500	%	500	P S T F

Note You can set up the limit value of the motor output torque.
For details of torque limit value, refer to P.2-106.

Pr0.14	Position deviation excess setup	Range	Unit	Default	Related control mode
		0 to 1073741824	Command unit	100000	P F

- Set excess range of positional deviation by the command unit (default).
- Setup unit can be changed to encoder unit through Pr5.20 (position setup unit selection). If the unit is changed, set up with the encoder pulse counts at the position control and with the external scale pulse counts at the full-closed control.
- Err24.0 (Error detection of position deviation excess) becomes invalid when you set up this to 0.

Note For description of “command unit” and “encoder unit” , refer to P.4-58 “Pr5.20” .

Pr0.15 *	Absolute encoder setup	Range	Unit	Default	Related control mode
		0 to 4	—	1	P S T F

You can set up the using method of 23-bit absolute encoder.

Setup value	Function
0	Used as absolute system .
[1]	Used as incremental system .
2	Used as absolute system (absolute mode), but multirotation counter over is ignored.
3	Used as a single-turn absolute mode.
4	Used as an absolute system(absolute mode);however,any value can be set for the upper limit of the multi-turn counter.(continuous rotating absolute encoder mode)

Default: [ ]

Pr0.16 *	External regenerative resistor setup	Range	Unit	Default	Related control mode			
		0 to 3	—	A,B,G,H-frame: 3 C,D,E,F-frame: 0	P	S	T	F

With this parameter, you can select either to use the built-in regenerative resistor of the driver, or to separate this built-in regenerative resistor and externally install the regenerative resistor (between P and B of Connector XB in case of A to D-frame, between P and B of Connector XC in case of D-frame(400 V type), E-frame(200, 400 V type) between P and B of terminal block in case of F to H-frame(200 V, 400 Vtype)).
A, B, G, H-frame driver is not provided with built-in resister.

Setup value	Regenerative resistor to be used	Function
[0] (C to F-frame)	Built-in resistor	Regenerative processing circuit will be activated and regenerative resistor overload protection will be triggered according to the built-in resistor (approx. 1 % duty).
1	External resistor	The driver trips due to regenerative overload protection (Err18.0), when regenerative processing circuit is activated and its active ratio exceeds 10 %.
2	External resistor	Regenerative processing circuit is activated, but no regenerative over-load protection is triggered.
[3] (A, B, G, H-frame)	No resistor	Both regenerative processing circuit and regenerative protection are not activated, and built-in capacitor handles all regenerative power.

Remarks Install an external protection such as thermal fuse when you use the external regenerative resistor.
Otherwise, the regenerative resistor might be heated up abnormally and result in burnout, regardless of validation or invalidation of regenerative over-load protection.

Caution When you use the built-in regenerative resistor, never to set up other value than 0. Don't touch the external regenerative resistor.
External regenerative resistor gets very hot, and might cause burning.

Pr0.17 *	Load factor of external regenerative resistor selection	Range	Unit	Default	Related control mode			
		0 to 4	—	0	P	S	T	F

When selecting the external regenerative resistor (Pr0.16 = 1, 2), select the computing method of load factor of regenerative resistor.

Setup value	Function
[0]	Regenerative load factor is 100 % when duty factor of external regenerative resistor is 10 %.
1 to 4	For manufacturer's use (do not setup)

Pr0.18 *	For manufacturer' s use	Range	Unit	Default	Related control mode			
		—	—	0				

Pleses fixed to 0.

Note
- A parameter is designated as follows: Class Pr0.00 Parameter No.
- For parameters which No. have a suffix of " * ", changed contents will be validated when you turn on the control power.

Related page
- P.3-34 "Inputs and outputs on connector X4"

1. Details of parameter

[Class 1] Gain adjustment

Default: [ ]

Pr1.00	1st gain of position loop	Range	Unit	Default	Related control mode			
		0 to 30000	0.1 /s	A,B,C-frame: 480 D to H-frame: 320	P			F

You can determine the response of the positional control system.
Higher the gain of position loop you set, faster the positioning time you can obtain.
Note that too high setup may cause oscillation.

Pr1.01	1st gain of velocity loop	Range	Unit	Default	Related control mode			
		1 to 32767	0.1 Hz	A,B,C-frame: 270 D to H-frame: 180	P	S	T	F

You can determine the response of the velocity loop.
In order to increase the response of overall servo system by setting high position loop gain, you need higher setup of this velocity loop gain as well. However, too high setup may cause oscillation.

Caution When the inertia ratio of Pr0.04 is set correctly, the setup unit of Pr1.01 becomes (Hz).

Pr1.02	1st time constant of velocity loop integration	Range	Unit	Default	Related control mode			
		1 to 10000	0.1 ms	A,B,C-frame: 210 D to H-frame: 310	P	S	T	F

You can set up the integration time constant of velocity loop.
Smaller the setup, faster you can dog-in deviation at stall to 0.
The integration will be maintained by setting to "9999".
The integration effect will be lost by setting to "10000".

Pr1.03	1st filter of speed detection	Range	Unit	Default	Related control mode			
		0 to 5	—	0	P	S	T	F

You can set up the time constant of the low pass filter (LPF) after the speed detection, in 6 steps.
Higher the setup, larger the time constant you can obtain so that you can decrease the motor noise, however, response becomes slow. Use with a default value of 0 in normal operation.

Pr1.04	1st time constant of torque filter	Range	Unit	Default	Related control mode			
		0 to 2500	0.01 ms	A,B,C-frame: 84 D to H-frame: 126	P	S	T	F

You can set up the time constant of the 1st delay filter inserted in the torque command portion. You might expect suppression of oscillation caused by distortion resonance.

Caution
- To Panasonic MINAS users: A4 and higher series
  CAUTION: Parameter settings shown in this manual may differ from those applied to your product (s).

Note
- For parameters which No. have a suffix of " * ", changed contents will be validated when you turn on the control power.

Related page
- P.3-34 "Inputs and outputs on connector X4"

Default: [ ]

Pr1.05	2nd gain of position loop	Range	Unit	Default	Related control mode			
		0 to 30000	0.1 /s	A,B,C-frame: 480 D to H-frame: 320	P			F

Pr1.06	2nd gain of velocity loop	Range	Unit	Default	Related control mode			
		1 to 32767	0.1 Hz	A,B,C-frame: 270 D to H-frame: 180	P	S	T	F

Pr1.07	2nd time constant of velocity loop integration	Range	Unit	Default	Related control mode			
		1 to 10000	0.1 ms	A,B,C-frame: 210 D to H-frame: 310	P	S	T	F

Pr1.08	2nd filter of speed detection	Range	Unit	Default	Related control mode			
		0 to 5	—	0	P	S	T	F

Pr1.09	2nd time constant of torque filter	Range	Unit	Default	Related control mode			
		0 to 2500	0.01 ms	A,B,C-frame: 84 D to H-frame: 126	P	S	T	F

Position loop, velocity loop, speed detection filter and torque command filter have their 2 pairs of gain or time constant (1st and 2nd).

Related page

For details of switching the 1st and the 2nd gain or the time constant, refer to P.5-34 "Gain Switching Function" of Adjustment.
The function and the content of each parameter is as same as that of the 1st gain and time constant.

Pr1.10	Velocity feed forward gain	Range	Unit	Default	Related control mode			
		0 to 4000	0.1 %	1000	P			F

Multiply the velocity control command calculated according to the internal positional command by the ratio of this parameter and add the result to the speed command resulting from the positional control process.

Pr1.11	Velocity feed forward filter	Range	Unit	Default	Related control mode			
		0 to 6400	0.01 ms	0	P			F

Set the time constant of 1st delay filter which affects the input of velocity feed forward.

<Usage example of velocity feed forward>
The velocity feed forward will become effective as the velocity feed forward gain is gradually increased with the velocity feed forward filter set at approx. 50 (0.5 ms). The positional deviation during operation at a constant velocity is reduced as shown in the equation below in proportion to the value of velocity feed forward gain.

Positional deviation [unit of command] = command speed [unit of command/s] /
positional loop gain [1 /s] × (100 - velocity feed forward gain [%]) / 100

Note

- A parameter is designated as follows: Class Pr0.00 Parameter No.
- For parameters which No. have a suffix of " * ", changed contents will be validated when you turn on the control power.

Related page
- P.3-34 "Inputs and outputs on connector X4"

Default: [ ]

Pr1.12	Torque feed forward gain	Range	Unit	Default	Related control mode
		0 to 2000	0.1 %	1000	P S T F

- Multiply the torque command calculated according to the velocity control command by the ratio of this parameter and add the result to the torque command resulting from the velocity control process.
- Positional deviation at a constant acceleration/deceleration can be minimized close to 0 by increasing the torque forward gain. This means that positional deviation can be maintained at near 0 over entire operation range while driving in trapezoidal speed pattern under ideal condition where disturbance torque is not active.

Pr1.13	Torque feed forward filter	Range	Unit	Default	Related control mode
		0 to 6400	0.01 ms	0	P S T F

- Set up the time constant of 1st delay filter which affects the input of torque feed forward.
- The torque feed forward will become effective as the torque feed forward gain is gradually increased with the torque feed forward filter is set at approx. 50 (0.5 ms).

<Usage example of torque feed forward>

- To use the torque feed forward, correctly set the inertia ratio.
  Use the value that was determined at the start of the real time auto tuning, or set the inertia ratio that can be calculated from the machine specification to Pr0.04 Inertia ratio.
- The torque feed forward will become effective as the torque feed forward gain is gradually increased with the torque feed forward filter is set at approx. 50 (0.5 ms).
- Positional deviation at a constant acceleration/deceleration can be minimized close to 0 by increasing the torque forward gain. This means that positional deviation can be maintained at near 0 over entire operation range while driving in trapezoidal speed pattern under ideal condition where disturbance torque is not active .

Caution

Zero positional deviation is impossible in actual situation because of disturbance torque.
As with the velocity feed forward, large torque feed forward filter time constant decreases the operating noise but increases positional deviation at acceleration change point.

Pr1.14	2nd gain setup	Range	Unit	Default	Related control mode
		0 to 1	—	1	P S T F

Arrange this parameter when performing optimum adjustment by using the gain switching function.

Setup value	Gain selection/switching
0	1st gain is fixed at a value. By using the gain switching input (GAIN), change the velocity loop operation from PI to P. GAIN input photocoupler OFF → PI operation GAIN input photocoupler ON → P operation * The above description applies when the logical setting of GAIN input is Normal Open. ON/OFF of photocoupler is reversed when Normal Close.
[1]	Enable gain switching of 1st gain (Pr1.00-Pr1.04) and 2nd gain (Pr1.05-Pr1.09).

Related page

For switching condition of the 1st and the 2nd, refer to P.5-34 "Gain Switching Function" of Adjustment.

Default: [ ]

Pr1.15	Mode of position control switching	Range	Unit	Default	Related control mode			
		0 to 10	—	0	P			F

Set up the triggering condition of gain switching for position control.

Setup value	Switching condition	Gain switching condition
[0]	Fixed to 1st gain	Fixed to the 1st gain (Pr1.00 to Pr1.04).
1	Fixed to 2nd gain	Fixed to the 2nd gain (Pr1.05 to Pr1.09).
2	With gain switching input	• 1st gain when the gain switching input (GAIN) is open. • 2nd gain when the gain switching input (GAIN) is connected to COM-. * If no input signal is allocated to the gain switching input (GAIN), the 1st gain is fixed.
3	Torque command is large	• Shift to the 2nd gain when the absolute value of the torque command exceeded (level + hysteresis) (%) previously with the 1st gain. • Return to the 1st gain when the absolute value of the torque command was kept below (level - hysteresis) (%) previously during delay time with the 2nd gain.
5	Speed command is large	• Valid for position and full-closed controls. • Shift to the 2nd gain when the absolute value of the speed command exceeded (level + hysteresis) (r/min) previously with the 1st gain. • Return to the 1st gain when the absolute value of the speed command was kept below (level - hysteresis) (r/min) previously during delay time with the 2nd gain.
6	Position deviation is large	• Valid for position and full-closed controls. • Shift to the 2nd gain when the absolute value of the positional deviation exceeded (level + hysteresis) (pulse) previously with the 1st gain. • Return to the 1st gain when the absolute value of the positional deviation was kept below (level - hysteresis) (pulse) previously over delay time with the 2nd gain. * Unit of level and hysteresis (pulse) is set as the encoder resolution for positional control and external scale resolution for full-closed control.
7	Position command exists	• Valid for position and full-closed controls. • Shift to the 2nd gain when the positional command was not 0 previously with the 1st gain. • Return to the 1st gain when the positional command was kept 0 previously during delay time with the 2nd gain.
8	Not in positioning complete	• Valid for position and full-closed controls. • Shift to the 2nd gain when the positioning was not completed previously with the 1st gain. • Return to the 1st gain when the positioning was kept in completed condition previously during delay time with the 2nd gain.
9	Actual speed is large	• Valid for position and full-closed controls. • Shift to the 2nd gain when the absolute value of the actual speed exceeded (level + hysteresis) (r/min) previously with the 1st gain. • Return to the 1st gain when the absolute value of the actual speed was kept below (level - hysteresis) (r/min) previously during delay time with the 2nd gain.
10	Position command exists + Actual speed	• Valid for position and full-closed controls. • Shift to the 2nd gain when the positional command was not 0 previously with the 1st gain. • Return to the 1st gain when the positional command was kept at 0 during the delay time and the absolute value of actual speed was kept below (level - hysteresis) (r/min) previously with the 2nd gain.

Note
• A parameter is designated as follows: Class Pr0.00 Parameter No.
• For parameters which No. have a suffix of " * ", changed contents will be validated when you turn on the control power.

Related page
• P.3-34 "Inputs and outputs on connector X4"

Default: [ ]

Pr1.16	Delay time of position control switching	Range	Unit	Default	Related control mode
		0 to 10000	0.1 ms	10	P F

For position controlling : When shifting from the 2nd gain to the 1st gain with Pr1.15 Position control switching mode set at 3, 5, 6, 7, 8, 9 or 10, set up the delay time from trigger detection to the switching operation.

Pr1.17	Level of position control switching	Range	Unit	Default	Related control mode
		0 to 20000	Mode-dependent	0	P F

For position controlling: Set up triggering level when Pr1.15 Position control switching mode is set at 3, 5, 6, 9 or 10.
Unit of setting varies with switching mode.

Caution Set the level equal to or higher than the hysteresis.

Pr1.18	Hysteresis at position control switching	Range	Unit	Default	Related control mode
		0 to 20000	Mode-dependent	0	P F

For position controlling: Set up triggering hysteresis when Pr1.15 Position control switching mode is set at 3, 5, 6, 9 or 10.
Unit of setting varies with switching mode.

Caution When level < hysteresis, the hysteresis is internally adjusted so that it is equal to level.

Pr1.19	Position gain switching time	Range	Unit	Default	Related control mode
		0 to 10000	0.1 ms	10	P F

For position controlling: If the difference between Pr1.00 1st gain of position loop and Pr1.05 2nd gain of poison loop is large, the increasing rate of position loop gain can be limited by this parameter.
The position loop gain will increase over the time set.

<Position gain switching time>
When using position control and full-closed control, gain of position loop rapidly changes, causing torque change and vibration. By adjusting Pr1.19 Position gain switching time, increasing rate of the poison loop gain can be decreased and vibration level can be reduced.

Caution Setting of this parameter does not affect the gain switching time when the gain of position loop is switched to lower level (gain is switched immediately).

Example: 1st (Pr1.00) > 2nd (Pr1.05)

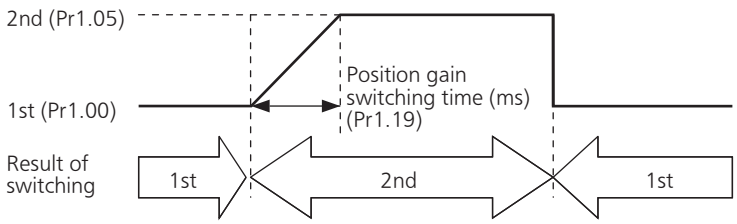

Note
- A parameter is designated as follows: Class Pr0.00 Parameter No.
- For parameters which No. have a suffix of " * ", changed contents will be validated when you turn on the control power.

Related page
- P.3-34 "Inputs and outputs on connector X4"

Default: [ ]

Pr1.20	Mode of velocity control switching	Range	Unit	Default	Related control mode
		0 to 5	—	0	S

For velocity controlling: Set the condition to trigger gain switching.

Setup value	Switching condition	Gain switching condition
[0]	Fixed to the 1st gain.	Fixed to the 1st gain (Pr1.00 to Pr1.04).
1	Fixed to the 2nd gain.	Fixed to the 2nd gain (Pr1.05 to Pr1.09).
2	Gain switching input	• 1st gain when the gain switching input (GAIN) is open. • 2nd gain when the gain switching input (GAIN) is connected to COM−. * If no input signal is allocated to the gain switching input (GAIN), the 1st gain is fixed.
3	Torque command	• Shift to the 2nd gain when the absolute value of the torque command exceeded (level + hysteresis) (%) previously with the 1st gain. • Return to the 1st gain when the absolute value of the torque command was kept below (level - hysteresis) (%) previously during delay time with the 2nd gain.
4	Speed command variation is larger.	• Valid only during velocity control. • Shift to the 2nd gain when the absolute value of the speed command variations exceeded (level + hysteresis) (10 r/min/s) previously with the 1st gain. • Return to the 1st gain when the absolute value of the speed command variations was kept below (level - hysteresis) (10 r/min/s) during delay time previously with the 2nd gain. * The 1st gain is fixed while the velocity control is not applied.
5	Speed command is large	• Valid for velocity controls. • Shift to the 2nd gain when the absolute value of the speed command exceeded (level + hysteresis) (r/min) previously with the 1st gain. • Return to the 1st gain when the absolute value of the speed command was kept below (level - hysteresis) (r/min) previously during delay time with the 2nd gain.

Related page For the switching level and timing, refer to P.5-35, "Setup of Gain Switching Condition" of Adjustment.

Pr1.21	Delay time of velocity control switching	Range	Unit	Default	Related control mode
		0 to 10000	0.1 ms	0	S

For velocity controlling: When shifting from the 2nd gain to the 1st gain with Pr1.20 Velocity control switching mode set at 3, 4 or 5, set the delay time from trigger detection to the switching operation.

Pr1.22	Level of velocity control switching	Range	Unit	Default	Related control mode
		0 to 20000	Mode-dependent	0	S

For velocity controlling: Set up triggering level when Pr1.20 Velocity control gain switching mode is set at 3, 4 or 5.

Caution
Unit of setting varies with switching mode.
Set the level equal to or higher than the hysteresis.

Note
• A parameter is designated as follows: Class Pr0.00 Parameter No.
• For parameters which No. have a suffix of " * ", changed contents will be validated when you turn on the control power.

Related page • P.3-34 "Inputs and outputs on connector X4"

Default: [ ]

Pr1.23	Hysteresis at velocity control switching	Range	Unit	Default	Related control mode			
		0 to 20000	Mode-dependent	0		S		

For velocity controlling: Set up triggering hysteresis when Pr1.20 Velocity control gain switching mode is set at 3, 4 or 5.

Caution Unit of setting varies with switching mode.
When level < hysteresis, the hysteresis is internally adjusted so that it is equal to level.

Pr1.24	Mode of torque control switching	Range	Unit	Default	Related control mode			
		0 to 3	—	0			T	

For torque controlling: Set the condition to trigger gain switching.

Setup value	Switching condition	Gain switching condition
[0]	Fixed to the 1st gain.	Fixed to the 1st gain (Pr1.00 to Pr1.04).
1	Fixed to the 2nd gain.	Fixed to the 2nd gain (Pr1.05 to Pr1.09).
2	Gain switching input	• 1st gain when the gain switching input (GAIN) is open. • 2nd gain when the gain switching input (GAIN) is connected to COM−. * If no input signal is allocated to the gain switching input (GAIN), the 1st gain is fixed.
3	Torque command	• Shift to the 2nd gain when the absolute value of the torque command exceeded (level + hysteresis) (%) previously with the 1st gain. • Return to the 1st gain when the absolute value of the torque command was kept below (level - hysteresis) (%) previously during delay time with the 2nd gain.

Pr1.25	Delay time of torque control switching	Range	Unit	Default	Related control mode			
		0 to 10000	0.1 ms	0			T	

For torque controlling : When shifting from the 2nd gain to the 1st gain with Pr1.24 Torque control switching mode set at 3, set up the delay time from trigger detection to the switching operation.

Pr1.26	Level of torque control switching	Range	Unit	Default	Related control mode			
		0 to 20000	Mode-dependent	0			T	

For torque controlling: Set up triggering level when Pr1.24 Torque control gain switching mode is set at 3.
Unit varies depending on the setup of mode of control switching.

Caution Set the level equal to or higher than the hysteresis.

Pr1.27	Hysteresis at torque control switching	Range	Unit	Default	Related control mode			
		0 to 20000	Mode-dependent	0			T	

For torque controlling: Set up triggering hysteresis when Pr1.24 Torque control gain switching mode is set at 3.
Unit of setting varies with switching mode.

Caution When level < hysteresis, the hysteresis is internally adjusted so that it is equal to level.

From Pr1.28 toPr1.78 are all parameters for manufacturer's use.Please do not change the default parameters.

1. Details of parameter

[Class 2] Damping control

Default: [ ]

Pr2.00	Adaptive filter mode setup	Range	Unit	Default	Related control mode			
		0 to 6	—	Basic type:1 Communication type:1 Multifunction typ:0	P	S		F

Set up the resonance frequency to be estimated by the adaptive filter and specify the operation after estimation.

Setup value	Content	
[0]	Adaptive filter: invalid	Parameters related to the 3rd and 4th notch filter hold the current value.
1	Adaptive filter: 1 filter is valid	One adaptive filter is enabled. Parameters related to the 3rd notch filter will be updated based on adaptive performance.
2	Adaptive filter: 2 filters are valid	Two adaptive filters are enabled. Parameters related to the 3rd and 4th notch filters will be updated based on adaptive performance.
3	Resonance frequency measurement mode	Measure the resonance frequency. Result of measurement can be checked with PANATERM. Parameters related to the 3rd and 4th notch filter hold the current value.
4	Clear result of adaptation	Parameters related to the 3rd and 4th notch filter are disabled and results of adaptive operation are cleared.
5	High-precision adaptive filter	Two adaptive filters are enabled. Parameters related to the 3rd and 4th notch filters will be updated based on the results of adaptive performance. Use of this setup value is recommended when using 2 adaptive filters.
6	For manufacturer's use	PANATERM' s fit gain function used internally. Do not use this setup value in the normal condition.

Pr2.01	1st notch frequency	Range	Unit	Default	Related control mode			
		50 to 5000	Hz	5000	P	S	T	F

Set the center frequency of the 1st notch filter.

Caution The notch filter function will be invalidated by setting up this parameter to "5000".

Pr2.02	1st notch width selection	Range	Unit	Default	Related control mode			
		0 to 20	—	2	P	S	T	F

Set the width of notch at the center frequency of the 1st notch filter.

Caution Higher the setup, larger the notch width you can obtain. Use with default setup in normal operation.

Pr2.03	1st notch depth selection	Range	Unit	Default	Related control mode			
		0 to 99	—	0	P	S	T	F

Set the depth of notch at the center frequency of the 1st notch filter.

Caution Higher the setup, shallower the notch depth and smaller the phase delay you can obtain.

Pr2.04	2nd notch frequency	Range	Unit	Default	Related control mode			
		50 to 5000	Hz	5000	P	S	T	F

Set the center frequency of the 2nd notch filter.

Caution The notch filter function will be invalidated by setting up this parameter to "5000".

Default: [ ]

Pr2.05	2nd notch width selection	Range	Unit	Default	Related control mode
		0 to 20	—	2	P S T F

Caution
Set the width of notch at the center frequency of the 2nd notch filter.
Higher the setup, larger the notch width you can obtain. Use with default setup in normal operation.

Pr2.06	2nd notch depth selection	Range	Unit	Default	Related control mode
		0 to 99	—	0	P S T F

Caution
Set the depth of notch at the center frequency of the 2nd notch filter.
Higher the setup, shallower the notch depth and smaller the phase delay you can obtain.

Pr2.07	3rd notch frequency	Range	Unit	Default	Related control mode
		50 to 5000	Hz	5000	P S T F

Caution
Notch frequency is automatically set to the 1st resonance frequency estimated by the adaptive filter.
In no resonance point is found, the frequency is set to 5000.

Pr2.08	3rd notch width selection	Range	Unit	Default	Related control mode
		0 to 20	—	2	P S T F

Caution
Set the width of notch at the center frequency of the 3rd notch filter.
Higher the setup, larger the notch width you can obtain. Use with default setup in normal operation.
When the applicable filter function is used, parameter value is automatically set.

Pr2.09	3rd notch depth selection	Range	Unit	Default	Related control mode
		0 to 99	—	0	P S T F

Caution
Set the depth of notch at the center frequency of the 3rd notch filter.
Higher the setup, shallower the notch depth and smaller the phase delay you can obtain.
When the applicable filter function is used, parameter value is automatically set.

Pr2.10	4th notch frequency	Range	Unit	Default	Related control mode
		50 to 5000	Hz	5000	P S T F

Caution
Notch frequency is automatically set to the 2nd resonance frequency estimated by the adaptive filter.
The notch filter function will be invalidated by setting up this parameter to "5000".

Pr2.11	4th notch width selection	Range	Unit	Default	Related control mode
		0 to 20	—	2	P S T F

Caution
Set the width of notch at the center frequency of the 4th notch filter.
Higher the setup, larger the notch width you can obtain. Use with default setup in normal operation.
When the applicable filter function is used, parameter value is automatically set.

Note
- A parameter is designated as follows: Class Pr0.00 Parameter No.
- For parameters which No. have a suffix of " * ", changed contents will be validated when you turn on the control power.

Related page
- P.3-34 "Inputs and outputs on connector X4"

Default: [ ]

Pr2.12	4th notch depth selection	Range	Unit	Default	Related control mode			
		0 to 99	—	0	P	S	T	F

Caution

Set the depth of notch at the center frequency of the 4th notch filter.
Higher the setup, shallower the notch depth and smaller the phase delay you can obtain.
When the applicable filter function is used, parameter value is automatically set.

Pr2.13	Selection of damping filter switching	Range	Unit	Default	Related control mode			
		0 to 6	—	0	P			F

Among 4 filters select the filters to be used for damping control.
- When setup value is 0: Up to 2 filters can be used simultaneously.
- When setup value is 1 or 2: Select the filter with external input(s) (VS-SEL1 and/or VS-SEL2).

Setup value	VS-SEL2	VS-SEL1	1st damping	2nd damping	3rd damping	4th damping
[0]	—	—	○	○		
1	—	OFF	○		○	
	—	ON		○		○
2	OFF	OFF	○			
	OFF	ON		○		
	ON	OFF			○	
	ON	ON				○

- With setup value 3: Select the filter with command direction.

Setup value	Position command direction	1st damping	2nd damping	3rd damping	4th damping
3	Positive direction	○		○	
	Negative direction		○		○

Contents of setup values 4 to 6 will differ with enabled/disabled switching of two degree-of-freedom control mode.
- Position control (Two degree-of-freedom control mode disabled).

Setup value	VS-SEL1	1st model	2nd model	3st model	4st model
4	—	○	○	○	
5,6		Same action as set value 0			

- Position control (Two degree-of-freedom control mode enabled).

Setup value	VS-SEL1	1st model	2nd model
4	—	○	○
5	OFF	○	
	ON		○

Setup value	Position command direction	1st model	2nd model
6	Positive direction	○	
	Negative direction		○

- full-close control.

Setup value	1st model	2nd model	3st model	4st model
4 to 6	○	○		

Note
- A parameter is designated as follows: Class Pr0.00 Parameter No.
- For parameters which No. have a suffix of " * ", changed contents will be validated when you turn on the control power.

Related page
- P.3-34 "Inputs and outputs on connector X4"

Default: [ ]

Caution

- Switching of damping controls will be done on the rising edge of the command whose number of pulses/0.125 ms has been changed from 0 while the positioning complete signal is being output. When the damping frequency is increased or disabled, and positioning complete range is large, and pulses are stored in the filter at that time (the area represented by the value of position command before filter subtracted by the value of position command after filter and integrated with the time). Note that since these pulses will be discharged at a higher rate upon switching to return back to the original position, the motor may run at a speed higher than the command speed for a short time.

		Range	Unit	Default	Related control mode
Pr2.14	1st damping frequency	0 to 3000	0.1 Hz	0	P F
Pr2.16	2nd damping frequency	0 to 3000	0.1 Hz	0	P F
Pr2.18	3rd damping frequency	0 to 3000	0.1 Hz	0	P F
Pr2.20	4th damping frequency	0 to 3000	0.1 Hz	0	P F

You can set up the 1st to 4th damping frequency of the damping control which suppress vibration at the load edge.
The driver measures vibration at load edge. Setup unit is 0.1[Hz].
The setup frequency is 1.0 to 300.0[Hz]. Setup of 0 to 9 becomes invalid.

Related page Refer to P.5-37, "Suppression of Machine Resonance" as well before using this parameter.

		Range	Unit	Default	Related control mode
Pr2.15	1st damping filter setup	0 to 1500	0.1 Hz	0	P F
Pr2.17	2nd damping filter setup	0 to 1500	0.1 Hz	0	P F
Pr2.19	3rd damping filter setup	0 to 1500	0.1 Hz	0	P F
Pr2.21	4th damping filter setup	0 to 1500	0.1 Hz	0	P F

Caution

If torque saturation occurs with damping frequency (1st- 4th) enabled, decrease the setup value, or if the operation is slow, increase it. Usually set it to 0.

The maximum setup value is internally limited to the corresponding damping frequency or 3000 - damping frequency, whichever is smaller.

Related page Refer to P.5-41, "Damping control" as well before using this parameter.

Note

- A parameter is designated as follows: Class Pr0.00 Parameter No.
- For parameters which No. have a suffix of " * ", changed contents will be validated when you turn on the control power.

Related page
- P.3-34 "Inputs and outputs on connector X4"

Default: [ ]

Pr2.22	Command smoothing filter	Range	Unit	Default	Related control mode			
		0 to 10000	0.1 ms	A,B,C-frame: 92 D to H-frame: 139	P			F

[Position control mode]
- With previous control (Pr6.47 bit0 = 0)
  Set the time constant of the 1st delay filter in response to the positional command.
- In the two-degree-of-freedom control mode (Pr6.47 bit0 = 1)
  Time constant of the command response filter
  The maximum value is limited by 2000 (= 200.0 ms).*

[Speed control mode]
- With previous control (Pr6.47 bit0 = 0)
  This setting is ignored.
- In the two-degree-of-freedom control mode (Pr6.47 bit0 = 1)
  Time constant of the command response filter
  The maximum value is limited by 640 (= 64.0 ms).*

Related page For Two-degree-of-freedom control mode, refer to Pr6.47 (P.4-81).

[Full-closed control mode]
- Always set the time constant of the 1st delay filter in response to the positional command.

* The value of the parameter is not limited but the value to be applied to driver is limited. Set attenuation term in Pr6.49 [Set attenuation term of command filter/adjustment filter].

- When a square wave command for the target speed Vc is applied, set up the time constant of the 1st delay filter as shown in the figure below.

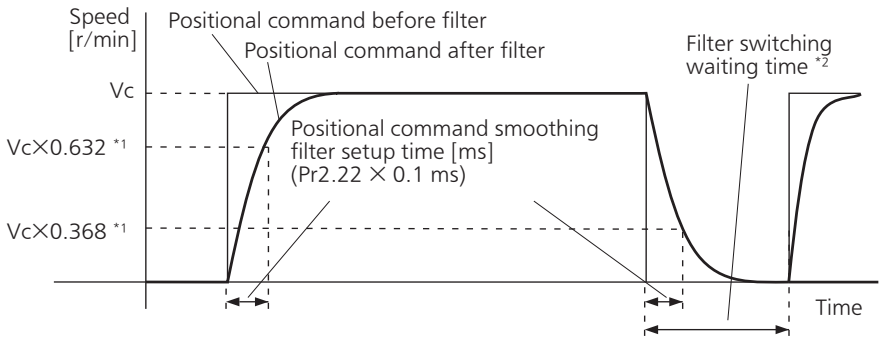

*1 Actual filter time constant (setup value × 0.1 ms) has the maximum absolute error of 0.4 ms for a time constant below 100 ms and the maximum relative error of 0.2 % for a time constant 20 ms or more.

*2 Switching of Pr2.22 Positional command smoothing filter is performed on the rising edge of the command with the number of command pulses/0.125 ms is changed from 0 to a value other than 0 while the positioning complete is being output.
If the filter time constant is decreased and positioning complete range is increased, and a many number of plusses are accumulated in the filter (the area equivalent of "value of positional command filter - value of positional command after filter" integrated over the time), at the time of switching, these pulses are discharged at a higher rate, causing the motor to return to the previous position - the motor runs at a speed higher than the command speed for a short time.

*3 Even if Pr2.22 Positional command smoothing filter is changed, it is not applied immediately. If the switching as described in *2 occurs during this delay time, the change of Pr2.22 will be suspended.

Note
- A parameter is designated as follows: Class Pr0.00 Parameter No.
- For parameters which No. have a suffix of " * ", changed contents will be validated when you turn on the control power.

Related page • P.3-34 "Inputs and outputs on connector X4"

Default: [ ]

Pr2.23	Command FIR filter	Range	Unit	Default	Related control mode
		0 to 10000	0.1 ms	10	P S F

[Position control mode / Full-closed control mode]
- Set up the time constant of FIR filter in response to the command.

[Speed control mode]
- With previous control (Pr6.47 bit0 = 0)
  This setting is ignored.
- In the two-degree-of-freedom control mode (Pr6.47 bit0 = 1)
  Time constant of the command response filter
  The maximum value is limited by 640 (= 64.0 ms).*

Related page: For Two-degree-of-freedom control mode, refer to Pr6.47 (P.4-79).

- When a square wave command for the target speed Vc is applied, set up the time constant of the 1st delay filter as shown in the figure below.

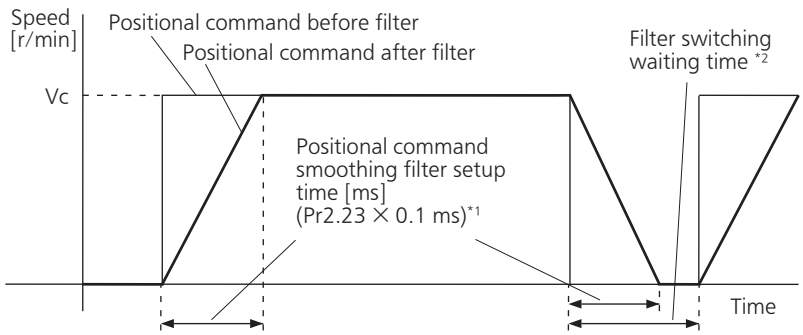

*1 The actual average travel time (setup value × 0.1 ms) has the maximum absolute error of 0.2 ms for a time constant below 10 ms and the maximum relative error of 1.6 % for a time constant 10 ms or more.

*2 When changing Pr2.23 Command FIR filter, stop the command pulse and wait until the filter switching wait time has elapsed. The filter switching wait time is the setup value × 0.1 ms + 0.25 ms when the setup time is 10 ms, and setup value × 0.1 ms × 1.05 when the setup time is 10 ms or more. If Pr2.23 is changed while the command pulse is being input, the change is not reflected until the command pulse-less state has continued for the filter switching wait time.

*3 Even if Pr2.23 Command FIR filter is changed, it is not applied immediately. If the switching as described in *2 occurs during this delay time, the change of Pr2.23 will be suspended.

Pr2.24	5th notch frequency	Range	Unit	Default	Related control mode
		50 to 5000	Hz	5000	P S T F

Set the center frequency of the 5th notch filter.

Caution: The notch filter function will be invalidated by setting up this parameter to "5000".

Pr2.25	5th notch width selection	Range	Unit	Default	Related control mode
		0 to 20	—	2	P S T F

Set the width of notch at the center frequency of the 5th notch filter.

Caution: Higher the setup, larger the notch width you can obtain. Use with default setup in normal operation.

Note
- A parameter is designated as follows: Class Pr0.00 Parameter No.
- For parameters which No. have a suffix of " * ", changed contents will be validated when you turn on the control power.

Related page
- P.3-34 "Inputs and outputs on connector X4"

Default: [ ]

Pr2.26	5th notch depth selection	Range	Unit	Default	Related control mode			
		0 to 99	—	0	P	S	T	F

Set the depth of notch at the center frequency of the 5th notch filter.

Caution Higher the setup, shallower the notch depth and smaller the phase delay you can obtain.

Pr2.27	1st vibration control width setting	Range	Unit	Default	Related control mode			
		0 to 1000	—	0	P			F

To conduct fine tuning of 1st vibration suppression control function.

Pr2.28	2nd vibration control width setting	Range	Unit	Default	Related control mode			
		0 to 1000	—	0	P			F

To conduct fine tuning of 2nd vibration suppression control function.

Pr2.29	3rd vibration control width setting	Range	Unit	Default	Related control mode			
		0 to 1000	—	0	P			F

To conduct fine tuning of 3rd vibration suppression control function.

Pr2.30	4th vibration control width setting	Range	Unit	Default	Related control mode			
		0 to 1000	—	0	P			F

To conduct fine tuning of 4th vibration suppression control function.

Pr2.31	For manufacturer use	Range	Unit	Default	Related control mode			
		—	—	0				

Pr2.32	For manufacturer use	Range	Unit	Default	Related control mode			
		—	—	0				

Pr2.33	For manufacturer use	Range	Unit	Default	Related control mode			
		—	—	0				

Pr2.34	For manufacturer use	Range	Unit	Default	Related control mode			
		—	—	0				

Pr2.35	For manufacturer use	Range	Unit	Default	Related control mode			
		—	—	0				

Pr2.36	For manufacturer use	Range	Unit	Default	Related control mode			
		—	—	0				

Pr2.37	For manufacturer' s use	Range	Unit	Default	Related control mode			
		—	—	0				

Pleses fixed to 0.

Note
- A parameter is designated as follows: Class Pr0.00 Parameter No.
- For parameters which No. have a suffix of " * ", changed contents will be validated when you turn on the control power.

Related page
- P.3-34 "Inputs and outputs on connector X4"

Default: [ ]

Pr3.00	Speed setup, Internal/External switching	Range	Unit	Default	Related control mode			
		0 to 3	—	Basic type:1 Communication type:1 Multifunction typ:0		S		

This driver is equipped with internal speed setup function so that you can control the speed with contact inputs only.

Setup value	Speed setup method
[0]	Analog speed command (SPR)
1	Internal speed command 1st to 4th speed (Pr3.04 to Pr3.07)
2	Internal speed command 1st to 3rd speed (Pr3.04 to Pr3.06), Analog speed command (SPR)
3	Internal speed command 1st to 8th speed (Pr3.04 to Pr3.11)

<Relationship between Pr3.00 Internal/external switching speed setup and the internal command speed selection 1, 2 and 3, and speed command to be selected>

Setup value	Selection 1 of internal command speed (INTSPD1)	Selection 2 of internal command speed (INTSPD2)	Selection 3 of internal command speed (INTSPD3)	Selection of Speed command
1	OFF	OFF	No effect	1st speed
	ON	OFF		2nd speed
	OFF	ON		3rd speed
	ON	ON		4th speed
2	OFF	OFF	No effect	1st speed
	ON	OFF		2nd speed
	OFF	ON		3rd speed
	ON	ON		Analog speed command
3	The same as Pr3.00=1		OFF	1st to 4th speed
	OFF	OFF	ON	5th speed
	ON	OFF	ON	6th speed
	OFF	ON	ON	7th speed
	ON	ON	ON	8th speed

Caution

Internal command speed switching pattern should be so arranged as shown below that single input signals are selected alternately. If 2 or more input signals are selected simultaneously, unspecified internal command speed may be advertently selected, whose setting value and acceleration/deceleration setting will cause unexpected operation.

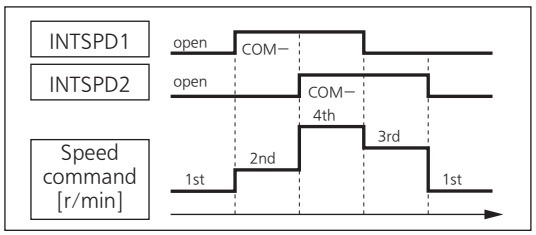

Example 1) When Pr3.00=1 or 2

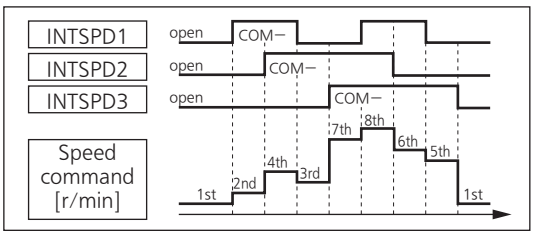

Example 2) When Pr3.00=3

Pr3.01	Speed command rotational direction selection	Range	Unit	Default	Related control mode			
		0 to 1	—	0		S		

Select the Positive/Negative direction specifying method.

Setup value	Select speed command sign (1st to 8th speed)	Speed command direction (VC-SIGN)	Position command direction
[0]	+	No effect	Positive direction
	—	No effect	Negative direction
1	Sign has no effect.	OFF	Positive direction
	Sign has no effect.	ON	Negative direction

Default: [ ]

Pr3.02	Input gain of speed command	Range	Unit	Default	Related control mode
		10 to 2000	(r/min)/V	500	S T

Based on the voltage applied to the analog speed command (SPR), set up the conversion gain to motor command speed.

- You can set up a "slope" of the relation between the command input voltage and the motor speed, with Pr3.02.
- Default is set to Pr3.02=500 [r/min], hence input of 6V becomes 3000 r/min.

Caution

1. Do not apply more than ± 10 V to the speed command input (SPR).
2. When you compose a position loop outside of the driver while you use the driver in velocity control mode, the setup of Pr3.02 gives larger variance to the overall servo system.
   Pay an extra attention to oscillation caused by larger setup of Pr3.02.

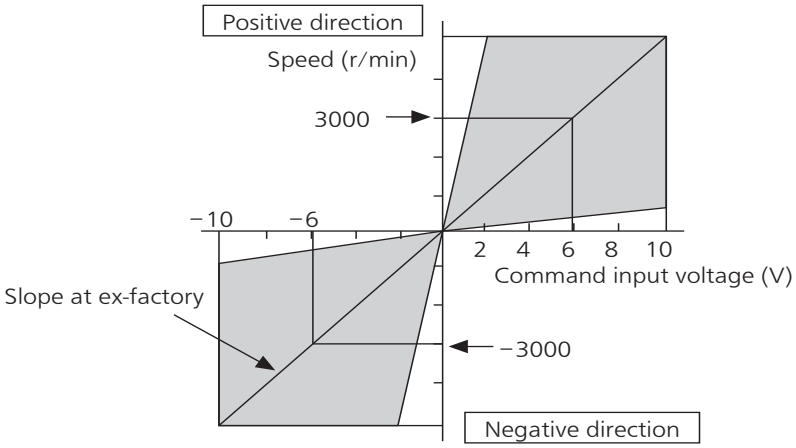

Pr3.03	Reversal of speed command input	Range	Unit	Default	Related control mode
		0 to 1	—	1	S

Specify the polarity of the voltage applied to the analog speed command (SPR).

Setup value	Motor rotating direction	
0	Non-reversal	"+Voltage" → "Positive direction" , "−Voltage" → "Negative direction"
[1]	Reversal	"+Voltage" → "Negative direction" , "−Voltage" → "Positive direction"

Note

Default of this parameter is 1, and the motor turns to CW with (+) signal, this has compatibility to existing MINAS series driver.

Caution

When you compose the servo drive system with this driver set to velocity control mode and external positioning unit, the motor might perform an abnormal action if the polarity of the speed command signal from the unit and the polarity of this parameter setup does not match.

Note

- A parameter is designated as follows: Class Pr0.00 Parameter No.
- For parameters which No. have a suffix of " * ", changed contents will be validated when you turn on the control power.

Related page

- P.3-34 "Inputs and outputs on connector X4"

Default: [ ]

		Range	Unit	Default	Related control mode
Pr3.04	1st speed of speed setup	−20000 to 20000	r/min	0	S
Pr3.05	2nd speed of speed setup	−20000 to 20000	r/min	0	S
Pr3.06	3rd speed of speed setup	−20000 to 20000	r/min	0	S
Pr3.07	4th speed of speed setup	−20000 to 20000	r/min	0	S
Pr3.08	5th speed of speed setup	−20000 to 20000	r/min	0	S
Pr3.09	6th speed of speed setup	−20000 to 20000	r/min	0	S
Pr3.10	7th speed of speed setup	−20000 to 20000	r/min	0	S
Pr3.11	8th speed of speed setup	−20000 to 20000	r/min	0	S

Set up internal command speeds, 1st to 8th.

		Range	Unit	Default	Related control mode
Pr3.12	Acceleration time setup	0 to 10000	ms/ (1000 r/min)	0	S
Pr3.13	Deceleration time setup	0 to 10000	ms/ (1000 r/min)	0	S

Set up acceleration/deceleration processing time in response to the speed command input.
Set the time required for the speed command (stepwise input) to reach 1000 r/min to Pr3.12 Acceleration time setup. Also set the time required for the speed command to reach from 1000 r/min to 0 r/min, to Pr3.13 Deceleration time setup.
Assuming that the target value of the speed command is Vc(r/min), the time required for acceleration/deceleration can be computed from the formula shown below.

Acceleration time (ms) = Vc/1000 × Pr3.12 × 1 ms
Deceleration time (ms) = Vc/1000 × Pr3.13 × 1 ms

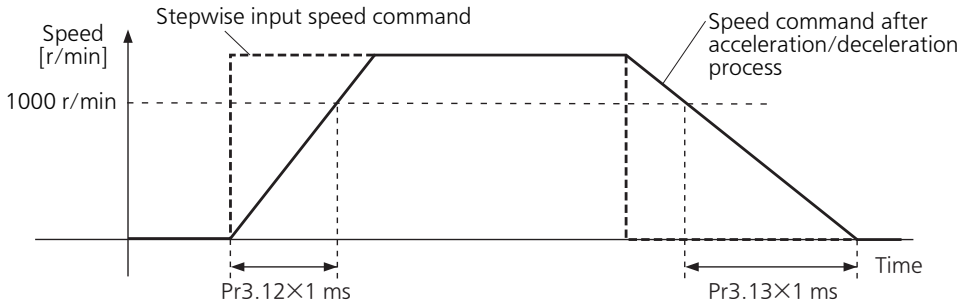

Caution When the speed difference between the speed command being selected and the speed command after acceleration/deceleration indicates the same direction as that of the speed command applied after acceleration/deceleration, result is “acceleration” and if the reverse direction, the result is “deceleration” .

Note
- A parameter is designated as follows: Class Pr0.00 Parameter No.
- For parameters which No. have a suffix of “ * ”, changed contents will be validated when you turn on the control power.

Related page
- P.3-34 “Inputs and outputs on connector X4”

Default: [ ]

Pr3.14	Sigmoid acceleration/ deceleration time setup	Range	Unit	Default	Related control mode
		0 to 1000	ms	0	S

Set S-curve time for acceleration/deceleration process when the speed command is applied.
According to Pr3.12 Acceleration time setup and Pr3.13 Deceleration time setup, set up sigmoid time with time width centering the inflection point of acceleration/deceleration.

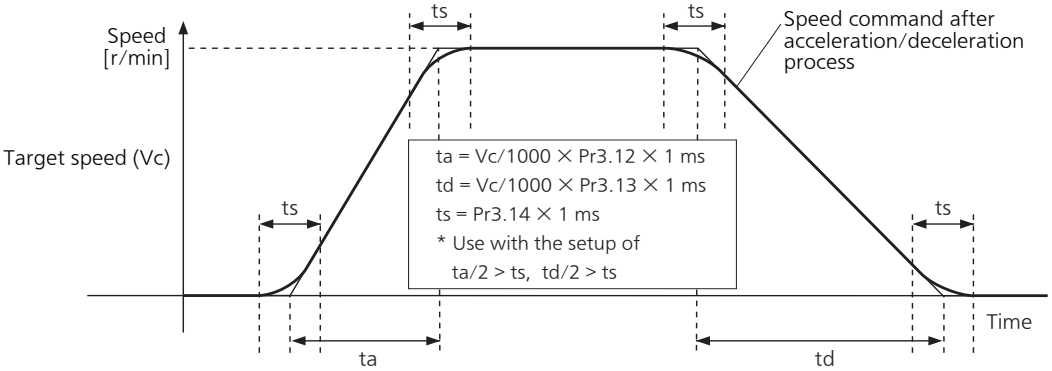

Pr3.15	Speed zero-clamp function selection	Range	Unit	Default	Related control mode
		0 to 3	—	0	S T

You can set up the function of the speed zero clamp input.

Setup value	Function of ZEROSPD (Pin-26)
[0]	Invalid: Speed zero-clamp input is ignored.
1	Speed command is forced to 0 when the speed zero clamp (ZEROSPD) input signal is turned ON *1.
2	Speed command is forced to 0 when the speed zero clamp (ZEROSPD) input signal is turned ON *1. And when the actual motor speed drops to Pr3.16 Speed zero clamp level or below, the position control is selected and servo lock is activated at this point. The fundamental operations except for this function (switching to the position control) are identical to those when setup value is 1.
3	When the speed zero clamp(ZEROSPD) input signal is turned ON*1 and speed command is (Pr3.16 speed zero clamp level -10r/min), the position control is selected and servo lock is activated at this point.

Note

*1 The default logic is Normal Close: the function is enabled while the terminal is open (input signal is ON). Refer to P.3-41 Control input.

Pr3.16	Speed zero clamp level	Range	Unit	Default	Related control mode
		10 to 20000	r/min	30	S T

Select the timing at which the position control is activated as the Pr3.15 Speed zero-clamp function selection is set to 2.

Default: [ ]

Pr3.17	Selection of torque command	Range	Unit	Default	Related control mode
		0 to 2	—	0	T

You can select the input of the torque command and the speed limit.

Setup value	Torque command input	Velocity limit input
[0]	Analog input 1 *1 (AI1, 16-bit resolution)	Parameter value (Pr3.25)
1	Analog input 2 (AI2, 12-bit resolution)	Analog input 1 (AI1, 16-bit resolution)
2	Analog input 1 *1 (AI1, 16-bit resolution)	Parameter value (Pr3.21, Pr3.22)

*1 For Pr0.01 Control mode setup = 5 (velocity/torque control), the torque command input is the analog input 2 (AI2, 12-bit resolution).

Pr3.18	Torque command direction selection	Range	Unit	Default	Related control mode
		0 to 1	—	0	T

Select the direction positive/negative direction of torque command.

Setup value	Designation
[0]	Specify the direction with the sign of torque command. Example: Torque command input (+) for positive direction, (−) for negative direction
1	Specify the direction with torque command sign (TC-SIGN). OFF: Positive direction, ON: Negative direction

Pr3.19	Input gain of torque command	Range	Unit	Default	Related control mode
		10 to 100	0.1 V/100 %	30	T

Based on the voltage (V) applied to the analog torque command (TRQR), set up the conversion gain to torque command (%).

- Unit of the setup value is [0.1 V/100 %] and set up input voltage necessary to produce the rated torque.
- Default setup of 30 represents 3 V/100 %.

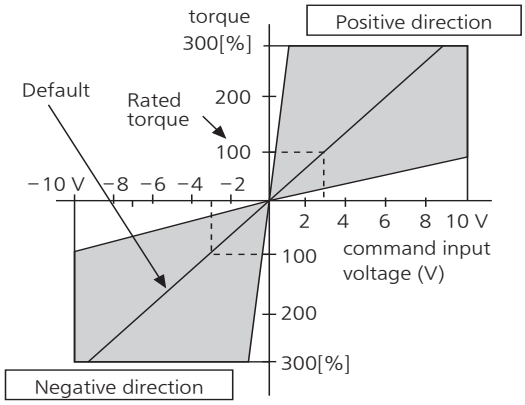

Pr3.20	Input reversal of torque command	Range	Unit	Default	Related control mode
		0 to 1	—	0	T

Set up the polarity of the voltage applied to the analog torque command (TRQR).

Setup value	Direction of motor output torque	
[0]	Non-reversal	"+Voltage" → "Positive direction" , "−Voltage" → "Negative direction"
1	Reversal	"+Voltage" → "Negative direction" , "−Voltage" → "Positive direction"

Default: [ ]

Pr3.21	Speed limit value 1	Range	Unit	Default	Related control mode			
		0 to 20000	r/min	0			T	

Set up the speed limit used for torque controlling.
During the torque controlling, the speed set by the speed limit value cannot be exceeded.
When Pr3.17 = 2, the speed limit is applied upon receiving positive direction command.

Pr3.22	Speed limit value 2	Range	Unit	Default	Related control mode			
		0 to 20000	r/min	0			T	

Speed limit value of negative direction command when Pr3.17 = 2.

Pr3.17	Pr3.21	Pr3.22	Pr3.15	Speed zero clamp (ZEROSPD)	Analog torque command direction	Speed limit value
0	0 to 20000	No effect	0	No effect	No effect	Pr3.21 setup value
			1 to 2	OFF		Pr3.21 setup value
				ON		0
2	0 to 20000	0 to 20000	0	No effect	Positive direction	Pr3.21 setup value
					Negative direction	Pr3.22 setup value
	0 to 20000	0 to 20000	1 to 2	OFF	Positive direction	Pr3.21 setup value
					Negative direction	Pr3.22 setup value
	0 to 20000	0 to 20000	1 to 2	ON	No effect	0

Pr3.23 *	External scale selection	Range	Unit	Default	Related control mode			
		0 to 6	—	0	P	S	T	F

Select the type of external scale.

Setup value	External scale type	Compatible scale	Compatible speed
[0]	A,B phase output type *1	External scale of A, B phase output type	to 4 Mpps (after quadrupled)
1	Serial communication type (incremental version) *1	Please check the website of our company and [7. Supplement 8.Optionas List of Peripheral Equipments] for the available external displacement sensor.	to 4 Gpulse/s
2	Serial communication type (absolute version) *1		to 4 Gpulse/s
3 to 6	For manufacturer use	—	—

*1 Connect the external scale so that it increments the count as the motor shaft turns positive direction, and decrements as the shaft turns negative direction. If this connection arrangement is impossible due to installation condition, etc., use the count reverse function of Pr3.26 Reversal of direction of external scale.

Caution When the setup value is 1 or 2 while the A, B phase output type is connected, Err50.0 External scale wiring error protection occurs, and if the setup value is 0 while the serial communication type is connected, Err55.0, 1 or 2 A phase, B phase or Z phase wiring error protection will occur.

Note
- A parameter is designated as follows: Class Pr0.00 Parameter No.
- For parameters which No. have a suffix of " * ", changed contents will be validated when you turn on the control power.

Related page
- P.3-34 "Inputs and outputs on connector X4"

Default: [ ]

Pr3.24 *	Numerator of external scale division	Range	Unit	Default	Related control mode			
		0 to 8388608	—	0				F

Set up the numerator of the external scale dividing setup.
When setup value = 0, encoder resolution is used as numerator of the division.

Pr3.25 *	Denominator of external scale division	Range	Unit	Default	Related control mode			
		1 to 8388608	—	10000				F

- Check the number of encoder feedback pluses per one motor revolution and the number of external scale pulses per one motor revolution, and then set up the numerator of external scale division (Pr3.24) and the denominator of external scale division (Pr3.25) to establish the expression shown below.
- With Pr3.24 set at 0, the encoder resolution is automatically used as numerator.

Example: When ball screw pitch is 10 mm, scale 0.1 μm/pulse, encoder resolution 23 bits (8388608 pulses);

$$\frac{\text{Pr3.24}\ \boxed{8388608}}{\text{Pr3.25}\ \boxed{100000}} = \frac{\text{Encoder resolution per one motor revolution [pulse]}}{\text{External scale resolution per one motor revolution [pulse]}}$$

Caution: If this ratio is wrong, the difference between the position calculated based on the encoder pulses and the position calculated based on the external scale pulses becomes large over a long travel distance and will activate the excess hybrid deviation error protection.

Pr3.26 *	Reversal of direction of external scale	Range	Unit	Default	Related control mode			
		0 to 3	—	0	P	S	T	F

Reverse the direction of external scale, feedback counter.

Setup value	Content
[0]	Count value of external scale can be used as it is.
1	Sign (positive/negative) of count value of external scale should be inverted.
2 to 3	For manufacturer use

Note: For setting method of this parameter, refer to P.3-12 Full closed control mode.

Pr3.27 *	External scale Z phase disconnection detection disable	Range	Unit	Default	Related control mode			
		0 to 1	—	0				F

Enable/disable Z-phase disconnection detection when A, B phase output type external scale is used.

Setup value	Content
[0]	Valid
1	Invalid

Pr3.28 *	Hybrid deviation excess setup	Range	Unit	Default	Related control mode			
		1 to 134217728	Command unit	16000				F

You can setup the permissible gap (hybrid deviation) between the present motor position and the present external scale position.

Default: [ ]

Pr3.29 *	Hybrid deviation clear setup	Range	Unit	Default	Related control mode			
		0 to 100	Revolution	0				F

As the motor turns the number of revolutions set by this parameter, the hybrid deviation is cleared to 0. No clearing is made with setup value 0.

<Hybrid deviation clear feature>
As the motor reaches the number of revolutions set by Pr3.29 Hybrid deviation clear setup, clear the hybrid deviation to 0. This feature allows the motor to be used in an application where hybrid deviation accumulate due to slippage, etc.

Note

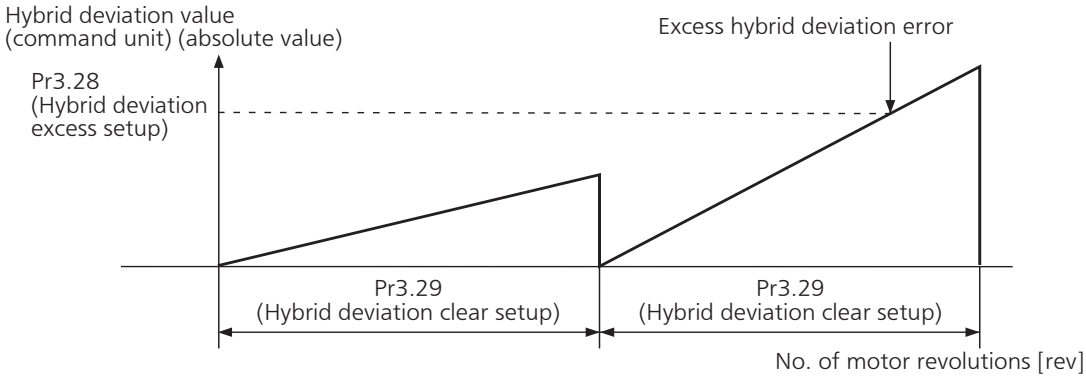

Note: Revolution in the hybrid deviation clear setup is counted by using encoder feedback pulses.

Caution

To use the hybrid deviation clear, be sure to set Pr3.29 Hybrid deviation clear setup to the appropriate value. If the setup value is too small with respect to the value of Pr3.28 Hybrid deviation excess setup, abnormal operation due to e.g. external scale connection error cannot be protected.
Limit sensor should be used to assure safety.

Pr4.00 *	SI1 input selection	Range	Unit	Default	Related control mode			
		0 to 00FFFFFFh	—	00828282h (8553090)	P	S	T	F

Assign functions to SI1 inputs.These parameters are presented in hexadecimals. *5
Hexadecimal presentation is followed by a specific control mode designation.
0 0 – – – – * * h : position/full-closed control
0 0 – – * * – – h : velocity control
0 0 * * – – – – h : torque control
Replace * * with the function number.
For the function number see the table below. Logical setup is also a function number.

Title	Symbol	Setup value	
		Normal Open	Normal Close
Invalid	—	00h	Do not setup.
Positive direction over-travel inhibition input	POT	01h	81h
Negative direction over-travel inhibition input	NOT	02h	82h
Servo-ON input *1	SRV-ON	03h	83h
Alarm clear input	A-CLR	04h	Do not setup.
Control mode switching input *2	C-MODE	05h	85h
Gain switching input	GAIN	06h	86h
Deviation counter clear input *3	CL	07h	Do not setup.
Command pulse inhibition input *4	INH	08h	88h
Torque limit switching input	TL-SEL	09h	89h
Damping control switching input 1	VS-SEL1	0Ah	8Ah
Damping control switching input 2	VS-SEL2	0Bh	8Bh
Electronic gear switching input 1	DIV1	0Ch	8Ch
Electronic gear switching input 2	DIV2	0Dh	8Dh
Selection 1 input of internal command speed	INTSPD1	0Eh	8Eh
Selection 2 input of internal command speed	INTSPD2	0Fh	8Fh
Selection 3 input of internal command speed	INTSPD3	10h	90h
Speed zero clamp input	ZEROSPD	11h	91h
Speed command sign input	VC-SIGN	12h	92h
Torque command sign input	TC-SIGN	13h	93h
Forced alarm input	E-STOP	14h	94h
Inertia ratio switching input	J-SEL	15h	95h
Dynamic brake switching input*5	DB-SEL	16h	Do not setup.

Note For input pin assignment with default setting, refer to P.3-41 Control input.

Related page P.3-55

<Example of change>

To change the default setting "Negative direction over-travel inhabitation input" (in all modes) for Normal Close to for Normal Open, set the input to 00020202h.

* For easier setting, use the setup support software PANATERM.

Caution

- Do not setup to a value other than that specified in the table.
- Do not assign specific function to 2 or more signals. Duplicated assignment will cause Err33.0 I/F input multiple assignment error 1 or Err33.1 I/F input multiple assignment error 2.
- When measuring frequency characteristics of PANATERM, as it will automatically switchover to position velocity control inside the driver, please set the same set value for input signal of velocity control to be made abled during the measurement, to the set value for position control.
- Note that the setup values are displayed in decimal on the front panel.

*1 Servo-on input signal (SRV-ON) must be used to enable servo-on.

*2 When using the control mode switch input (C-MODE), all control modes need to be set. If configuration is made only for 1 or 2 modes, Err33.2 "I/F input function number error 1 " or Err33.3 "I/F input function number error 2" occurs.
- The control input pin set to invalid state does not affect any operation.
- Function (servo-on input, alarm clear, etc.) to be used in multiple control modes must be assigned to the same pin with correct logical arrangement. Incorrect setting will cause Err33.0 I/F input multiple assignment error 1 or Err33.1 I/F input multiple assignment error 2.

*3 Deviation counter clear input (CL) can be assigned only to SI7 input. Wrong assignment will cause Err33.6 Counter clear assignment error.

*4 Command pulse inhibition input (INH) can only be assigned to SI10 inputs. If the input is assigned to other than that,Err33.7 "Command pulse input inhibition input " occurs.

*5 When using the Dynamic brake switch input, all control modes need to set after set Pr 6.36(Dynamic brake operation input) =1.If configurationis mode only for 1 or 2 mode, Err33.2" I/F input function number error 1" or Err33.3" I/F input function number error 2" occurs.For more information.

Pr4.01 *	SI2 input selection	Range	Unit	Default	Related control mode			
		0 to 00FFFFFFh	—	00818181h (8487297)	P	S	T	F

Pr4.02 *	SI3 input selection	Range	Unit	Default	Related control mode			
		0 to 00FFFFFFh	—	0091910Ah (9539850)	P	S	T	F

Pr4.03 *	SI4 input selection	Range	Unit	Default	Related control mode			
		0 to 00FFFFFFh	—	00060606h (394758)	P	S	T	F

Pr4.04 *	SI5 input selection	Range	Unit	Default	Related control mode			
		0 to 00FFFFFFh	—	0000100Ch (4108)	P	S	T	F

Pr4.05 *	SI6 input selection	Range	Unit	Default	Related control mode			
		0 to 00FFFFFFh	—	00030303h (197379)	P	S	T	F

Pr4.06 *	SI7 input selection	Range	Unit	Default	Related control mode			
		0 to 00FFFFFFh	—	00000f07h (3847)	P	S	T	F

Caution Deviation counter clear (CL) can be set up only with this parameter. If any other parameter is used for this purpose, Err33.6 Counter clear assignment error will be issued.

Pr4.07 *	SI8 input selection	Range	Unit	Default	Related control mode			
		0 to 00FFFFFFh	—	00040404h (263172)	P	S	T	F

Pr4.08 *	SI9 input selection	Range	Unit	Default	Related control mode			
		0 to 00FFFFFFh	—	00050505h (328965)	P	S	T	F

Pr4.09 *	SI10 input selection	Range	Unit	Default	Related control mode			
		0 to 00FFFFFFh	—	00000E88h (3720)	P	S	T	F

Assign functions to SI2 to SI10 inputs.
These parameters are presented in hexadecimals.
Setup procedure is the same as described for Pr4.00.

Note For input pin assignment with default setting, also refer to P.3-41 Control input.

Caution Command pulse inhibition input (INH) can be setup only with this parameter. If any other parameter is used for this purpose, Err33.7 INH assignment error will be issued.

Note
- A parameter is designated as follows: Class Pr0.00 Parameter No.
- For parameters which No. have a suffix of " * ", changed contents will be validated when you turn on the control power.

Related page
- P.3-34 "Inputs and outputs on connector X4"

Default: [ ]

Pr4.10 *	SO1 output selection	Range	Unit	Default	Related control mode			
		0 to 00FFFFFFh	—	00030303h (197379)	P	S	T	F

Assign functions to SO1 outputs.
These parameters are presented in hexadecimals. *1
Hexadecimal presentation is followed by a specific control mode designation.
0 0 – – – – * * h : position/full-closed control
0 0 – – * * – – h : velocity control
0 0 * * – – – – h : torque control
Replace * * with the function number.
For the function number see the table below. Logical setup is also a function number.

Setup value	Title	Symbol
00h	Invalid	—
01h	Servo alarm output	ALM
02h	Servo-Ready output	S-RDY
03h	External brake release signal	BRK-OFF
04h	Positioning complete output	INP
05h	At-speed output	AT-SPEED
06h	Torque in-limit signal output	TLC
07h	Zero-speed detection output signal	ZSP
08h	Speed coincidence output	V-COIN
09h	Alarm output 1	WARN1
0Ah	Alarm output 2	WARN2
0Bh	Positional command ON/OFF output	P-CMD
0Ch	Positioning complete 2	INP2
0Dh	Speed in-limit output	V-LIMIT
0Eh	Alarm attribute output	ALM-ATB
0Fh	Speed command ON/OFF output	V-CMD
10h	Servo on status output	SRV-ST

Note

For output pin assignment with default setting, also refer to P.3-49 Output signals (common) and their functions.

Related page P.3-57

<Example of change>
To change the default setting "External brake release signal" (in all modes) to "Alarm output 1" , set the input to 00090909h.

* For easier setting, use the setup support software PANATERM.

- Same function can be assigned to 2 or more output signals.
- Control output pin set to invalid always has the output transistor turned OFF.
- Do not change the setup value shown in the table.

Caution *1 Note that the setup values are displayed in decimal on the front panel.

Pr4.11 *	SO2 output selection	Range	Unit	Default	Related control mode			
		0 to 00FFFFFFh	—	00020202h (131586)	P	S	T	F

Pr4.12 *	SO3 output selection	Range	Unit	Default	Related control mode			
		0 to 00FFFFFFh	—	00010101h (65793)	P	S	T	F

Pr4.13 *	SO4 output selection	Range	Unit	Default	Related control mode			
		0 to 00FFFFFFh	—	00050504h (328964)	P	S	T	F

Pr4.14 *	SO5 output selection	Range	Unit	Default	Related control mode			
		0 to 00FFFFFFh	—	00070707h (460551)	P	S	T	F

Pr4.15 *	SO6 output selection	Range	Unit	Default	Related control mode			
		0 to 00FFFFFFh	—	00060606h (394758)	P	S	T	F

Assign functions to SO2 to SO6 outputs.
These parameters are presented in hexadecimals.
Setup procedure is the same as described for Pr4.10.

Default: [ ]

Pr4.16	Type of analog monitor 1	Range	Unit	Default	Related control mode			
		0 to 28	—	0	P	S	T	F

Select the type of monitor for analog monitor 1. *See the table shown on the next page.

Pr4.17	Analog monitor 1 output gain	Range	Unit	Default	Related control mode			
		0 to 214748364	[Monitor unit in Pr4.16] / V	0	P	S	T	F

Set up the output gain of analog monitor 1.
For Pr4.16 = 0 Motor speed, 1 V is output at the motor speed [r/min] = Pr4.17 setup value.

Pr4.18	Type of analog monitor 2	Range	Unit	Default	Related control mode			
		0 to 28	—	4	P	S	T	F

Select the type of monitor for analog monitor 2. *See the table shown on the next page.

Pr4.19	Analog monitor 2 output gain	Range	Unit	Default	Related control mode			
		0 to 214748364	[Monitor unit in Pr4.16] / V	0	P	S	T	F

Set up the output gain of analog monitor 2.
For Pr4.18 = 4 Torque command, 1 V is output at the torque command [%] = Pr4.19 setup value.

Pr4.20	For manufacturer's use	Range	Unit	Default	Related control mode			
		—	—	0				

Plese fixed to 0.

Pr4.16/Pr4.18	Type of monitor	Unit	Output gain for setting Pr4.17/Pr4.19 = 0
0	Motor speed	r/min	500
1	Positional command speed *4	r/min	500
2	Internal positional command speed *4	r/min	500
3	Velocity control command	r/min	500
4	Torque command	%	33
5	Command positional deviation *5	pulse (Command unit)	3000
6	Encoder positional deviation *5	pulse (Encoder unit)	3000
7	Full-closed deviation *5	pulse (External scale unit)	3000
8	Hybrid deviation	pulse (Command unit)	3000
9	Voltage across PN	V	80
10	Regenerative load factor	%	33
11	Overload factor	%	33
12	Positive direction torque limit	%	33
13	Negative direction torque limit	%	33
14	Speed limit value	r/min	500
15	Inertia ratio	%	500
16	Analog input 1 *2	V	1

Default: [ ]

Pr4.16/Pr4.18	Type of monitor	Unit	Output gain for setting Pr4.17/Pr4.19 = 0
17	Analog input 2 *2	V	1
18	Analog input 3 *2	V	1
19	Encoder temperature *3	℃	10
20	Driver temperature	℃	10
21	Encoder single-turn data *1	pulse (Encoder unit)	110000
23	Command input state	0: No command 1: With command	*6
24	Gain selection state	0: 1st gain selected 1: 2nd and 3rd gain selected	*6
25	Positioning complete state	0: Positioning not completed 1: Positioning completed	*6
26	Alarm triggered state	0: Alarm not triggered 1: Alarm triggered	*6
27	Motor power consumption	W	100
28	Motor power electrical energy	Wh	100

*1 The encoder rotation data CCW is always positive value regardless of Pr0.00 Rotational direction setup. The direction of other monitor data basically follows Pr0.00 Rotational direction setup.
*2 Analog inputs 1, 2 and 3 always output terminal voltage regardless of usage of analog input function. Only for basic type is not provided with analog inputs.
*3 For temperature information from the encoder, a value appears only when 23-bit absolute encoder is used. For other encoders, “0 ”is always output.
*4 For the command pulse input, the speed before the command filter (smoothing, FIR filter) is defined as positional command speed and speed after filter is defined as internal command speed.

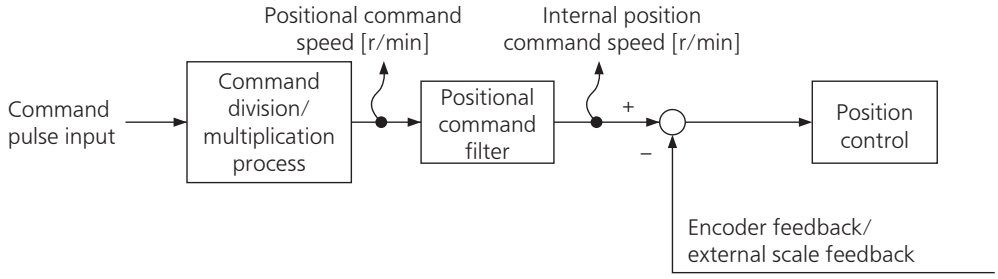

*5 Position command deviation is the deviation from the command pulse input. Encoder position deviation/full-closed position deviation is the deviation at the input portion of position control. The following figure shows details.

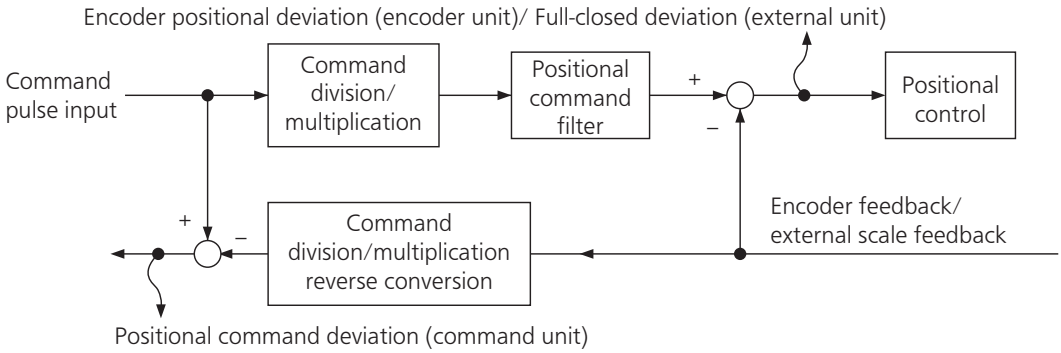

*6 Regardless of the setting Pr 4.17 and Pr 4.19, output gain become 0V in unit 0 or become 5V in unit 1.

Default: [ ]

Pr4.21	Analog monitor output setup	Range	Unit	Default	Related control mode			
		0 to 2	—	0	P	S	T	F

Select output format of the analog monitor.

Setup value	Output format	
[0]	Signed data output	−10 V to 10 V
1	Absolute value data output	0 V to 10 V
2	Data output with offset	0 V to 10 V (5 V at center)

Pr4.22	Analog input 1 (AI1) offset setup	Range	Unit	Default	Related control mode			
		−27888 to 27888	0.359 mV	0	P	S	T	F

Set up the offset correction value applied to the voltage fed to the analog input 1.

Pr4.23	Analog input 1 (AI1) filter	Range	Unit	Default	Related control mode			
		0 to 6400	0.01 ms	0	P	S	T	F

Set up the time constant of 1st delay filter that determines the lag time behind the voltage applied to the analog input 1.

Pr4.24	Analog input 1 (AI1) overvoltage setup	Range	Unit	Default	Related control mode			
		0 to 100	0.1 V	0	P	S	T	F

Set up the excessive level of the input voltage of analog input 1 by using the voltage associated with offset.

Pr4.25	Analog input 2 (AI2) offset setup	Range	Unit	Default	Related control mode			
		−1707 to 1707	5.86 mV	0	P	S	T	F

Set up the offset correction value applied to the voltage fed to the analog input 2.

Pr4.26	Analog input 2 (AI2) filter	Range	Unit	Default	Related control mode			
		0 to 6400	0.01 ms	0	P	S	T	F

Set up the time constant of 1st delay filter that determines the lag time behind the voltage applied to the analog input 2.

Pr4.27	Analog input 2 (AI2) overvoltage setup	Range	Unit	Default	Related control mode			
		0 to 100	0.1 V	0	P	S	T	F

Set up the excessive level of the input voltage of analog input 2 by using the voltage associated with offset.

Pr4.28	Analog input 3 (AI3) offset setup	Range	Unit	Default	Related control mode			
		−1707 to 1707	5.86 mV	0	P	S	T	F

Set up the offset correction value applied to the voltage fed to the analog input 3.

Default: [ ]

Pr4.29	Analog input 3 (AI3) filter	Range	Unit	Default	Related control mode			
		0 to 6400	0.01 ms	0	P	S	T	F

Set up the time constant of 1st delay filter that determines the lag time behind the voltage applied to the analog input 3.

Pr4.30	Analog input 3 (AI3) overvoltage setup	Range	Unit	Default	Related control mode			
		0 to 100	0.1 V	0	P	S	T	F

Set up the excessive level of the input voltage of analog input 3 by using the voltage associated with offset.

Pr4.31	Positioning complete (In-position) range	Range	Unit	Default	Related control mode			
		0 to 2097152	Command unit	10	P			F

Set up the timing of positional deviation at which the positioning complete signal (INP1) is output.

Caution The command unit is used as the default unit but can be replaced by the encoder unit by using Pr5.20. Positioning unit selection. Note that when the encoder unit is used, unit of Pr0.14 Positional deviation excess setup is also changed.

Note For description of “command unit” and “encoder unit” , refer to P.4-58 “Pr5.20” .

Pr4.32	Positioning complete (In-position) output setup	Range	Unit	Default	Related control mode			
		0 to 10	—	0	P			F

Select the condition to output the positioning complete signal (INP1).

Setup value	Action of positioning complete signal
[0]	The signal will turn on when the positional deviation is smaller than Pr4.31 (Positioning complete range)
1, 6	The signal will turn on when there is no position command and the positional deviation is smaller than Pr4.31 (Positioning complete range).
2, 7	The signal will turn on when there is no position command, the zero-speed detection signal is ON and the positional deviation is smaller than Pr4.31 (Positioning complete range).
3, 8	The signal will turn on when there is no position command and the positional deviation is smaller than Pr4.31 (Positioning complete range). Then holds "ON" status until the next position command is entered.Subsequently, ON state is maintained until Pr4.33 INP hold time has elapsed. After the hold time, INP output will be turned ON/OFF according to the coming positional command or condition of the positional deviation.
4, 9	When the positioning judgment delay time set by Pr4.33 INP hold time passes after transition from “with position command” to “without position command” , positioning complete judgment sequence starts. If there is no position command and the positional deviation is smaller than Pr4.31 Positioning complete (in position) range, the signal will turn on.
5, 10	When the positioning judgment delay time set by Pr4.33 INP hold time passes after transition from “with position command” to “without position command” , and within positioning complete range, positioning complete judgment sequence starts. If there is no position command and the positional deviation is smaller than Pr4.31 Positioning complete range, the signal will turn on.

Caution Presence/absence of position command can be judged by referring to the command after position command filter when the setup value is 1-5, or the command before position command filter when the setup value is 6-10.

Default: [ ]

Pr4.33	INP hold time	Range	Unit	Default	Related control mode			
		0 to 30000	1 ms	0	P			F

Set up the hold time when Pr4.32 Positioning complete output setup = 3.

Setup value	State of positioning complete signal
[0]	The hold time is maintained definitely, keeping ON state until the next positional command is received.
1 to 30000	ON state is maintained for setup time (ms) but switched to OFF state as the positional command is received during hold time.

Pr4.34	Zero-speed	Range	Unit	Default	Related control mode			
		10 to 20000	r/min	50	P	S	T	F

You can set up the timing to feed out the zero-speed detection output signal (ZSP or TCL) in rotational speed [r/min].
The zero-speed detection signal (ZSP) will be fed out when the motor speed falls below the setup of this parameter, Pr4.34.

- The setup of Pr4.34 is valid for both Positive and Negative direction regardless of the motor rotating direction.
- There is hysteresis of 10 [r/min].

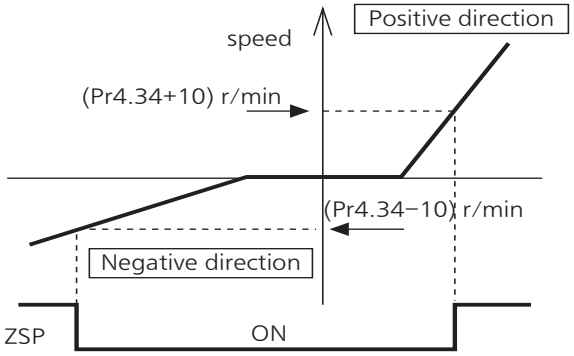

Pr4.35	Speed coincidence range	Range	Unit	Default	Related control mode			
		10 to 20000	r/min	50		S	T	

Set the speed coincidence (V-COIN) output detection timing.
Output the speed coincidence (V-COIN) when the difference between the speed command and the motor speed is equal to or smaller than the speed specified by this parameter.

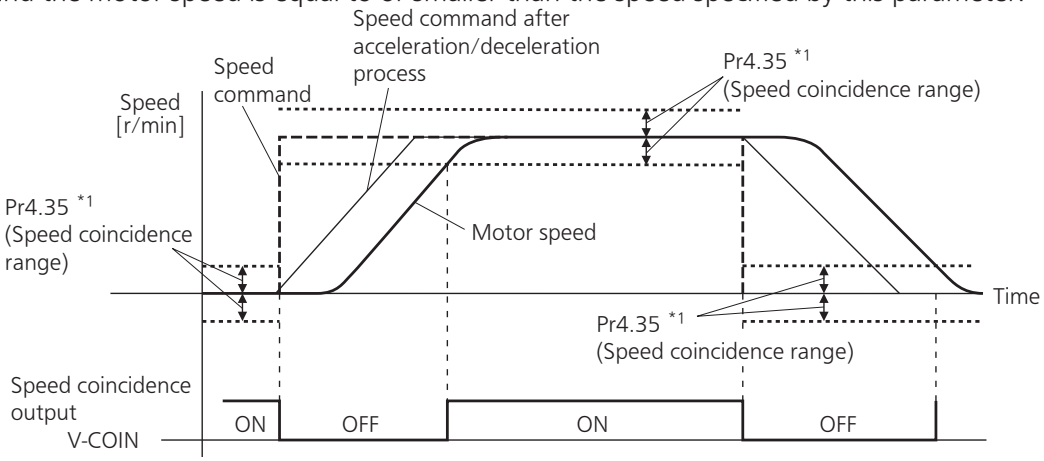

*1 Because the speed coincidence detection is associated with 10 r/min hysteresis, actual detection range is as shown below.
Speed coincidence output OFF → ON timing (Pr4.35 − 10) r/min
Speed coincidence output ON → OFF timing (Pr4.35 + 10) r/min

Pr4.36	At-speed (Speed arrival)	Range	Unit	Default	Related control mode
		10 to 20000	r/min	1000	S T

Set the detection timing of the speed arrival output (AT-SPEED).
When the motor speed exceeds this setup value, the speed arrival output (AT-SPEED) is output. Detection is associated with 10 r/min hysteresis.

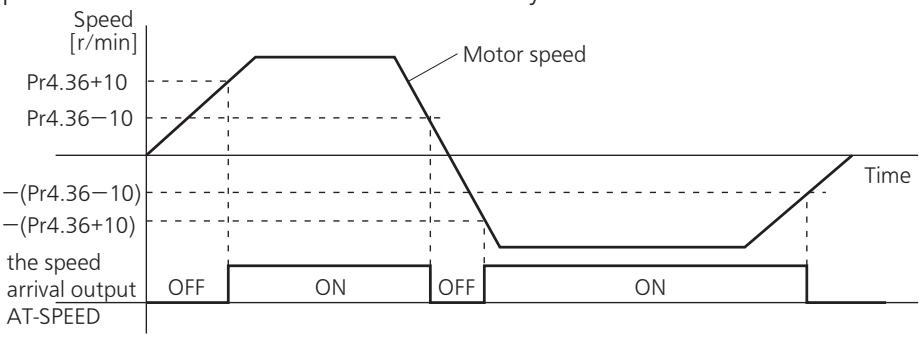

Pr4.37	Mechanical brake action at stalling setup	Range	Unit	Default	Related control mode
		0 to 10000	1 ms	0	P S T F

You can set up the time from when the brake release signal (BRK-OFF) turns off to when the motor is de-energized (Servo-free), when the motor turns to Servo-OFF while the motor is at stall.

- Set up to prevent a micro-travel/ drop of the motor (work) due to the action delay time (tb) of the brake
- After setting up Pr4.37 ≥ tb, then compose the sequence so as the driver turns to Servo-OFF after the brake is actually activated.

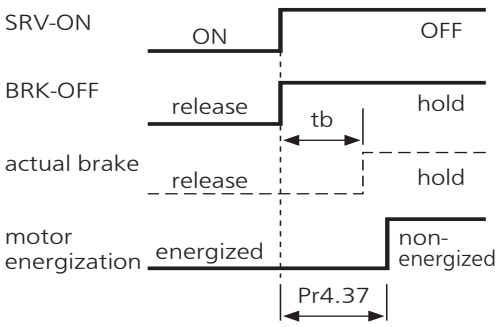

Pr4.38	Mechanical brake action at running setup	Range	Unit	Default	Related control mode
		0 to 32000	1 ms	0	P S T F

You can set up time from when detecting the off of Servo-ON input signal (SRV-ON) is to when external brake release signal (BRK-OFF) turns off, while the motor turns to servo off during the motor in motion.

- Set up to prevent the brake deterioration due to the motor running.
- At Servo-OFF during the motor is running, tb of the right fig. will be a shorter one of either Pr4.38 setup time, or time lapse till the motor speed falls below Pr4.39 setup speed.

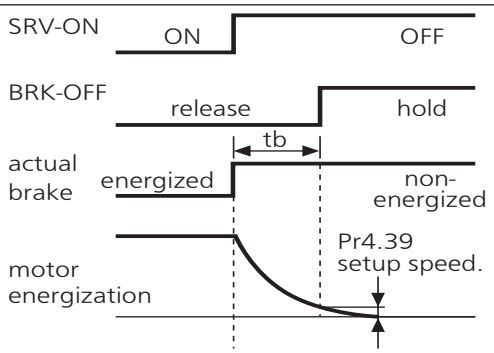

Note

- A parameter is designated as follows: Class Pr0.00 Parameter No.
- For parameters which No. have a suffix of " * ", changed contents will be validated when you turn on the control power.

Related page
- P.3-34 "Inputs and outputs on connector X4"

Default: [ ]

Pr4.39	Brake release speed setup	Range	Unit	Default	Related control mode			
		30 to 3000	r/min	30	P	S	T	F

Set up the speed timing of brake output checking during operation.

Pr4.40	Selection of alarm output 1	Range	Unit	Default	Related control mode			
		0 to 40	—	0	P	S	T	F

Pr4.41	Selection of alarm output 2	Range	Unit	Default	Related control mode			
		0 to 40	—	0	P	S	T	F

Select the type of alarm issued as the alarm output 1 or 2.

Setup value	Alarm	Content
[0]	—	ORed output of all alarms.
1	Overload protection	Load factor is 85 % or more the protection level.
2	Over-regeneration alarm	Regenerative load factor is 85 % or more the protection level.
3	Battery alarm	Battery voltage is 3.2 V or lower.
4	Fan alarm	Fan has stopped for 1 sec.
5	Encoder communication alarm	The number of successive encoder communication errors exceeds the specified value.
6	Encoder overheat alarm	The encoder detects overheat alarm.
7	Oscillation detection alarm	Oscillation or vibration is detected.
8	Lifetime detection alarm	Life expectancy of capacitor or fan becomes short.
9	External scale error alarm	The external scale detects the alarm.
10	External scale communication alarm	The number of successive external scale communication errors exceeds the specified value.
11	Velocity command ON/OFF output	When Pr7.14(main power off alert detection time) is 10 to 1999, L1-L3 Instant stop for the time set at Pr7.14 above.

Related page For detailed description of alarm types, refer to P.3-51.

Pr4.42	2nd Positioning complete (In-position) range	Range	Unit	Default	Related control mode			
		0 to 2097152	Command unit	10	P			F

The INP2 turns ON whenever the positional deviation is lower than the value set up in this parameter, without being affected by Pr4.32 Positioning complete output setup. (Presence/absence of positional command is not related to this judgment.)

Caution The command unit is used as the default unit but can be replaced by the encoder unit by using Pr5.20. Positioning unit selection. Note that when the encoder unit is used, unit of Pr0.14 Positional deviation excess setup is also changed.

Note For description of "command unit" and "encoder unit" , refer to P.4-58 "Pr5.20" .

Note
- A parameter is designated as follows: Class Pr0.00 Parameter No.
- For parameters which No. have a suffix of " * ", changed contents will be validated when you turn on the control power.

Related page
- P.3-34 "Inputs and outputs on connector X4"

Default: [ ]

Pr4.44*	Position compare output pulse width setting	Range	Unit	Default	Related control mode			
		0 to 32767	0.1 ms	0	P			F

Sets the signal width of position compare output.
No signal will be output when 0.

Pr4.45*	Position compare output polarity select	Range	Unit	Default	Related control mode			
		0 to 63	—	0	P			F

Sets polarity of position compare output by bit for each output terminal.

•Set bits

bit	Designation
bit0	SO1 or OCMP1
bit1	SO2 or OCMP2
bit2	SO3 or OCMP3
bit3	SO4 or OCMP4
bit4	SO5
bit5	SO6

•Set value

Setup value	Designation
0	Output photocoupler for SO 1 to 6 will turn ON during pulse output and OCMP 1 to 4 will be L level respectively.
1	Output photocoupler for SO1 to 6 will turn OFF during pulse output and OCMP 1 to 4 will be H level respectively,Use 0 normally.

Pr4.47*	Pulse output select	Range	Unit	Default	Related control mode			
		0 to 7	—	0	P	S	T	F

Selects signal to be output from pulse regeneration output / position compare output terminal.

Setup value	Designation
[0]	OA/OB/OZ/CZ
1	OCMP1/OCMP2/OZ/CZ
2	OA/OB/OCMP3/OCMP3
3	OCMP1/OCMP2/OCMP3/OCMP3
4	OA/OB/OZ/OCMP4
5	OCMP1/OCMP2/OZ/OCMP4
6	OA/OB/OCMP3/OCMP4
7	OCMP1/OCMP2/OCMP3/OCMP4

*The signal of OA, OB, OZ, CZ is pulse regeneration output,the signal of OCMP1, OCMP2, OCMP3, OCMP4 is position compare output terminal.

Pr4.48	Position compare value 1	Range	Unit	Default	Related control mode			
		-2147483648 to 2147483647	Command unit	0	P			F

Sets comparison value for position compare 1.

Default: [ ]

Pr4.49	Position compare value 2	Range	Unit	Default	Related control mode			
		-2147483648 to 2147483647	Command unit	0	P			F
	Sets comparison value for position compare 2.							

Pr4.50	Position compare value 3	Range	Unit	Default	Related control mode			
		-2147483648 to 2147483647	Command unit	0	P			F
	Sets comparison value for position compare 3.							

Pr4.51	Position compare value 4	Range	Unit	Default	Related control mode			
		-2147483648 to 2147483647	Command unit	0	P			F
	Sets comparison value for position compare 4.							

Pr4.52	Position compare value 5	Range	Unit	Default	Related control mode			
		-2147483648 to 2147483647	Command unit	0	P			F
	Sets comparison value for position compare 5.							

Pr4.53	Position compare value 6	Range	Unit	Default	Related control mode			
		-2147483648 to 2147483647	Command unit	0	P			F
	Sets comparison value for position compare 6.							

Pr4.54	Position compare value 7	Range	Unit	Default	Related control mode			
		-2147483648 to 2147483647	Command unit	0	P			F
	Sets comparison value for position compare 7.							

Pr4.55	Position compare value 8	Range	Unit	Default	Related control mode			
		-2147483648 to 2147483647	Command unit	0	P			F
	Sets comparison value for position compare 8.							

Pr4.56*	Position compare output delay compensation amount	Range	Unit	Default	Related control mode			
		-32768 to 32767	0.1us	0	P			F
	Compensates position compare output delay caused by the circuit.							

Pr4.57*	Position compare output assignment setting	Range	Unit	Default	Related control mode			
		-2147483648 to 2147483647	Command unit	0	P			F

Sets output terminal corresponding to position compare 1 to 6 by bit.
Multiple position compare can be set to a single output terminal.

Set bits

bit	Designation
bit0 to 3	Position com 1
bit4 to 7	Position com 2
bit8 to 11	Position com 3
bit12 to 15	Position com 4
bit16 to 19	Position com 5
bit20 to 23	Position com 6
bit24 to 27	Position com 7
bit28 to 31	Position com 8

Set value

Setup value	Designation
0000	Invalid output
0001	Assigned to SO1 or OCMP1
0010	Assigned to SO2 or OCMP2
0011	Assigned to SO3 or OCMP3
0100	Assigned to SO4 or OCMP4
0101	Assigned to SO5
0110	Assigned to SO6
Others	For manufacturer use (do not set)

1. Details of parameter

[Class 5] Enhancing setting

Default: [ ]

Pr5.00	2nd numerator of electronic gear	Range	Unit	Default	Related control mode			
		0 to 2^{30}	—	0	P			F

Pr5.01	3rd numerator of electronic gear	Range	Unit	Default	Related control mode			
		0 to 2^{30}	—	0	P			F

Pr5.02	4th numerator of electronic gear	Range	Unit	Default	Related control mode			
		0 to 2^{30}	—	0	P			F

Set the 2nd to 4th numerator of division/multiplication operation made according to the command pulse input.
This setup is enabled when Pr0.08 command pulse counts per one motor revolution = 0 or full closed controlling.
When the setting value is 0 for positioning controlling, encoder resolution is set as a numerator.
When the setting value is 0 for full closed controlling, both numerator and denominator are set to 1.

Pr5.03 *	Denominator of pulse output division	Range	Unit	Default	Related control mode			
		0 to 8388608	—	0	P	S	T	F

For details, refer to P.4-14.

Pr5.04 *	Over-travel inhibit input setup	Range	Unit	Default	Related control mode			
		0 to 2	—	1	P	S	T	F

Set up the operation of the run-inhibition (POT, NOT) inputs.

Setup value	Operation
0	POT → Inhibit positive direction travel NOT → Inhibit negative direction travel
[1]	Disable POT, NOT
2	POT or NOT input activates Err38.0 Run-inhibition input protection.

Default: [ ]

Pr5.05 *	Sequence at over-travel inhibit	Range	Unit	Default	Related control mode			
		0 to 2	—	0	P	S	T	F

When Pr5.04 Over-travel inhibition = 0, specify the status during deceleration and stop after application of the over-travel inhibition (POT, NOT).

<Details of Pr5.05 (Sequence at over-travel inhibit)>

Pr5.04	Pr5.05	During deceleration*6	After stalling	Deviation counter content
0	[0]	Dynamic brake action	Torque command=0 towards inhibited direction	Hold*2
	1	Torque command=0 towards inhibited direction	Torque command=0 towards inhibited direction	Hold*2
	2	Emergency stop*5	Command=0 towards inhibited direction*1	Clears before/ after deceleration*3

*1 In the case of position control and full-closed control, position command = 0 state is indicated, in the case of velocity control, speed command = 0 state, and in the case of torque control, speed limit value =0 state.

*2 Continuing giving commands in the drive prohibition direction with drive prohibition input set to ON causes position deviation to accumulate and Err24.0 “Excess position deviation error.” When the drive prohibition input is turned ON, stop giving commands in the drive prohibition direction.

*3 Position deviation and external scale deviation are cleared twice, deceleration start instance and deceleration completion instance.
In the event that the position is controlled in order to clear the position deviation and external scale deviation, home position return action must be conducted to return.

*4 Because in the event that the setting is 2 in Pr5.04 “Drive prohibition input setting,” Err38.0 “Drive prohibition input protection” occurs when either one of POT or NOT turns ON, the motor operates not in accordance with this setting but in accordance with Pr5.10 “Sequence at alarm.” When other error occurs, too, priority is given to Pr5.10 “Sequence at alarm” in the same manner.

*5 Immediate stop means to immediately stop with control applied while servo is turned ON.
The torque command value in such event is restricted by Pr5.11 “Immediate stop torque setting.”
Because an immediate stop abruptly decelerates the motor, in position control, the position deviation may instantaneously increase, and Err24.0 “Position deviation excess protection” or Err34.0 “Allowable motor operating range setting error protection” may occur.
In such event, set Pr0.14 “Position deviation excess setting” and Pr5.14 “Allowable motor operating range” to appropriate values.
To stop with the torque set by “Immediate stop torque setting,” continue to provide normal command for at least 4 ms from signal input.

*6 During deceleration means an interval in which the motor achieves the speed lower than 30 r/min from the condition in which the motor operates. When the motor speed becomes 30 r/min or lower once and then changes after stopping, the motor follows the state after stopping irrespective of the motor speed.

Default: [ ]

Pr5.06	Sequence at Servo-Off	Range	Unit	Default	Related control mode			
		0 to 9	—	0	P	S	T	F

Specify the status during deceleration and after stop, after servo-off.

Setup value	During deceleration *3	After stalling	Positional deviation/ external scale deviation
[0]	Dynamic Brake (DB) action	Dynamic Brake (DB) action	Clear *4
1	Free-run (DB OFF)	Dynamic Brake (DB) action	Clear *4
2	Dynamic Brake (DB) action	Free-run (DB OFF)	Clear *4
3	Free-run (DB OFF)	Free-run (DB OFF)	Clear *4
4	Dynamic Brake (DB) action	Dynamic Brake (DB) action	Hold *2
5	Free-run (DB OFF)	Dynamic Brake (DB) action	Hold *2
6	Dynamic Brake (DB) action	Free-run (DB OFF)	Hold *2
7	Free-run (DB OFF)	Free-run (DB OFF)	Hold *2
8	Emergency stop *1	Dynamic Brake (DB) action	Clear *4
9	Emergency stop *1	Free-run (DB OFF)	Clear *4

*1 Emergency stop refers to a controlled immediate stop with servo-on.
The torque command value is limited during this process by Pr5.11 Emergency stop torque setup.

*2 If the positional command is kept applied or the motor is kept running with servo-off condition, positional deviation is accumulated, causing Err24.0 Excess positional deviation protection to be issued. If the servo is turned ON while the position or external scale is significantly deviating, the motor may rapidly operate to reduce the deviation to 0. Remember these requirements if you want to maintain the positional deviation/external scale deviation.

*3 Deceleration period is the time required for the running motor to speed down to 30 r/min. Once the motor speed drops below 30 r/min, it is treated as in stop state regardless of its speed.

*4 Positional deviation/external scale deviation is always cleared to 0.

Caution If an error occurs during servo-off, follow Pr5.10 Sequence at alarm. If the main power is turned off during servo-off, follow Pr5.07 Sequence during main power interruption.

Related page Refer to P.2-76, "Timing Chart"-Servo-ON/OFF action while the motor is at stall" of Preparation as well.

Pr5.07	Sequence at main power OFF	Range	Unit	Default	Related control mode			
		0 to 9	—	0	P	S	T	F

Specify the status during deceleration after main power interrupt or after stoppage.
The relationship between the setup value of Pr5.06 and the operation and process at deviation counters is the same as that for Pr5.07 (sequence at main power OFF).

Caution If an error occurs with the main power supply turned off, Pr5.10 Sequence at alarm is applied to the operation.
When the main power supply is turned off with servo-on state, Err13.1 Main power undervoltage error occurs if Pr5.08 LV trip selection with main power off = 1, and the operation follows Pr5.10 Sequence at alarm.

Pr5.08	LV trip selection at main power OFF	Range	Unit	Default	Related control mode
		0 to 3	—	1	P S T F

To select whether to trip LV or Servo Off, in case of main power supply alarm.
In addition, also sets conditions for detection of main power supply off warning, in case the main power supply cut-off condition persists more than the time set in Pr 7.14.

	Setup value	Action of main power low voltage protection
bit 0	0	Servo Off in accordance with setting of Pr 5.07 and resumes Servo On when power supply reclosed
	1	Detects Err 13.1 Main power supply low voltage protection.
bit 1	0	Main power supply Off warning detects only on Servo On conditions.
	1	Main power supply off warning always detected.

This parameter is invalid when Pr5.09 (Detection time of main power OFF)=2000. Err13.1 (Main power under-voltage protection) is triggered when setup of Pr5.09 is long and P-N voltage of the main converter falls below the specified value before detecting the main power shutoff, regardless of the Pr5.08 setup.

Pr5.09 *	Detection time of main power off	Range	Unit	Default	Related control mode
		20 to 2000	1 ms	70	P S T F

You can set up the time to detect the shutoff while the main power is kept shut off continuously.
The main power off detection is invalid when you set up this to 2000.

Pr5.10	Sequence at alarm	Range	Unit	Default	Related control mode
		0 to 7	—	0	P S T F

Specify the status during deceleration and after stop, after occurrence of alarm.

Setup value	During deceleration *3	After stalling	Positional deviation/ external scale deviation
[0]	Dynamic Brake (DB) action	Dynamic Brake (DB) action	Hold *1
1	Free-run (DB OFF)	Dynamic Brake (DB) action	Hold *1
2	Dynamic Brake (DB) action	Free-run (DB OFF)	Hold *1
3	Free-run (DB OFF)	Free-run (DB OFF)	Hold *1
4	Action A: Emergency stop Action B: DB action *2	Dynamic Brake (DB) action	Hold *1
5	Action A: Emergency stop Action B: DB OFF *2	Dynamic Brake (DB) action	Hold *1
6	Action A: Emergency stop Action B: DB action *2	Free-run (DB OFF)	Hold *1
7	Action A: Emergency stop Action B: DB OFF *2	Free-run (DB OFF)	Hold *1

*1 Positional deviation/external scale deviation is maintained during alarm condition and will be cleared when the alarm is cancelled.
*2 Action of A/B: When an alarm requiring emergency stop occurs, the action A is selected when the setup value in the table is set within the range 4 to 7, causing emergency stop of operation. When an alarm not requiring emergency stop occurs, it triggers dynamic braking (DB) specified by action B, or free-running.
*3 Deceleration period is the time required for the running motor to speed down to 30 r/min.

Default: [ ]

Pr5.11	Torque setup for emergency stop	Range	Unit	Default	Related control mode			
		0 to 500	%	0	P	S	T	F

Note

Set up the torque limit at emergency stop.
When setup value is 0, the torque limit for normal operation is applied.

Pr5.12	Over-load level setup	Range	Unit	Default	Related control mode			
		0 to 500	%	0	P	S	T	F

- You can set up the over-load level of effective torque. The overload level becomes 115[%] by setting up this to 0.
- Use this with 0 setup in normal operation. Set up other value only when you need to lower the over-load level.
- The setup value of this parameter is limited by 115[%] of the motor rating.
  The over-load protection time characteristics are described on P.6-17.

Pr5.13	Over-speed level setup	Range	Unit	Default	Related control mode			
		0 to 20000	r/min	0	P	S	T	F

- If the motor speed exceeds this setup value, Err26.0 Over-speed protection occurs.
- The over-speed level becomes 1.2 times of the motor max. speed by setting up this to 0.

Pr5.14	Motor working range setup	Range	Unit	Default	Related control mode			
		0 to 1000	0.1 revolution	10	P			F

Note

- You can set up the movable range of the motor against the position command input range.
- When the motor movement exceeds the setup value, software limit protection of Err34.0 will be triggered.

Pr5.15 *	I/F reading filter	Range	Unit	Default	Related control mode			
		0 to 3	—	0	P	S	T	F

Select reading period of the control input signal.

Setup value	Reading period of the signal.
[0]	0.25 ms
1	0.5 ms
2	1 ms
3	2 ms

Exclude deviation counter clear input (CL) and command pulse inhibit input (INH).

Pr5.16 *	Alarm clear input setup	Range	Unit	Default	Related control mode			
		0 to 1	—	0	P	S	T	F

Select alarm clear input (A-CLR) recognition time.

Setup value	Recognition time
[0]	120 ms
1	To Pr5.15 IF reading filter

Default: [ ]

Pr5.17	Counter clear input mode	Range	Unit	Default	Related control mode
		0 to 4	—	3	P F

You can set up the clearing conditions of the counter clear input signal.

Setup value	Clear condition
0	Invalid
1	Clear at a level (no reading filter)
2	Clear at a level (with reading filter)
[3]	Clear at an edge (no reading filter)
4	Clear at an edge (with reading filter)

Note For signal width/timing requiring the deviation counter input, refer to P.3-42.

Pr5.18	Invalidation of command pulse inhibit input	Range	Unit	Default	Related control mode
		0 to 2	—	1	P F

Set the command pulse input inhibition to valid or invalid.
0:valid
(When INH is input, the command pulse input is inhibited, and the residual pulse of positional command filter and electronic gear is removed)
1:invalid
2:valid
(When INH is input, the command pulse input is inhibited, and the residual pulse of positional command filter and electronic gear is retained)

Pr5.19 *	Command pulse inhibit input reading setup	Range	Unit	Default	Related control mode
		0 to 5	—	0	P F

Related page Select command pulse inhibit input enable/disable signal reading period. When the status of several signals read during the predetermined reading period are same, update the signal status.

Setup value	Signal reading period
[0]	0.250 ms to 3 times continuous
1	0.500 ms to 3 times continuous
2	1.0 ms to 3 times continuous
3	2.0 ms 3 times continuous
4	0.250 ms to read 1 time
5	0.250 ms to 2 times continuous

Longer reading period protects against operation error due to noise but decreases response to input signal.

Note
- A parameter is designated as follows: Class Pr0.00 Parameter No.
- For parameters which No. have a suffix of " * ", changed contents will be validated when you turn on the control power.

Related page
- P.3-34 "Inputs and outputs on connector X4"

Default: [ ]

Pr5.20 *	Position setup unit select	Range	Unit	Default	Related control mode			
		0 to 1	—	0	P			F

Specify the unit to determine the range of positioning complete and excessive positional deviation.

Setup value	Unit
[0]	Command unit
1	Encoder unit

Note

The command unit defines 1 command pulse from the higher level device as setting value 1, while the encoder unit defines 1 encoder pulse as setting value 1.
When the electronic gear ratio set by using the command division and multiplication function (electronic gear) is R, the following relationship is obtained.

Command unit × R = encoder unit

For example, if 23-bit encoder is used with the default setting,

$R = \frac{2^{23}}{10000}$, then, command unit × $\frac{2^{23}}{10000}$ = encoder unit.

Pr5.21	Selection of torque limit	Range	Unit	Default	Related control mode			
		0 to 6	—	1	P	S		F

You can set up the torque limiting method.

Setup value	Positive direction	Negative direction
0	P-ATL (0 V to 10 V)	N-ATL (− 10 V to 0 V)
[1]	1st torque limit (Pr0.13)	
2	1st torque limit (Pr0.13)	2nd torque limit (Pr5.22)
3	TL-SEL OFF → 1st torque limit (Pr0.13) TL-SEL ON → 2nd torque limit (Pr5.22)	
4	P-ATL (0 V to 10 V)	N-ATL (0 V to 10 V)
5	P-ATL (0 V to 10 V)	
6	TL-SEL OFF	
	1st torque limit (Pr0.13)	2nd torque limit (Pr5.22)
	TL-SEL ON	
	External input positive direction torque limit (Pr5.25)	External input negative direction torque limit (Pr5.26)

Pr5.22	2nd torque limit	Range	Unit	Default	Related control mode			
		0 to 500	%	500	P	S		F

You can set up the 2nd limit value of the motor output torque.
The value of parameter is limited to the maximum torque of the applicable motor.

Note

For details of torque limit value, refer to P.2-106.

Pr5.23	Torque limit switching setup 1	Range	Unit	Default	Related control mode			
		0 to 4000	ms/100 %	0	P	S		F

Specify the rate of change (slope) from 1st to 2nd during torque limit switching.

Default: [ ]

Pr5.24	Torque limit switching setup 2	Range	Unit	Default	Related control mode			
		0 to 4000	ms/100 %	0	P	S		F

Specify the rate of change (slope) from 2nd to 1st during torque limit switching.

Pr5.25	External input positive direction torque limit	Range	Unit	Default	Related control mode			
		0 to 500	%	500	P	S		F

Set up positive direction torque limit upon receiving TL-SEL with Pr5.21 Selection of torque limit set at 6.
The value of parameter is limited to the maximum torque of the applicable motor.

Note For details of torque limit value, refer to P.2-104.

Pr5.26	External input negative direction torque limit	Range	Unit	Default	Related control mode			
		0 to 500	%	500	P	S		F

Set up negative direction torque limit upon receiving TL-SEL with Pr5.21 Selection of torque limit set at 6.
The value of parameter is limited to the maximum torque of the applicable motor.

Note For details of torque limit value, refer to P.2-104.

Pr5.27	Input gain of analog torque limit	Range	Unit	Default	Related control mode			
		10 to 100	0.1 V/100 %	30	P	S		F

From the voltage [V] applied to the analog torque limit input (P-ATL, N-ATL), set conversion gain to torque limit [%].

Note
- A parameter is designated as follows: Class Pr0.00 Parameter No.
- For parameters which No. have a suffix of " * ", changed contents will be validated when you turn on the control power.

Related page
- P.3-34 "Inputs and outputs on connector X4"

Default: [ ]

Pr5.28 *	LED initial status	Range	Unit	Default	Related control mode
		0 to 42	—	1	P S T F

You can select the type of data to be displayed on the front panel LED (7 segment) at the initial status after power-on.

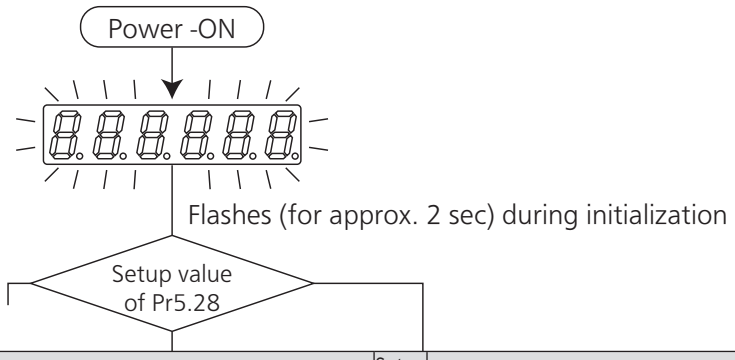

Setup value	Content	Setup value	Content	Setup value	Content
0	Positional command deviation	14	Regenerative load factor	28	Software version
[1]	Motor speed	15	Over-load factor	29	Driver serial number
2	Positional command speed	16	Inertia ratio	30	Motor serial number
3	Velocity control command	17	Factor of no-motor running	31	Accumulated operation time
4	Torque command	18	No. of changes in I/O signals	32	Automatic motor recognizing function
5	Feedback pulse sum	20	Absolute encoder data	33	Temperature information
6	Command pulse sum	21	Absolute external scale position	35	Safety condition monitor
8	External scale feedback pulse sum	22	No. of encoder communication errors monitor	38	Motor power
9	Control mode	23	Communication axis address	39	For manufacturer use
10	I/O signal status	24	Encoder positional deviation [Encoder unit]	40	For manufacturer use
11	Analog input value	25	External scale deviation [External scale unit]	41	For manufacturer use
12	Error factor and reference of history	26	Hybrid deviation [Command unit]	42	For manufacturer use
13	Alarm Display	27	Voltage across PN [V]		

Related page For details of display, refer to P.2-110 "How to Use the Front Panel" of Preparation.

Pr5.29 *	Baud rate setup of RS232 communication	Range	Unit	Default	Related control mode
		0 to 7	—	2	P S T F

You can set up the communication speed of RS232.

Note For baud rate setup value, refer to RS485 setup.

Default: [ ]

Pr5.30 *	Baud rate setup of RS485 communication	Range	Unit	Default	Related control mode
		0 to 7	—	2	P S T F

You can set up the communication speed of RS485.

Setup value	Baud rate	Setup value	Baud rate
0	2400 bps	4	38400 bps
1	4800 bps	5	57600 bps
[2]	9600 bps	6	115200 bps
3	19200 bps	7	230400 bps

Baud rate error is ± 0.5 % for 2400 to 38400 bps, and ± 2 % for 57600 to 115200 bps.
*When not modbus communication (Pr5.37=0),if the set value is 7,the internal is 9600bps.

Pr5.31 *	Axis address	Range	Unit	Default	Related control mode
		0 to 127	—	1	P S T F

During communication with the host (e.g. PC) to control multiple shafts, the shaft being accessed by the host should be identified.

Note When using RS232/RS485, the maximum valid value is 31.
Use within the range of 1 to 127 for Modbus communication. 0 will disable Modbus communication.

Pr5.32 *	Command pulse input maximum setup	Range	Unit	Default	Related control mode
		250 to 4000	k pulse/s	4000	P F

Set the maximum number of pulses to be used as command pulse input. If the number of input pulses exceeds the setup value × 1.2, Err27.0 Command pulse input frequency error protection occurs.

Caution The number of input pulses received by the driver is always checked. If the frequency of the received pulse is higher than the upper limit of the setting, input pulses are not accurately detected.
By selecting a value lower than 1000, a digital filter of the specification shown below is enabled against the command pulse input.

Pr5.32 setting range	Digital filter	
	Pr0.05=0,2	Pr0.05=1
250	400 ns 2-time reading	400 ns 2-time reading
251 to 499	200 ns 2-time reading	200 ns 2-time reading
500 to 999		100 ns 2-time reading
1000 to 2999		25 ns 2-time reading
3000 to 8000		1-time reading (thru)

Pr5.33 *	Pulse regenerative output limit setup	Range	Unit	Default	Related control mode
		0 to 1	—	0	P S T F

Enable/disable detection of Err28.0 Pulse regenerative limit protection.

Setup value	Content
[0]	Invalid
1	Valid

Note
- A parameter is designated as follows: Class Pr0.00 Parameter No.
- For parameters which No. have a suffix of " * ", changed contents will be validated when you turn on the control power.

Default: [ ]

Pr5.34	For manufacturer's use	Range	Unit	Default	Related control mode			
		—	—	4				

Fixed to 4.

Pr5.35 *	Front panel lock setup	Range	Unit	Default	Related control mode			
		0 to 1	—	0	P	S	T	F

Lock the operation on the front panel.

Setup value	Content
[0]	No limit on the front panel operation
1	Lock the operation on the front panel

Pr5.36	For manufacturer's use	Range	Unit	Default	Related control mode			
		—	—	0				

Fixed to 0.

Pr5.37 *	Modbus connection setting	Range	Unit	Default	Related control mode			
		0 to 2	—	0	P	S	T	F

To set RS232/RS485 communications protocol.

Setup value	Content
[0]	MINAS standard protocol
1	Modbus-RTU (RS232 communications, only for 1:1)
2	Modbus-RTU (RS485 communications, 1:N capable)

Pr5.38 *	Modbus communication setting	Range	Unit	Default	Related control mode			
		0 to 5	—	0	P	S	T	F

To set parity (even, odd, none) and stop bit length (1 bit, 2 bit) of Modbus communications.

Setup value	Content	Setup value	Content
[0]	Even/1 bit	3	Odd/2 bit
1	Even/2 bit	4	None/1 bit
2	Odd/1 bit	5	None/2 bit

Pr5.39	Modbus response waiting time	Range	Unit	Default	Related control mode			
		0 to 10000	ms	0	P	S	T	F

To set waiting time to be added from the receipt of Modbus communication request till the transmission of response data.

Note) Delay time will be generated for the creation of response data, even if the value is set to 0 (zero).

Default: [ ]

Pr5.40	RS232/RS485/Modbus communication timeout time	Range	Unit	Default	Related control mode			
		0 to 10000	ms	0	P	S	T	F

To set the time required to detect Err. 80.0 “RS232/RS485/Modbus communication timeout protection” in case broadcast designated RS232/RS485/Modbus communications from own specified axis has not been received exceeding the set time, while maintaining the state where RS232/RS485/Modbus exercise right is secured.

Err. 80.0 is not detected when set value is set to 0 (zero).

Pr5.41	For manufacturer’ s use	Range	Unit	Default	Related control mode			
		—	—	0				

Pleses fixed to 0.

Pr5.42	Modbus broadcast setting	Range	Unit	Default	Related control mode			
		-32768 to 3276	ms	0	P	S	T	F

To set response action and request processing when a request for broadcast mode is received in Modbus communication.

bit	Content	Setup value	
bit0	esponse action	Invalid (none)	1:Valid (yes) *1
bit1	request processing	0:Valid (process)	1:Invalid (no processing)
bit2	Strobe input operation automatic OFF	0:Invalid	1:Valid *2
bit3	Request operation specification switch *1	0:Use Pr5.40	1:Use Pr5.39
bit4-15	Not used	Fixed to 0.	

*bit 0 is set to be the least significant bit.
*1 When bit 3 = 0, response returned after Pr 5.31 x Pr 5.40 [ms]. When bit 3 =1, response returned after Pr 5.31 × Pr 5.39[ms]. No response returned when bit 1 = 1
*2 Strobe input operation will be automatically switched OFF on the driver side after start of block operations. There is no need to write input OFF.

Pr5.45	Quadrant projection positive direction compensation value	Range	Unit	Default	Related control mode			
		-1000 to 1000	0.1%	0	P			F

To set positive direction high-precision torque compensation value for quadrant projection.

Pr5.46	Quadrant projection negative direction compensation value	Range	Unit	Default	Related control mode			
		-1000 to 1000	0.1%	0	P			F

To set negative direction high-precision torque compensation value for quadrant projection.

Pr5.47	Quadrant projection compensation delay time	Range	Unit	Default	Related control mode			
		0 to 1000	ms	0	P			F

To set compensation timing delay time for quadrant projection.

Default: [ ]

Pr5.48	Quadrant projection compensation filter setting L	Range	Unit	Default	Related control mode			
		0 to 6400	0.01 ms	0	P			F

To set compensation value LPF time constant for quadrant projection.

Pr5.49	Quadrant projection compensation filter setting H	Range	Unit	Default	Related control mode			
		0 to 1000	0.1 ms	0	P			F

To set compensation value HPF time constant for quadrant projection.

Pr5.50	For manufacturer use	Range	Unit	Default	Related control mode			
		—	—	0				

Pr5.51	For manufacturer use	Range	Unit	Default	Related control mode			
		—	—	0				

Pr5.52	For manufacturer use	Range	Unit	Default	Related control mode			
		—	—	0				

Pr5.53	For manufacturer use	Range	Unit	Default	Related control mode			
		—	—	0				

Pr5.54	For manufacturer use	Range	Unit	Default	Related control mode			
		—	—	0				

Pr5.55	For manufacturer' s use	Range	Unit	Default	Related control mode			
		—	—	0				

Pleses fixed to 0.

Pr5.56	Slow stop deceleration time setting	Range	Unit	Default	Related control mode			
		0 to 10000	ms/ (1000r/min)	0	P			

Sets deceleration time for immediate stop deceleration stop deceleration processing.
This parameter will become valid when Pr6.10 "Function enhancement setting" bit 15 = 1.

Pr5.57*	Slow stop S-shape acceleration and deceleration setting	Range	Unit	Default	Related control mode			
		0 to 1000	ms	0	P			

Sets the S-shape time for immediate stop deceleration stop deceleration processing.
This parameter will become valid when Pr6.10 "Function enhancement setting" bit 15 = 1.

Pr5.58*	Modbus mirror register setting 1	Range	Unit	Default	Related control mode			
		-32768 to 32767	—	24591	P	S	T	F

Sets register address linked to Modbus register address 4418h "Mirror register 1."

Pr5.59*	Modbus mirror register setting 2	Range	Unit	Default	Related control mode			
		-32768 to 32767	—	24592	P	S	T	F

Sets register address linked to Modbus register address 4419h "Mirror register 2."

Note

- A parameter is designated as follows: Class Pr0.00 Parameter No.
- For parameters which No. have a suffix of " * ", changed contents will be validated when you turn on the control power.

Related page

- P.3-34 "Inputs and outputs on connector X4"

Default: [ ]

Pr5.60*	Modbus mirror register setting 3	Range	Unit	Default	Related control mode			
		-32768 to 32767	—	16421	P	S	T	F

Sets register address linked to Modbus register address 441Ah "Mirror register 3."

Pr5.61*	Modbus mirror register setting 4	Range	Unit	Default	Related control mode			
		-32768 to 32767	—	24613	P	S	T	F

Sets register address linked to Modbus register address 441Bh "Mirror register 4."

Pr5.62*	Modbus mirror register setting 5	Range	Unit	Default	Related control mode			
		-32768 to 32767	—	17429	P	S	T	F

Sets register address linked to Modbus register address 441Ch "Mirror register 5."

Pr5.63*	Modbus mirror register setting 6	Range	Unit	Default	Related control mode			
		-32768 to 32767	—	17418	P	S	T	F

Sets register address linked to Modbus register address 441Dh "Mirror register 6."

Pr5.64*	Modbus mirror register setting 7	Range	Unit	Default	Related control mode			
		-32768 to 32767	—	17427	P	S	T	F

Sets register address linked to Modbus register address 441Eh "Mirror register 7."

Pr5.65*	Modbus mirror register setting 8	Range	Unit	Default	Related control mode			
		-32768 to 32767	—	17419	P	S	T	F

Sets register address linked to Modbus register address 441Fh "Mirror register 8."

Pr5.66	Deterioration diagnosis convergence judgment time	Range	Unit	Default	Related control mode			
		0 to 10000	0.1s	0	P	S	T	F

Sets time for deemed convergence of real-time auto tuning load characteristics estimate when deterioration diagnosis warning function is valid (Pr6.97 bit 1 = 1)
When the setup value is 0, Pr6.31 (real-time auto tuning speed) is auto matically set by the driver internally.
※When Pr6.31(real-time auto tuning speed)=0, the deterioration diagnosis warning function of tuning load characteristics estimate(inertia ratio, friction characteristics) is invalid.

Pr5.67	Deterioration diagnosis inertia ratio upper limit	Range	Unit	Default	Related control mode			
		0 to 10000	%	0	P	S	T	F
Pr5.68	Deterioration diagnosis inertia ratio lower limit	Range	Unit	Default	Related control mode			
		0 to 10000	%	0	P	S	T	F

Sets the upper and lower limit values for inertia ratio estimate in deterioration diagnosis judgment of load characteristics estimate after completion of convergence, when deterioration diagnosis warning is valid (Pr6.97 bit 1 = 1).
※The set resolution shall be in units of 0.2 %.

Default: [ ]

Pr5.69	Deterioration diagnosis unbalanced load upper limit	Range	Unit	Default	Related control mode			
		-1000 to 1000	0.1%	0	P	S	T	F

Pr5.70	Deterioration diagnosis unbalanced load lower limit	Range	Unit	Default	Related control mode			
		-1000 to 1000	0.1%	0	P	S	T	F

Sets the upper and lower limit values for unbalanced load estimate in deterioration diagnosis judgment of load characteristics estimate after completion of convergence, when deterioration diagnosis warning is valid (Pr6.97 bit 1 = 1).
※ The set resolution shall be in units of 0.2 %.

Pr5.71	Deterioration diagnosis dynamic friction upper limit	Range	Unit	Default	Related control mode			
		-1000 to 1000	0.1%	0	P	S	T	F

Pr5.72	Deterioration diagnosis dynamic friction lower limit	Range	Unit	Default	Related control mode			
		-1000 to 1000	0.1%	0	P	S	T	F

Sets the upper and lower limit values for dynamic friction estimate in deterioration diagnosis judgment of load characteristics estimate after completion of convergence, when deterioration diagnosis warning is valid (Pr6.97 bit 1 = 1).
※ The set resolution shall be in units of 0.2 %.

Pr5.73	Deterioration diagnosis viscous friction upper limit	Range	Unit	Default	Related control mode			
		0 to 10000	0.1%/ (10000 r/min)	0	P	S	T	F

Pr5.74	Deterioration diagnosis viscous friction lower limit	Range	Unit	Default	Related control mode			
		0 to 10000	0.1%/ (10000 r/min)	0	P	S	T	F

Sets the upper and lower limit values for viscous friction coefficient estimate in deterioration diagnosis judgment of load characteristics estimate after completion of convergence, when deterioration diagnosis warning is valid (Pr6.97 bit 1 = 1).
※ The set resolution shall be in units of 0.2 %.

Pr5.75	Deterioration diagnosis velocity setting	Range	Unit	Default	Related control mode			
		-20000 to 20000	r/min	0	P	S	T	F

Outputs deterioration diagnosis velocity output (V-DIAG) when the motor velocity is in the range of Pr5.75 ± Pr4.35 (velocity coinciding width), when deterioration diagnosis warning is valid (Pr6.97 bit 1 =1).
※ Deterioration diagnosis velocity output has a 10[r/min] hysteresis.

Pr5.76	Deterioration diagnosis torque average time	Range	Unit	Default	Related control mode			
		0 to 10000	ms	0	P	S	T	F

Set time(weighted Number) required to calculate the torque command average value when deterioration diagnosis warning is valid(Pr6.97 bit1=1) and diagnosis velocity output(V-DIAG) is ON.
※ Time from diagnosis velocity output (V-DIAG) ON to the start judgment for upper and lower value of torque command average value is also a part of the set time for this parameter.
※ When the setup value is 0, the torque command average value is not calculated.

Note
- A parameter is designated as follows: Class Pr0.00 Parameter No.
- For parameters which No. have a suffix of " * ", changed contents will be validated when you turn on the control power.

Related page
- P.3-34 "Inputs and outputs on connector X4"

Default: [ ]

Pr5.77	Deterioration diagnosis torque upper limit	Range	Unit	Default	Related control mode			
		-1000 to 1000	0.1%	0	P	S	T	F

Pr5.78*	Deterioration diagnosis torque lower limit	Range	Unit	Default	Related control mode			
		-1000 to 1000	0.1%	0	P	S	T	F

Sets the upper and lower limit values for torque command average value when deterioration diagnosis warning is valid (Pr6.97 bit 1 = 1) and deterioration diagnosis velocity output (V-DIAG) is ON.

Pr5.79*	Modbus mirror register setting 9	Range	Unit	Default	Related control mode			
		-32768 to 32767	—	17410	P	S	T	F

Sets register address linked to Modbus register address 4420h "Mirror register 9."

Pr5.80*	Modbus mirror register setting 10	Range	Unit	Default	Related control mode			
		-32768 to 32767	—	17411	P	S	T	F

Sets register address linked to Modbus register address 4421h "Mirror register 10."

Pr5.81*	Modbus mirror register setting 11	Range	Unit	Default	Related control mode			
		-32768 to 32767	—	16398	P	S	T	F

Sets register address linked to Modbus register address 4422h "Mirror register 11."

Pr5.82*	Modbus mirror register setting 12	Range	Unit	Default	Related control mode			
		-32768 to 32767	—	16402	P	S	T	F

Sets register address linked to Modbus register address 4423h "Mirror register 12."

Pr5.83*	Modbus mirror register setting 13	Range	Unit	Default	Related control mode			
		-32768 to 32767	—	16411	P	S	T	F

Sets register address linked to Modbus register address 4424h "Mirror register 13."

Pr5.84*	Modbus mirror register setting 14	Range	Unit	Default	Related control mode			
		-32768 to 32767	—	16405	P	S	T	F

Sets register address linked to Modbus register address 4425h "Mirror register 14."

Pr5.85*	Modbus mirror register setting 15	Range	Unit	Default	Related control mode			
		-32768 to 32767	—	16406	P	S	T	F

Sets register address linked to Modbus register address 4426h "Mirror register 15."

Note
- A parameter is designated as follows: Class Pr0.00 Parameter No.
- For parameters which No. have a suffix of " * ", changed contents will be validated when you turn on the control power.

Related page
- P.3-34 "Inputs and outputs on connector X4"

Default: [ ]

Pr5.86*	Modbus mirror register setting 16	Range	Unit	Default	Related control mode			
		-32768 to 32767	—	0	P	S	T	F

Sets register address linked to Modbus register address 4427h "Mirror register 16."

Pr5.87	For manufacturer' s use	Range	Unit	Default	Related control mode			
		—	—	0				

Pr5.94	Position compare output condition setting	Range	Unit	Default	Related control mode			
		0～2	—	0	P			F

Select operation direction which enable position compare output
0 : Valid when Positive and Negative direction
1 : Valid only when Positive operation direction
2 : Valid only when Negative operation direction

Pr5.96	For manufacturer' s use	Range	Unit	Default	Related control mode			
		—	—	0				

Pr5.97	For manufacturer' s use	Range	Unit	Default	Related control mode			
		—	—	0				

Pr5.102	For manufacturer' s use	Range	Unit	Default	Related control mode			
		—	—	0				

Pr5.103	For manufacturer' s use	Range	Unit	Default	Related control mode			
		—	—	0				

Pr5.105	For manufacturer' s use	Range	Unit	Default	Related control mode			
		—	—	0				

Note
- A parameter is designated as follows: Class Pr0.00 Parameter No.
- For parameters which No. have a suffix of " * ", changed contents will be validated when you turn on the control power.

Related page
- P.3-34 "Inputs and outputs on connector X4"

1. Details of parameter

[Class 6] Special setting

Default: [ ]

Pr6.00	Analog torque feed forward conversion gain	Range	Unit	Default	Related control mode			
		0 to 100	0.1 V/100 %	0	P	S		F

- Set the input gain of analog torque feed forward.
  0 to 9 are invalid.

<Usage example of Analog torque feed forward>

- Setting bit 5 place of Pr6.10 Function expansion setup to 1 enables the analog torque feed forward. When the analog input 3 is used by another function (e.g. analog torque limit), the function becomes invalid.
- The voltage (V) applied to the analog input 3 is converted to the torque via Pr6.00 Analog torque feed forward conversion gain setup and added to the torque command (%): in CCW direction if it is positive voltage or in CW direction if negative.
- The conversion of analog input 3, input voltage [V], to the torque command [%] to the motor may be expressed mathematically as follows:

Torque command (%) = 100 × input voltage (V) / (Pr6.00 setup value × 0.1)

Pr6.02	Velocity deviation excess setup	Range	Unit	Default	Related control mode			
		0 to 20000	r/min	0	P			

When the speed deviation (difference between internal positional command and actual speed) exceeds this value, Err24.2 Speed over deviation protection occurs.
This protection is not detected when the setup value is 0.

Pr6.04	JOG trial run command speed	Range	Unit	Default	Related control mode			
		0 to 500	r/min	300	P	S	T	F

Related page

Set up the command speed used for JOG trial run (velocity control).
Before using, refer to P.4-88 Preparation Trial Run.

Pr6.05	Position 3rd gain valid time	Range	Unit	Default	Related control mode			
		0 to 10000	0.1 ms	0	P			F

- Set up the time at which 3rd gain becomes valid.
- When not using this parameter, set Pr6.05 to 0 and Pr6.06 to 100.
- This is valid for only position control/full-closed control.

Pr6.06	Position 3rd gain scale factor	Range	Unit	Default	Related control mode			
		50 to 1000	%	100	P			F

- Set up the 3rd gain by a multiplying factor of the 1st gain:
- 3rd gain = 1st gain × Pr6.06/100

Pr6.07	Torque command additional value	Range	Unit	Default	Related control mode			
		−100 to 100	%	0	P	S		F

- Set up the offset load compensation value usually added to the torque command in a control mode except for the torque control mode.
- Update this parameter when the vertical axis mode for real time auto-tuning is valid.

Note
- A parameter is designated as follows: Class Pr0.00 Parameter No.
- For parameters which No. have a suffix of " * ", changed contents will be validated when you turn on the control power.

Related page
- P.3-34 "Inputs and outputs on connector X4"

Default: [ ]

Pr6.08	Positive direction torque compensation value	Range	Unit	Default	Related control mode			
		−100 to 100	%	0	P			F

- Set up the dynamic friction compensation value to be added to the torque command when forward positional command is fed.
- Update this parameter when the friction compensation mode for real time auto-tuning is valid.

Pr6.09	Negative direction torque compensation value	Range	Unit	Default	Related control mode			
		−100 to 100	%	0	P			F

- Set up the dynamic friction compensation value to be added to the torque command when negative direction positional command is fed.
- Update this parameter when the friction compensation mode for real time auto-tuning is valid.

Pr6.10	Function expansion setup	Range	Unit	Default	Related control mode			
		-32768 to 32767	—	16	P	S	T	F

Set up the function in unit of bit.

	Function	Setup value	
		[0]	1
bit 0	Not used	Fixed to 0.	
bit 1	Load fluctuation control funtion	Invalid	Valid
bit 2	Not used	Fixed to 0.	
bit 3	Inertia ratio switching	Invalid	Valid
bit 4	Current response improvement	Invalid	Valid
bit 5	Analog torque FF	Invalid	Valid
bit 6 to 8	Not used	Fixed to 0.	
bit 9	For manufacturer's use	Fixed to 0.	
bit 10	Positional deviation of falling prevention function during alarm	Invalid (hold)	Valid (clear)
bit 11	Encoder overheat abnormality protectiondetection	Invalid	Valid *1
bit 12	Not used	Fixed to 0.	
bit 13	For manufacturer's use	Fixed to 0.	
bit 14	Load variation suppression functionautomatic adjustment setting	Invalid	Valid
bit 15	Slow stop function.	Invalid	Valid*2

*The least significant bit is considered as bit0.
*1 When the encoder overheat alarm is generated, Err15.1 "Encoder overheat abnormality protection" is generated together.
*2 Valid only when position control setting (Pr0.01 = 0) and block operation setting is invalid (Pr6.28 = 0).

Pr6.11	Current response setup	Range	Unit	Default	Related control mode			
		10 to 300	%	100	P	S	T	F

Set the default value as 100%, and adjust the current response. Improve current responsiveness by setting the value to more than 100 %.
(Note)Setup range of versions before functional extension 4 are 10 to 100 %.

Default: [ ]

Pr6.13	2nd Inertia ratio	Range	Unit	Default	Related control mode			
		0 to 10000	%	250	P	S	T	F

Set 2nd inertia ratio.
You can set up the ratio of the load inertia against the rotor (of the motor) inertia.

Pr6.13 = (load inertia/ rotor inertia) × 100 [%]

Caution: If the inertia ratio is correctly set, the setup unit of Pr1.01 and Pr1.06 becomes (Hz). When the inertia ratio of Pr0.04 is larger than the actual, the setup unit of the velocity loop gain becomes larger, and when the inertia ratio of Pr0.04 is smaller than the actual, the setup unit of the velocity loop gain becomes smaller.

Pr6.14	Emergency stop time at alarm	Range	Unit	Default	Related control mode			
		0 to 1000	1 ms	200	P	S	T	F

Set up the time allowed to complete emergency stop in an alarm condition. Exceeding this time puts the system in alarm state.
When setup value is 0, immediate stop is disabled and the immediate alarm stop is enabled.

Pr6.15	2nd over-speed level setup	Range	Unit	Default	Related control mode			
		0 to 20000	r/min	0	P	S	T	F

When the motor speed exceeds this setup time, Err26.1 2nd over-speed protection will be activated.
The over-speed level becomes 1.2 times of the motor max. speed by setting up this to 0.

Pr6.16	For manufacturer's use	Range	Unit	Default	Related control mode			
		—	—	0				

Fixed to 0.

Pr6.17 *	Front panel parameter writing selection	Range	Unit	Default	Related control mode			
		0 to 1	—	0	P	S	T	F

Specify the EEPROM writing procedure when parameter is edited form the front panel.

Setup value	Writing
[0]	Do not write to EEPROM at the same time
1	Write to EEPROM at the same time

Pr6.18 *	Power-up wait time	Range	Unit	Default	Related control mode			
		0 to 100	0.1s	0	P	S	T	F

Set up the standard initialization time (1.5 s + α) after power-up.
For example, when setup value is 10, then 1.5 s + (10 × 0.1 s) = approx. 2.5 s.

Pr6.19 *	Encoder Z phase setup	Range	Unit	Default	Related control mode			
		0 to 32767	pulse	0	P	S	T	F

If the number of output pulses per one motor revolution after division of pulse output is not an integer, fine adjust the width of encoder Z phase.

Default: [ ]

Pr6.20 *	Z-phase setup of external scale	Range	Unit	Default	Related control mode
		0 to 400	μs	0	F

Set up the Z phase regenerative width of external scale in unit of time. Even if the width of Z phase signal cannot be detected because the width equivalent of the travel distance from the external scale is too short, the Z phase signal will be output for at least the period set to this parameter.

Pr6.21 *	Serial absolute external scale Z phase setup	Range	Unit	Default	Related control mode
		0 to 2^{28}	pulse	0	F

Full-closed control using serial absolute external scale. When outputting pulses by using the external scale as the source of the output, set the Z phase output interval in units of A phase output pulses of the external scale (before multiplied by 4).

Setup value	Content
[0]	Output Z phase only at absolute 0 position of external scale.
1 to 268435456	After the power is fed to the driver, the Z phase, as it crosses the zero at the absolute position of external scale, is output in synchronous with the A phase. Subsequently, the Z phase is output at the A phase output pulse intervals set to this parameter.

When Pr6.58 ≠ 0, The absolute position output of the external scale is identical to the Z phase of the Pr6.58 setting value.

■ Serial absolute external scale

• After the driver control power supply is turned on, the Z-phase is output for the first time only when the external scale absolute position zero is traversed, and, using this position as a datum, the Z-phase is output with the A-phase pulse interval that is set by Pr6.21. However, when Pr6.21 = 0 is true, the Z-phase is output only at the absolute zero position.

• The first Z-phase output after switching on the driver control power supply can be set to any external scale absolute position by the setting of Pr6.58. This function assumes use in case absolute zero position of external scale does not exist within the movable range of the machine.

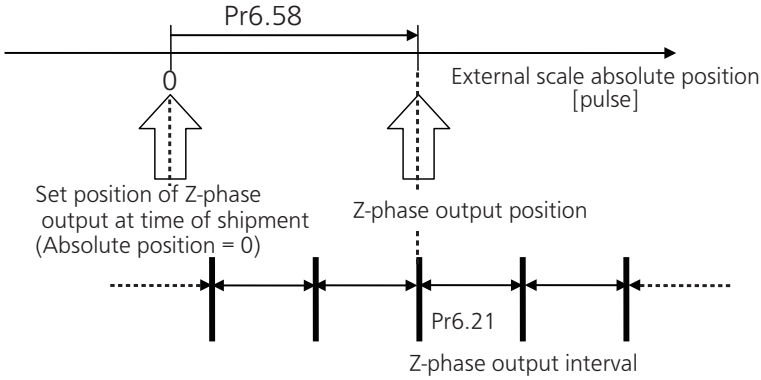

Default: [ ]

Pr6.22 *	A, B phase external scale pulse output method selection	Range	Unit	Default	Related control mode			
		0 to 1	—	0				F

Select the pulse regeneration method of A, B and Z parallel external scale.

Setup value	Regenerating method
[0]	Directly output the signals from A, B and Z parallel external scales.
1	Output A and B phase signals recovered from A, B and Z parallel external scales. Z-phase is output directly.

Pr6.23	Load fluctuation compensating gain	Range	Unit	Default	Related control mode			
		−100 to 100	%	0	P	S		F

Sets the compensation gain for the load fluctuation.

Pr6.24	Load fluctuation compensating filter	Range	Unit	Default	Related control mode			
		10 to 2500	0.01 ms	53	P	S		F

Sets the filter time constant for the load fluctuation.

Pr6.25	For manufacturer's use	Range	Unit	Default	Related control mode			
		—	—	0				

Pr6.26	For manufacturer's use	Range	Unit	Default	Related control mode			
		—	—	2				

Pr6.27 *	Alarm latch time selection	Range	Unit	Default	Related control mode			
		0 to 10	—	5	P	S	T	F

Set up the latch time.

Setup value	Content	
0	Latch time: infinite	
1	Latch time	1 [s]
2		2 [s]
3		3 [s]
4		4 [s]
[5]		5 [s]
6		6 [s]
7		7 [s]
8		8 [s]
9		9 [s]
10		10 [s]

Default: [ ]

Pr6.28 *	Special function selection	Range	Unit	Default	Related control mode			
		0 to 4	—	0	P			F

Selects between enabling and disabling the block operation function.

Setup value	Writing
[0]	Block operation disabled(pulse line valid)
1	Modbus communication control block motion function is valid(pulse line invalid).
2	Input signal control block motion function is valid(pulse line valid).
3	For manufacturer's use
4	Input signal control block motion function is valid(pulse line invalid).

Pr6.30	For manufacturer's use	Range	Unit	Default	Related control mode			
		—	—	0				

Fixed to 0.

Pr6.31	Real time auto tuning estimation speed	Range	Unit	Default	Related control mode			
		0 to 3	—	1	P	S	T	F

Set up the load characteristics estimation speed with the real time auto tuning being valid. A higher setup value assures faster response to a change in load characteristics but increases variations in disturbance estimation. Result of estimation is saved to EEPROM every 30 minutes.

Setup value	Mode	Description
0	No change	Stop estimation of load characteristics.
[1]	Almost constant	Response to changes in load characteristics in every minute.
2	Slower change	Response to changes in load characteristics in every second.
3 *	Faster change	Obtain best suitable estimation in response to changes in load characteristics.

* If the automatic oscillation detection is enabled by the support software PANATERM, the setup value 3 is used.

Note
- A parameter is designated as follows: Class Pr0.00 Parameter No.
- For parameters which No. have a suffix of " * ", changed contents will be validated when you turn on the control power.

Related page
- P.3-34 "Inputs and outputs on connector X4"

Default: [ ]

Pr6.32	Real time auto tuning custom setup	Range	Unit	Default	Related control mode			
		−32768 to 32767	—	0	P	S	T	F

When the operation mode of real time auto tuning is set to the customize (Pr0.02 = 6), set the automatic adjusting function as shown below.
When the two-degree-of-freedom control mode is set , use with Pr6.32 = 0.

Bit	Content	Description
1 to 0	Load characteristics estimation *	Enable/disable the load characteristics estimation function. Setup value: [0] Disable; 1 Enable * If the load characteristics estimation is disabled, the current setup cannot be changed even if the inertia ratio is updated according to the estimated value. When the torque compensation is updated by the estimated value, it is cleared to 0 (invalid). * To enable the load characteristics measurement, set Pr6.31 Real time auto tuning estimation speed to a value other than 0 (stop estimation).
3 to 2	Inertia ratio update	Set up update to be made based on result of the load characteristics estimation of Pr0.04 Inertia ratio. Setup value: [0] Use the current setup.; 1 Update by the estimated value. * To enable the inertia ratio update, set Bits 1-0 (load characteristic measurement) to 1 (enable). The inertia ratio will not be updated unless both settings are made valid.
6 to 4	Torque compensation	Set up the update to be made according to the results of load characteristics estimation of Pr6.07 Torque command additional value, Pr6.08 positive direction torque compensation value and Pr6.09 negative direction torque compensation value.

Setup value	Function	Compensation setup		
		Pr6.07	Pr6.08	Pr6.09
[0]	Use current setup			
1	Disable torque compensation	0 clear	0 clear	0 clear
2	Vertical axis mode	Update	0 clear	0 clear
3	Friction compensation (low)	Update	Low	Low
4	Friction compensation (middle)	Update	Middle	Middle
5	Friction compensation (high)	Update	High	High

* To enable the torque compensation (set to 2-5), set Bits 3-2 (Inertia ratio update) to 1 (enable). It is not possible to update only the torque compensation.

(continued)

Note
- A parameter is designated as follows: Class Pr0.00 Parameter No.
- For parameters which No. have a suffix of " * ", changed contents will be validated when you turn on the control power.

Related page
- P.3-34 "Inputs and outputs on connector X4"

Default: [ ]

7	Stiffness setup	Enable/disable the basic gain setup to be made according to Pr0.03 Real time auto tuning mechanical stiffness selection. Setup value / Function [0] Disable 1 Enable * To set this setting to a value other than 0, set Bits 3-2 (Inertia ratio update) to 1 (enable). Inertia ratio is enabled/disabled by the setting of Bits 1 and 0 (load characteristics measurement).
8	Fixed parameter setup	Enable/disable the change of parameter that is normally set at a fixed value. Setup value / Function [0] Use the current setup. 1 Set to a fixed value. * To set this setting to a value other than 0, set Bits 3-2 (Inertia ratio update) to 1 (enable). Inertia ratio is enabled/disabled by the setting of Bits 1 and 0 (load characteristics measurement).
10 to 9	Gain switching setup	Select the gain switching related parameter to be used when the real time auto tuning is enabled. Setup value / Function [0] Use the current setup. 1 Disable gain switching. 2 Enable gain switching. * To set this setting to a value other than 0, set Bits 3-2 (Inertia ratio update) to 1 (enable). Inertia ratio is enabled/disabled by the setting of Bits 1 and 0 (load characteristics measurement).

Caution

This parameter should be setup bit by bit. To prevent setting error, use of the setup support software is recommended when editing parameter.
Do not change this parameter while the motor is running. Updated parameters will be effective when the motor stops after the result of load characteristics measurement is confirmed.

<Setup procedure of bitwise parameter>
When setting parameter to a value other than 0, calculate the setup value of Pr6.32 in the following procedure.

1) Identify the LSB of the setup.
   Example: LSB of the torque compensation function is 4.
2) Multiply the setup value by power of 2 (LSB).
   Example: To set the torque compensation function to friction compensation (middle): $2^4 \times 4 = 64$.
3) Perform steps 1) and 2) for every setups, sum up the values which are to be Pr6.32 setup value.
   Example: Load characteristics measurement = enable, inertia ratio update = enable, torque compensation = friction compensation (middle), stiffness setup = enable, fixed parameter = set to a fixed value, gain switching setup = enable, then,
   $2^0 \times 1 + 2^2 \times 1 + 2^4 \times 4 + 2^7 \times 1 + 2^8 \times 1 + 2^9 \times 2 = 1477$

Note

- A parameter is designated as follows: Class Pr0.00 Parameter No.
- For parameters which No. have a suffix of " * ", changed contents will be validated when you turn on the control power.

Related page
- P.3-34 "Inputs and outputs on connector X4"

Default: [ ]

Pr6.33	For manufacturer's use	Range	Unit	Default	Related control mode			
		—	—	1000				

Fixed to 1000.

Pr6.34	Hybrid vibration suppression gain	Range	Unit	Default	Related control mode			
		0 to 30000	0.1 /s	0				F

Set up the hybrid vibration suppression gain for full-closed controlling.
First set it to the value identical to that of poison loop gain, and then fine tune as necessary.

Pr6.35	Hybrid vibration suppression filter	Range	Unit	Default	Related control mode			
		0 to 32000	0.01 ms	10				F

Set up the time constant of the hybrid vibration suppression filter for full-closed controlling. While driving under full-closed control, gradually increase the setup value and check changes in the response.

Pr6.36	Dynamic brake operation input	Range	Unit	Default	Related control mode			
		0 to 1	—	0	P	S	T	F

Sets between enabling and disabling dynamic brake (DB) operation input by I/O.
Note) This function is available only when the main power is turned off.
0: Disabled 1: Enabled

Pr6.37	Oscillation detecting level	Range	Unit	Default	Related control mode			
		0 to 1000	0.1 %	0	P	S	T	F

Set up the oscillation detecting level.
If the effective value of the torque vibration, which is calculated from the motor vibration, is the set value, or higher, in this case oscillation detection warning will be issued. If the setting value is 0, then oscillation detection warning is disabled.

Pr6.38 *	Alarm mask setup	Range	Unit	Default	Related control mode			
		−32768 to 32767	—	4	P	S	T	F

Note
- A parameter is designated as follows: Class Pr0.00 Parameter No.
- For parameters which No. have a suffix of " * ", changed contents will be validated when you turn on the control power.

Related page
- P.3-34 "Inputs and outputs on connector X4"

Default: [ ]

Pr6.39	Alarm mask setup 2	Range	Unit	Default	Related control mode			
		−32768 to 32767	—	0	P	S	T	F

Set up the alarm detection mask. Placing 1 to the corresponding bit position disables detection of the alarm condition.

Warning number	Warning name	bit	
		Pr6.38	Pr6.39
A0	Overload warning	bit7	—
A1	Over-regeneration warning	bit5	—
A2	Battery warning	bit0	—
A3	Fan warnin	bit6	—
A4	Encoder communication warning	bit4	—
A5	Encoder overheat warning	bit3	—
A6	Oscillation detection warning	bit9	—
A7	Lifetime detection warning	bit2	
A8	External scale error warning	bit8	—
A9	External scale communication warning	bit10	—
AC	Deterioration diagnosis warning	—	bit7
C3	Main power off warning	bit12	—

Pr6.41	Anti-vibration depth 1	Range	Unit	Default	Related control mode			
		0 to 1000	—	0	P			F

Set the anti-vibration depth of 1st damping function.

Pr6.42	Two-stage torque filter time constant	Range	Unit	Default	Related control mode			
		0 to 2500	0.01 ms	0	P	S	T	F

Set the time constant of the filter according to the torque command. The setup value 0 disables filter. Regardless of gain selecting state, this setting always remains valid.

Pr6.43	Two-stage torque filter attenuation term	Range	Unit	Default	Related control mode			
		0 to 1000	—	0	P	S	T	F

Set the attenuation term of 2-stage torque filter.

Note
- A parameter is designated as follows: Class Pr0.00 Parameter No.
- For parameters which No. have a suffix of " * ", changed contents will be validated when you turn on the control power.

Related page
- P.3-34 "Inputs and outputs on connector X4"

Default: [ ]

Pr6.47*	Function expansion settings 2	Range	Unit	Default	Related control mode			
		−32768 to 32767	—	1	P	S	T	F

Set up the function in unit of bit.

	Function	Setup value	
		0	1
bit 0	Two-degree-of-freedom control mode	Invalid	Valid*2
bit 1	Not used	Fixed to 0	
bit 2	Encoder/external scale communication error judgment setting	Compatible with previous setting	Relax error/ alarm judgment.
bit 3	Auto tuning selection*1	Position control type	Synchronous type
bit 4 to 7	Not used	Fixed to 0	
bit 8	For manufacturer's use	Fixed to 0	
bit 9 to 10	Not used	Fixed to 0	
bit 11	Immediate stop alarm extension	Invalid	Valid
bit 12 to 13	Manufacturer use	Fixed to 0	
bit 14	Quadrant projection suppression function	Invalid	Valid
bit 15	Not used Fix at 0.	Fixed to 0	

* The least significant bit is considered as bit0.
* Regarding bit3 (two-degree-of-freedom control real-time auto tuning selection), the function is available only when bit0 is set to 1: Enabled.
*1 For details of the type, refer to P.5-11 Real time auto tuning (two-degree-of-freedom control, position control type) and P.5-19 Real time auto tuning (two-degree-of-freedom control, synchronous type).
*2 When Pr0.01=3,4,5 is set, Two-degree-of-freedom control mode is disabled internally.

Pr6.48	Adjust filter	Range	Unit	Default	Related control mode			
		0 to 2000	0.1 ms	Size A:11 Size B,C:12 Size D,E,F,G,H:17 *1	P	S		F

Set time constant of adjustment filter for two-degree-of-freedom control (position and speed).
*1 Some models of H-frame are different.Please refer to the specification for details.

Pr6.49	Adjust/Torque command attenuation term	Range	Unit	Default	Related control mode			
		0 to 99	—	15	P			F

Set attenuation term of the command filter and adjustment filter for two-degree-of-freedom control (position and speed).
Decimal notation: 1st digit sets command filter and 2nd digit sets adjustment filter.

value of digit	Content
0 to 4	Without attenuation term (functions as 1st filter).
5 to 9	The 2nd filter (attenuation term ξ is 1.0, 0.86, 0.71, 0.50 and 0.35, in that order).

But,when Pr2.13(Selection of damping filter switching) is set up 4,The 2nd filter attenuation term fixxed 1.0.
Example: To set command filter ξ = 1.0, adjustment filter 1 ξ = 0.71:
Setup value = 75 1st digit = 5 (ξ = 1.0), 2nd digit = 7 (ξ = 0.71)
Pr2.22 Command smoothing filter is applied as time constant of command filter.

Note
- A parameter is designated as follows: Class Pr0.00 Parameter No.
- For parameters which No. have a suffix of " * ", changed contents will be validated when you turn on the control power.

Related page
- P.3-34 "Inputs and outputs on connector X4"

Default: [ ]

Pr6.50	Viscous friction compensation gain	Range	Unit	Default	Related control mode			
		0 to 10000	0.1 %/(10000 r/min)	0	P	S		F

Command velocity is multiplied by this setting and the result is added to the torque command as compensation value.
The unit is [Rated torque 0.1 %/(10000 r/min)].

Pr6.51	Immediate cessation completion wait time	Range	Unit	Default	Related control mode			
		0 to 10000	ms	0	P	S	T	F

When immediate stop alarm is occurs, turn off brake release output (BRK-OFF) and set the time during which the current flows through the motor.

Pr6.52	For manufacturer's use	Range	Unit	Default	Related control mode			
		—	—	0				

Fixed to 0.

Pr6.53	For manufacturer's use	Range	Unit	Default	Related control mode			
		—	—	0				

Fixed to 0.

Pr6.54	For manufacturer's use	Range	Unit	Default	Related control mode			
		—	—	0				

Fixed to 0.

Note
- A parameter is designated as follows: Class Pr0.00 Parameter No.
- For parameters which No. have a suffix of " * ", changed contents will be validated when you turn on the control power.

Related page
- P.3-34 "Inputs and outputs on connector X4"

Default: [ ]

Pr6.57	Torque saturation anomaly detection time	Range	Unit	Default	Related control mode			
		0 to 5000	ms	0	P	S		F

Set torque saturation error protection detect time.
When torque saturation still continues after the preset time, Err16.1 Torque saturation error protection occurs.
When the setup value is 0, this function is disabled and no alarm will generate.

- For example, if setting is 5000, Err16.1 will generate when torque saturation continues longer than 5 sec.
- During torque controlling, this function is disabled and Err16.1 will not generate.
- During immediate stop alarm, this function is disabled and Err16.1 is not generated.

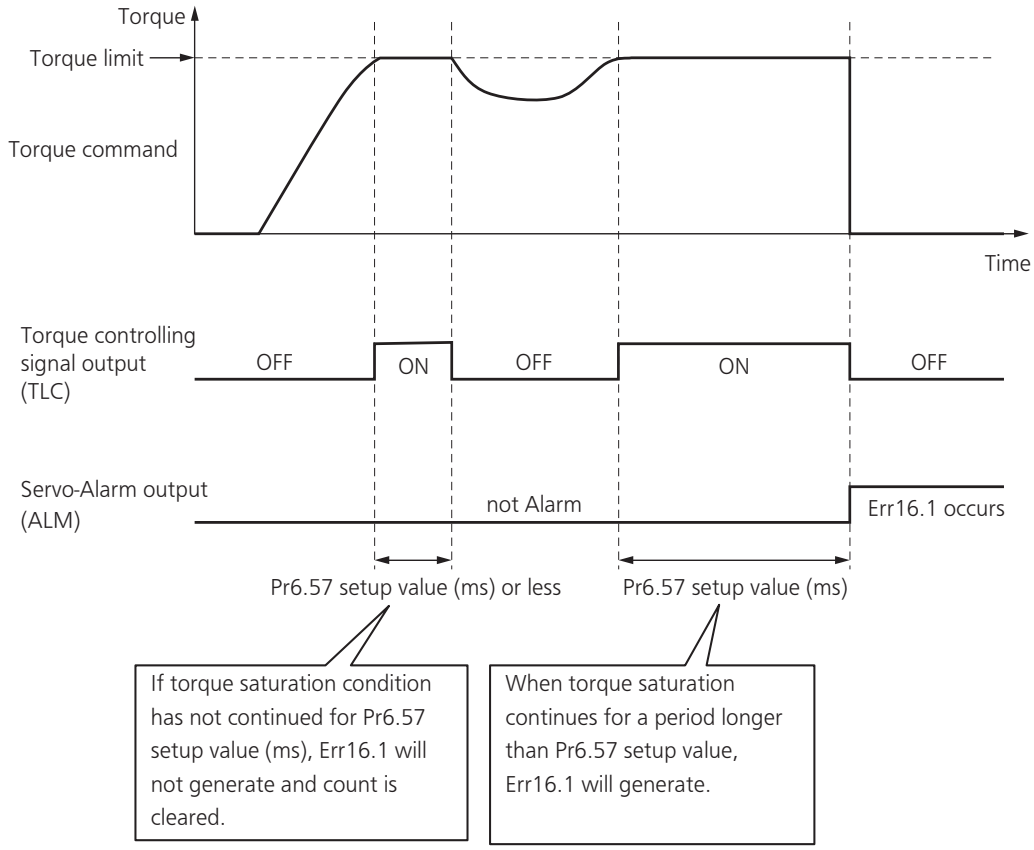

Pr6.58*	Serial absolute external scale Z phase shift amoun	Range	Unit	Default	Related control mode			
		-2147483648 to 2147483647	pulse	0	P	S	T	F

Sets the absolute position to output external scale Z-phase when serial absolute external scale is used.

Pr6.59	For manufacturer's use	Range	Unit	Default	Related control mode			
		—	—	0				

Note
- A parameter is designated as follows: Class Pr0.00 Parameter No.
- For parameters which No. have a suffix of " * ", changed contents will be validated when you turn on the control power.

Related page
- P.3-34 "Inputs and outputs on connector X4"

Default: [ ]

Pr6.60	2nd damping filter depth	Range	Unit	Default	Related control mode			
		0 to 1000	—	0	P			F

Sets the damping depth of the 2nd resonance oppression notch filter.

Pr6.61	1st resonance frequency	Range	Unit	Default	Related control mode			
		0 to 3000	0.1 Hz	0	P			

Sets the resonance frequency for the load of model 1 type vibration control filter.

Pr6.62	1st resonance damping ratio	Range	Unit	Default	Related control mode			
		0 to 1000	—	0	P			

Sets the resonance damping ratio of the 1st model type resonance oppression notch filter.

Pr6.63	1st antiresonance frequency	Range	Unit	Default	Related control mode			
		0 to 3000	0.1Hz	0	P			

Sets the antiresonance frequency of the 1st model type resonance oppression notch filter.

Pr6.64	1st antiresonance damping ratio	Range	Unit	Default	Related control mode			
		0 to 1000	—	0	P			

Sets the antiresonance damping ratio of the 1st model type resonance oppression notch filter.

Pr6.65	1st response frequency	Range	Unit	Default	Related control mode			
		0 to 3000	0.1Hz	0	P			

Sets the response frequency of the 1st model type resonance oppression notch filter.

Pr6.66	2nd resonance frequency	Range	Unit	Default	Related control mode			
		0 to 3000	0.1Hz	0	P			

Sets the resonance frequency of the 2nd model type resonance oppression notch filter.

Pr6.67	2nd resonance damping ratio	Range	Unit	Default	Related control mode			
		0 to 1000	—	0	P			

Sets the resonance damping ratio of the 2nd model type resonance oppression notch filter.

Pr6.68	2nd antiresonance frequency	Range	Unit	Default	Related control mode			
		0 to 3000	0.1Hz	0	P			

Sets the antiresonance frequency of the 2nd model type resonance oppression notch filter.

Note
- A parameter is designated as follows: Class Pr0.00 Parameter No.
- For parameters which No. have a suffix of " * ", changed contents will be validated when you turn on the control power.

Related page
- P.3-34 "Inputs and outputs on connector X4"

Default: [ ]

Pr6.69	2nd antiresonance damping ratio	Range	Unit	Default	Related control mode			
		0 to 1000	—	0	P			

Sets the antiresonance damping ratio of the 2nd model type resonance oppression notch filter.

Pr6.70	2nd response frequency	Range	Unit	Default	Related control mode			
		0 to 3000	0.1 Hz	0	P			

Sets the response frequency of the 2nd model type resonance oppression notch filter.

Pr6.71	3rd damping filter depth	Range	Unit	Default	Related control mode			
		0 to 1000	—	0	P			F

Sets the damping depth of the 3rd resonance oppression notch filter.

Pr6.72	4th damping filter depth	Range	Unit	Default	Related control mode			
		0 to 1000	—	0	P			F

Sets the damping depth of the 4th resonance oppression notch filter.

Pr6.73	Load estimation filter	Range	Unit	Default	Related control mode			
		0 to 2500	0.01 ms	0	P	S		F

Sets the filter time constant for the load estimation.

Pr6.74	Torque compensating frequency 1	Range	Unit	Default	Related control mode			
		0 to 5000	0.1Hz	0	P	S		F

Sets the filtering frequency 1 (F1)for the output of velocity control.
Pr6.74(Torque compensating frequency 1) and Pr6.75(Torque compensating frequency 2) are inzhe following range,Ttorque compensating is valid.
(Pr6.75 × 32) ⩾ Pr6.74 > Pr6.75 ⩾ 1.0 Hz

Pr6.75	Torque compensating frequency 2	Range	Unit	Default	Related control mode			
		0 to 5000	0.1Hz	0	P	S		F

Sets the filtering frequency 2(F2) for the output of velocity control.
Pr6.74(Torque compensating frequency 1) and Pr6.75(Torque compensating frequency 2) are inzhe following range,Ttorque compensating is valid.
(Pr6.75 × 32) ⩾ Pr6.74 > Pr6.75 ⩾ 1.0 Hz

Pr6.76	Number of load estimation	Range	Unit	Default	Related control mode			
		0 to 8	—	0	P	S		F

Sets the number (N)for the load estimation.

Note
- A parameter is designated as follows: Class Pr0.00 Parameter No.
- For parameters which No. have a suffix of " * ", changed contents will be validated when you turn on the control power.

Related page
- P.3-34 "Inputs and outputs on connector X4"

Default: [ ]

Pr6.78	For manufacturer's use	Range	Unit	Default	Related control mode			
		—	—	0				

Fixed to 0.

Pr6.79	For manufacturer's use	Range	Unit	Default	Related control mode			
		—	—	0				

Fixed to 0.

Pr6.87	For manufacturer's use	Range	Unit	Default	Related control mode			
		—	—	0				

Fixed to 0.

Pr6.88*	Absolute multi-rotation data upper limit	Range	Unit	Default	Related control mode			
		0 to 65534	—	0	P	S	T	F

Sets the upper limit value for absolute multi-rotation data.
Multi rotation data will change to 0 when this set value has been exceeded.
Inversely, it will change to the set value in case it goes lower than 0.
Internal value will be set to 65535 in case Pr0.15 is set to 0 or 2 (absolute mode).
This parameter is invalid in case it is set to 1 or 3.

Pr6.97	Function expansion setting 3	Range	Unit	Default	Related control mode			
		-2147483648 to 2147483647	—	0	P	S	T	F

Sets various function in bit units:

	function	Setup value	
bit0	Quadrant projection compensation function enhancement	0:Invalid	1:valid
bit1	Deterioration diagnosis warning function	0:Invalid	1:valid
bit2	Expansion of Allowable motor operating range abnormal protection	0:Invalid	1:valid
bit3 to 4	For manufacturer use	fixed to 0.	
bit5	Deterioration diagnosis torque command average value latch	0:Invalid	1:valid
bit6	Location information switching during backlash correction	0: Encoder pulse cumulative value of waveform graphic includes backlash correction amount	
		1: Encoder pulse accumulation value of waveform graphic does not include backlash correction amount	
bit7 to 14	For manufacturer use	fixed to 0.	
bit15	Mode Switch Restriction function Undo	0:Invalid	1:valid
bit16 to 31	For manufacturer use	fixed to 0.	

*bit 0 is the least significant bit.

Note

- A parameter is designated as follows: Class Pr0.00 Parameter No.
- For parameters which No. have a suffix of " * ", changed contents will be validated when you turn on the control power.

Related page
- P.3-34 "Inputs and outputs on connector X4"

Default: [ ]

Pr6.98*	Function expansion setting 4	Range	Unit	Default	Related control mode			
		-2147483648 to 2147483647	—	0	P	S	T	F

Sets various function in bit units:

bit0-21	For manufacturer use	fixed to 0.
bit22	Effective Bit Expansion of Multiple Rotation Data	0:Invalid(-256 ～ 255rotation)
		1:Valid(-32768 ～ 32767rotation)
bit23-27	For manufacturer use	fixed to 0.
bit28	Start of block operation when servo is turned on	0:Invalid
		1:Valid
bit29	Extension of start of block operatio when servo is turned on	0:Invalid
		1:Valid
bit29-31	For manufacturer use	fixed to 0.

*bit 0 is the least significant bit.

Note
- A parameter is designated as follows: Class Pr0.00 Parameter No.
- For parameters which No. have a suffix of " * ", changed contents will be validated when you turn on the control power.

Related page
- P.3-34 "Inputs and outputs on connector X4"

1. Details of parameter

[Class 7] Special setting

Default: [ ]

Pr7.04	Backlash correction selection	Range	Unit	Default	Related control mode
		0 to 7	—	0	P

Enable/disable backlash compensation and set the direction of movement during compensation.

bit 1-0: Enable/disable backlash compensation and select direction of movement during compensation

00b: disable
01b: correct at first positive movement after servo on.
10 b: correct at first negative movement after servo on.
11 b: manufacturer used

bit 2: extension of backlash correction state holding condition

0: 0 value setting of correction amount during servo OFF
1: Maintain correction amount during servo OFF

bit 3: Manufacturer used

Pr7.05	Backlash correction amount	Range	Unit	Default	Related control mode
		-1073741824 to 1073741823	pulse	0	P

Sets the backlash (mechanical gap in the drivetrain) correction amount during position control.

Pr7.06	Backlash correction time constant	Range	Unit	Default	Related control mode
		0 to 6400	0.01ms	0	P

Sets the backlash (mechanical gap in the drivetrain) correction time constant during position control.

Pr7.14*	Main power turn-off warning detection time	Range	Unit	Default	Related control mode
		0 to 2000	ms	0	P S T F

Sets the time elapsed before the main power turn-off warning is detected when a main power turn-off state continues.

Setup value	Function
0 to 9	Warning detection disabled
10 to 1999	Warning detection enabled (unit [ms])
2000	Warning detection disabled

Note) To cause the main power turn-off warning detection to occur earlier than turn-off detection, maintain the relationship "Pr7.14 < Pr5.09" when this parameter is set.
In addition, when the time set for Pr7.14 is long and the P-N voltage at the main power converter area is reduced to the specified value or below before the warning is detected, Err13.0 "Main power insufficient voltage protection" is invoked earlier than the warning.

All other parameters will be manufacturers use.Please do not change the default parameters.

Note
- A parameter is designated as follows: Class Pr0.00 Parameter No.
- For parameters which No. have a suffix of " * ", changed contents will be validated when you turn on the control power.

Related page
- P.3-34 "Inputs and outputs on connector X4"

Default: [ ]

Pr7.18	Retention range of backlash compensation	Range	Unit	Default	Related control mode			
		0 to 2147483647	command unit	0	P			

Servo off → Set the insensitivity zone for backlash compensation when open.
When this setting is 0, the function is disabled.
This parameter does not depend on the Pr 7.04 bit 2 setting.

Pr7.22*	Special function enhancement setting 1	Range	Unit	Default	Related control mode			
		−32768 to 32767	—	0	P	S	T	F

Sets various function in bit units:

bit	Function	Setup value	
bit0-3	Not used	Fixed to 0.	
bit4	external scale position information monitor function setting under semi-closed control	0:Invalid	1:Valid
bit5-15	Not used	Fixed to 0.	

*bit 0 is the least significant bit.
*For bit 4 (external scale position information monitor function setting under semi-closed control"), external scale position information can be monitored regardless of the setting of this bit, in case of full closed control.

Pr7.90	RS232/RS485/Modbus communication continuous receive error detection count	Range	Unit	Default	Related control mode			
		0 to 999	—	0	P	S	T	F

Sets the receive error detection count of the RS232/RS485/Modbus communication. Err83.2 "RS232/RS485/Modbus communication continuous error protection" is generated when a reception error occurs for the set value of this parameter or more.The error detection is disabled when 0 is set.

All other parameters will be manufacturers use.Please do not change the default parameters.

Note
- A parameter is designated as follows: Class Pr0.00 Parameter No.
- For parameters which No. have a suffix of " * ", changed contents will be validated when you turn on the control power.

Related page
- P.3-34 "Inputs and outputs on connector X4"

Default: [ ]

Pr7.120	Absolute scale offset 1	Range	Unit	Default	Related control mode			
		-2147483648 to 2147483647	rotation/pulse (External scale, higher 32 bits)	0	P	S	T	F

When performing the homing in the absolute mode, the amplifier automatically sets up the difference (offset value) between the encoder 0 position (or external scale 0 position) and the home detection position so that the encoder pulse cumulative value[pulse] will be 0 at that position after the position of home has been detected. *1)
It corresponds to the encoder multi-turn data or the higher 32 bits of the 64-bit (consisting of the higher 24-bit + lower 24-bit data) data of the external scale.
Do not manually change this parameter, which otherwise causes the position of home to change. *2)
This parameter is invalid in increment mode (Pr0.15=1).
In full-closed control, this parameter is valid only when the serial communication type is of absolute specification (Pr3.23=2).

Pr7.121	Absolute scale offset 2	Range	Unit	Default	Related control mode			
		-2147483648 to 2147483647	pulse/pulse (External scale, lower 32 bits)	0	P	S	T	F

When performing the homing in the absolute mode, the amplifier automatically sets up the difference (offset value) between the encoder 0 position (or external scale 0 position) and the home detection position so that the encoder pulse cumulative value[pulse] will be 0 at that position after the position of home has been detected. *1)
It corresponds to the encoder 1-rotation data or the lower 32 bits of the 64-bit (consisting of the higher 24-bit + lower 24-bit data) data of the external scale.
Do not manually change this parameter, which otherwise causes the position of home to change. *2)
This parameter is invalid in increment mode (Pr0.15=1).
In full-closed control, this parameter is valid only when the serial communication type is of absolute specification (Pr3.23=2).

All other parameters will be manufacturers use.Please do not change the default parameters.

Note
- A parameter is designated as follows: Class Pr0.00 Parameter No.
- For parameters which No. have a suffix of " * ", changed contents will be validated when you turn on the control power.

Related page
- P.3-34 "Inputs and outputs on connector X4"

1. Details of parameter

[Class 8] Special setting

Parameter is all manufacturers use.Please do not change the default parameters.

1. Details of parameter

[Class 9] Special setting

Parameter is all manufacturers use.Please do not change the default parameters.

1. Details of parameter

[Class 15] Special setting

Parameter is all manufacturers use.Please do not change the default parameters.

2.Trial Run (JOG run)

Inspection Before Trial Run

(1) Inspection on wiring
- Miswiring ? (Especially power input and motor output)
- Short or grounded ?
- Loose connection ?

(2) Confirmation of power supply and voltage
- Rated voltage ?

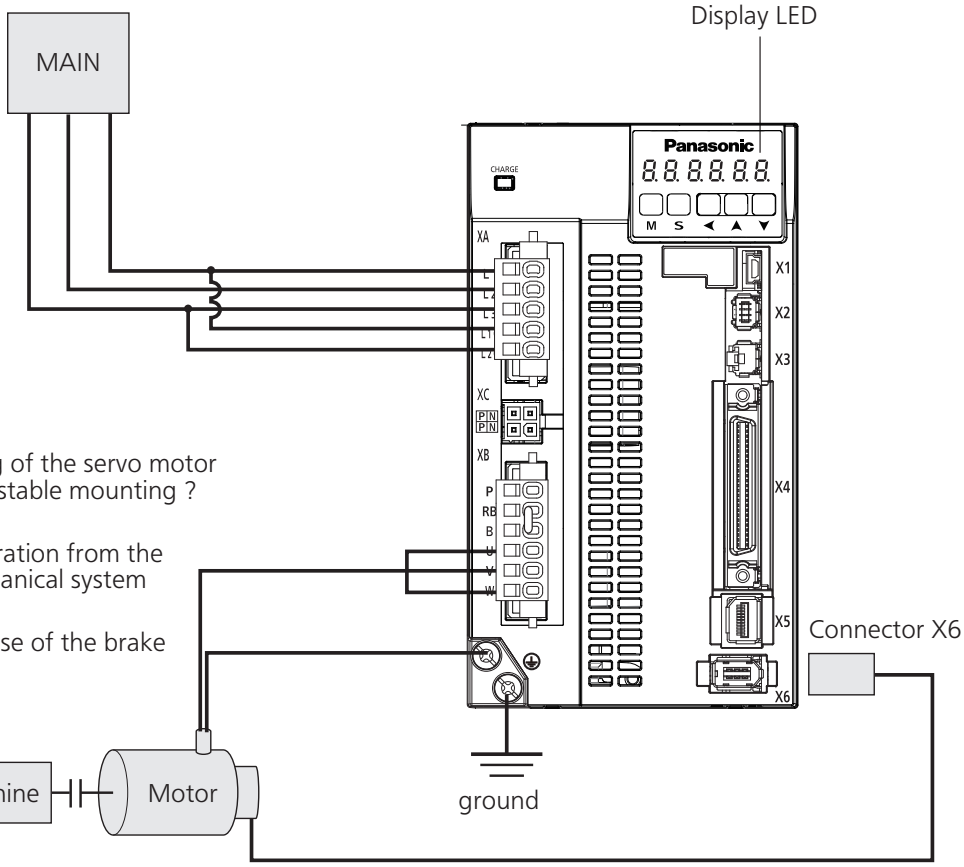

(3) Fixing of the servo motor
- Unstable mounting ?

(4) Separation from the mechanical system

(5) Release of the brake

(6) Turn to Servo-OFF after finishing the trial run by pressing **S**

Note
- Wiring details please refer to P.2-16 ～ "Overall Wiring/ Wiring of the Main Circuit/ Wiring Diagram".
- The drive in the diagram is a multi - functional.

Trial Run (JOG run) at Position Control Mode

1) Connect the Connector X4.
2) Enter the power (DC12 V to 24 V) to control signal (COM+, COM−)
3) Enter the power to the driver.
4) Confirm the default values of parameters.
5) Match to the output format of the host controller with Pr0.07 (Command pulse input mode setup).
6) Write to EEPROM and turn off/on the power (of the driver).
7) Connect the Servo-ON input (SRV-ON) and COM− (Connector X4, Pin-41) to bring the driver to Servo-ON status and energize the motor.
8) Enter low frequency from the host controller to run the motor at low speed.
9) Check the motor rotational speed at monitor mode whether,rotational speed is as per the setup or not, and the motor stops by stopping the command (pulse) or not.
10) If the motor does not run correctly, refer to P.2-124, "Display of Factor for No-Motor Running" of Preparation.

- Wiring Diagram

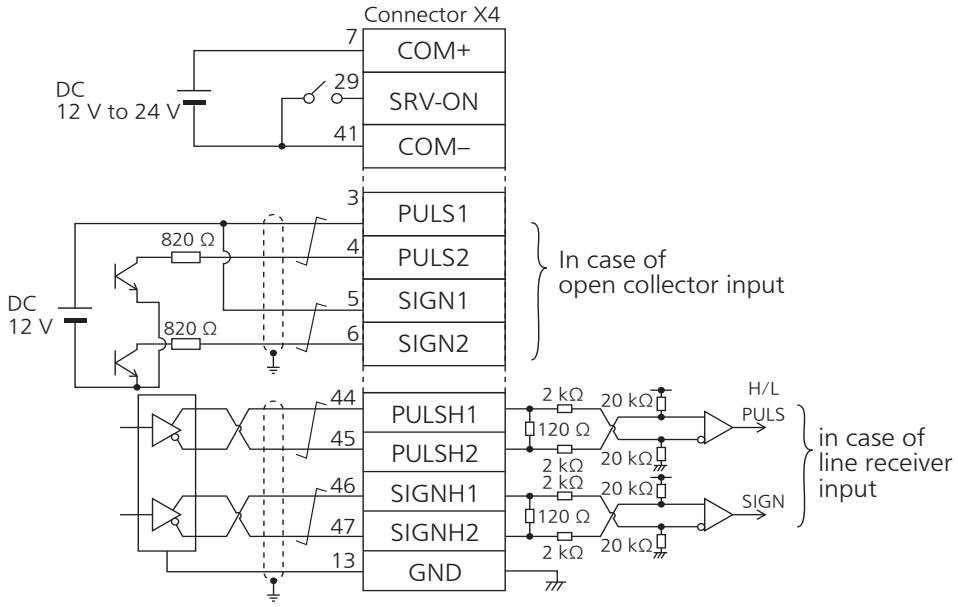

- Parameter

Pr No.	Title	Setup value
0.01	Control mode setup	0
5.04	Over-travel inhibit input setup	1
0.05	Selection of command pulse input	arbitrary value
0.07	Command pulse input mode setup	1
5.18	Invalidation of command pulse inhibit input	1
5.17	Counter clear input mode	2

- Input signal status

No.	Title of signal	Monitor display
0	Servo-ON	+A

Trial Run (JOG run) at Velocity Control Mode

1) Connect the Connector X4.
2) Enter the power (DC12 V to 24 V) to control signal (COM+, COM−)
3) Enter the power to the driver.
4) Confirm the default values of parameters.
5) Connect the Servo-ON input (SRV-ON, Connector X4, Pin-29) and COM− (Connector X4, Pin-14) to turn to Servo-ON and energize the motor.
6) Close the speed zero clamp input (ZEROSPD) and apply DC voltage between velocity command input , SPR (Connector X4, Pin-14) and GND (Connector X4, Pin-15), and gradually increase from 0 V to confirm the motor runs.
7) Confirm the motor rotational speed in monitor mode.
   - Whether the rotational speed is per the setup or not.
   - Whether the motor stops with zero command or not.
8) If the motor does rotate at a micro speed with command voltage of 0.
9) When you want to change the rotational speed and direction, set up the following parameters again.

   Pr3.00: Speed setup, Internal/External switching
   Pr3.01: Speed command rotational direction selection
   Pr3.03: Reversal of speed command input

   Refer to P.4-31, 32 "Parameter Setup" (Parameters for Velocity/Torque Control)
10) If the motor does not run correctly, refer to P.2-124, "Display of the Factor of No-Motor Running" of Preparation.

- Wiring Diagram

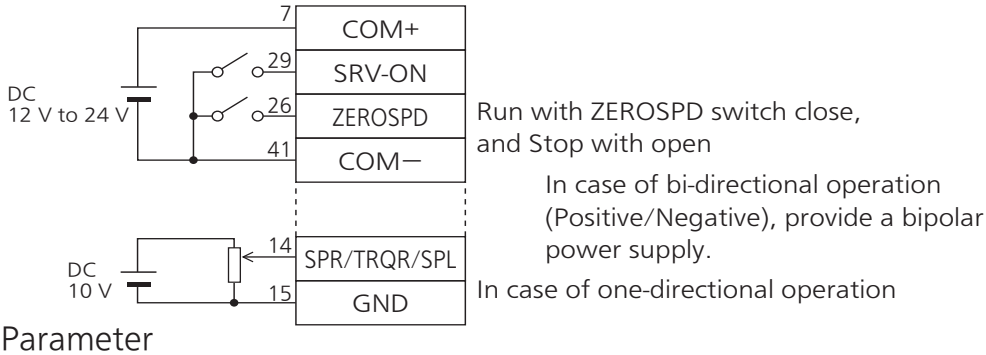

- Parameter

Pr No.	Title	Setup value
0.01	Control mode setup	1
5.04	Over-travel inhibit input setup	1
3.15	Speed zero-clamp function selection	1
3.00	Speed setup, Internal/External switching	Set up as required
3.01	Speed command rotational direction selection	
3.02	Input gain of speed command	
3.03	Reversal of speed command input	
4.22	Analog input 1 (AI1) offset setup	
4.23	Analog input 1 (AI1) filter	

- Input signal status

No.	Title of signal	Monitor display
0	Servo-ON	+A
5	Speed zero clamp	—

Trial Run (JOG run) at Torque Control Mode

1) Connect the Connector X4.
2) Enter the power (DC12 V to 24 V) to control signal (COM+, COM−)
3) Enter the power to the driver.
4) Confirm the default values of parameters.
5) Set a lower value to Pr3.07 (4th speed of speed setup).
6) Energize the motor by connecting the Servo-ON input (SRV-ON, Connector X4, Pin-29) and COM− (Pin-41 of Connector X4) to turn to Servo-ON status.
7) Confirm that the motor runs as per the setup of Pr3.07 by applying DC voltage (positive/negative) between the torque command input (Pin-14 of Connector X4) and GND (Pin-15 of Connector X4).
8) If you want to change the torque magnitude, direction and velocity limit value against the command voltage, set up the following parameters.
   Pr3.19: Input gain of torque command
   Pr3.20: Input reversal of torque command
   Pr3.21: Speed limit value 1
   Refer to P.4-35, 36, "Parameter Set-up" (Parameters for Velocity/Torque Control)
9) If the motor does not run correctly, refer to P.2-124, "Display of the Factor of No-Motor Running" of Preparation.

- Wiring Diagram

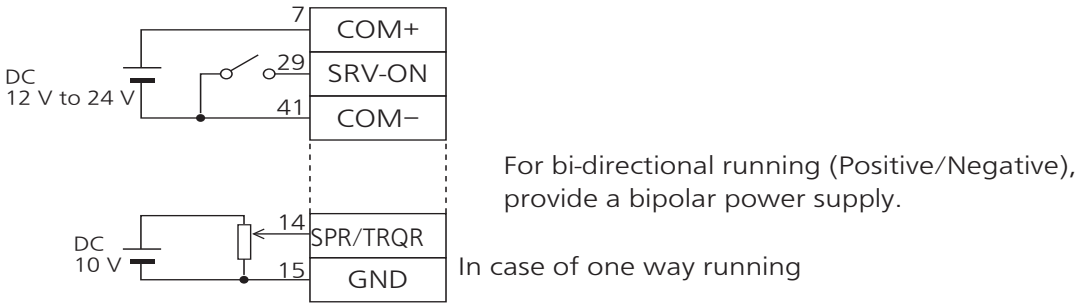

- Parameter

Pr No.	Title	Setup value
0.01	Control mode setup	2
5.04	Over-travel inhibit input setup	1
3.15	Speed zero-clamp function selection	0
3.17	Selection of torque command	0
3.19	Input gain of torque command	Set up as required
3.20	Input reversal of torque command	
3.21	Speed limit value 1	lower value

- Input signal status

No.	Title of signal	Monitor display
0	Servo-ON	+A
5	Speed zero clamp	—

2.Trial Run (JOG run)

Setup of Motor Rotational Speed and Input Pulse Frequency

Input pulse frequency (pps)	Motor rotational speed (r/min)	Pr0.08 23-bit
2 M	3000	$\frac{2^{23}}{40000}$
500 K	3000	$\frac{2^{23}}{10000}$
250 K	3000	$\frac{2^{23}}{5000}$
100 K	3000	$\frac{2^{23}}{2000}$
500 K	1500	$\frac{2^{23}}{20000}$

Note When setting Pr0.08, and encoder resolution is automatically set up as numerators. For full closed controlling, setting of Pr0.08 is ignored and settings of Pr0.09 and Pr0.10 are always applied.

Caution
- Max. input pulse frequency varies depending on input terminals.
- The desired setting can be determined by selecting value of numerator and denominator of electronic gear. However, an excessively high division or multiplication ratio cannot guarantee the operation. The ratio should be in a range between 1/1000 and 8000. Excessively high multiplication ratio will cause Err27.2 (command pulse multiplication error protection) due to varying command pulse input or noises, even if the other settings are within the specified range.

Relation between the motor rotational speed and input pulse counts

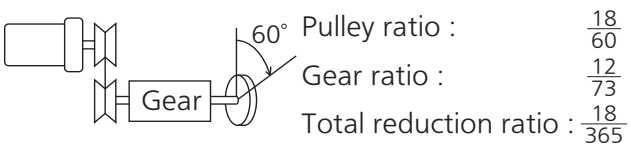

When setting the command division and multiplication ratio as numerator/denominator, express it as Pr0.09/Pr0.10 with Pr0.08 = 0. For full closed controlling, setting of Pr0.08 is ignored and settings of Pr0.09 and Pr0.10 are always applied.

e.g.) When you want to rotate the motor by 60° with the load of total reduction ratio of 18/365.

	Encoder 23-bit
$\frac{Pr0.09}{Pr0.10}$	$\frac{9568256}{3375}$
Command pulse	To rotate the output shaft by 60° , enter the command of 10000 pulses from the host controller.
How to determine parameter	$\frac{365}{18} \times \frac{1 \times 2^{23}}{10000} \times \frac{60^\circ}{360^\circ} = \frac{9568256}{3375}$

2^n	Decimal figures	2^n	Decimal figures
2^0	1	2^{12}	4096
2^1	2	2^{13}	8192
2^2	4	2^{14}	16384
2^3	8	2^{15}	32768
2^4	16	2^{16}	65536
2^5	32	2^{17}	131072
2^6	64	2^{18}	262144
2^7	128	2^{19}	524288
2^8	256	2^{20}	1048576
2^9	512	2^{21}	2097152
2^{10}	1024	2^{22}	4194304
2^{11}	2048	2^{23}	8388608

* Refer to P.2-108 “Setup of command division and multiplication ratio (electronic gear ratio)” of Supplement.

5. Adjustment

1. Gain Adjustment
Outline 5-2

2. Real-Time Auto-Gain Tuning
Basic 5-4
Two-degree-of-freedom control mode Position control type ... 5-11
Two-degree-of-freedom control mode Synchronous type 5-19

3. Adaptive filter
Adaptive filter 5-27

4. Manual Gain Tuning (Basic)
Outline 5-30
Adjustment in Position Control Mode 5-31
Adjustment in Velocity Control Mode 5-32
Adjustment in Torque Control Mode 5-32
Adjustment in Full-Closed Control Mode 5-33
Gain Switching Function 5-34
Suppression of Machine Resonance 5-37

5. Manual Gain Tuning (Application)
Damping Control 5-41
Model-type damping filter 5-44
Feed forward function 5-48
Load variation suppression function 5-51
3rd gain switching function 5-54
Friction torque compensation 5-56
Inertia ratio switching function 5-58
Hybrid vibration damping function 5-60
Quadrant projection suppression function 5-61
Two-degree-of-freedom control mode (Position control) 5-63
Two-degree-of-freedom control mode (Velocity control) 5-65
Two-degree-of-freedom control mode (full-close control) 5-66
Two-stage torque filter 5-68
High response current control 5-70

6. About Homing Operation
Caution on Homing Operation 5-71
Homing with Hit & Stop 5-72
Press & Hold Control 5-73

7. Applied functions
Position compare output function 5-74
Infinite rotation absolute function 5-79
Deterioration diagnosis warning functionl 5-80

1. Gain Adjustment

Outline

Purpose

It is required for the servo driver to run the motor in least time delay and as faithful as possible against the commands from the host controller. You can make a gain adjustment so that you can run the motor as closely as possible to the commands and obtain the optimum performance of the machine.

<e.g. : Ball screw>

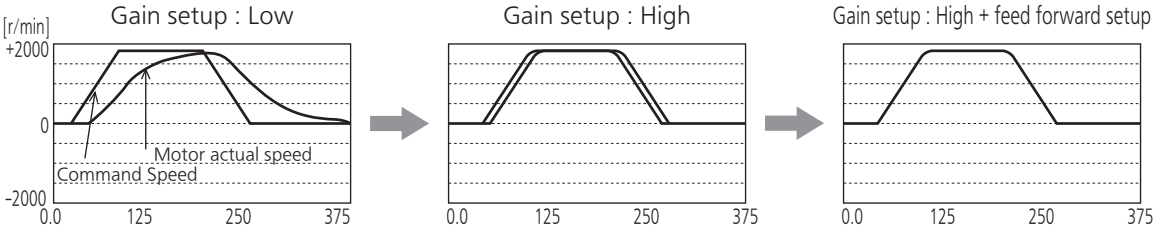

	Gain setup : Low	Gain setup : High	Gain setup : High + feed forward setup
Position loop gain	: 20	: 100	: 100
Velocity loop gain	: 100	: 50	: 50
Time constant of V-loop integration	: 50	: 50	: 50
Velocity loop feed forward	: 0	: 0	: 500
Inertia ratio	: 100	: 100	: 100

Procedures

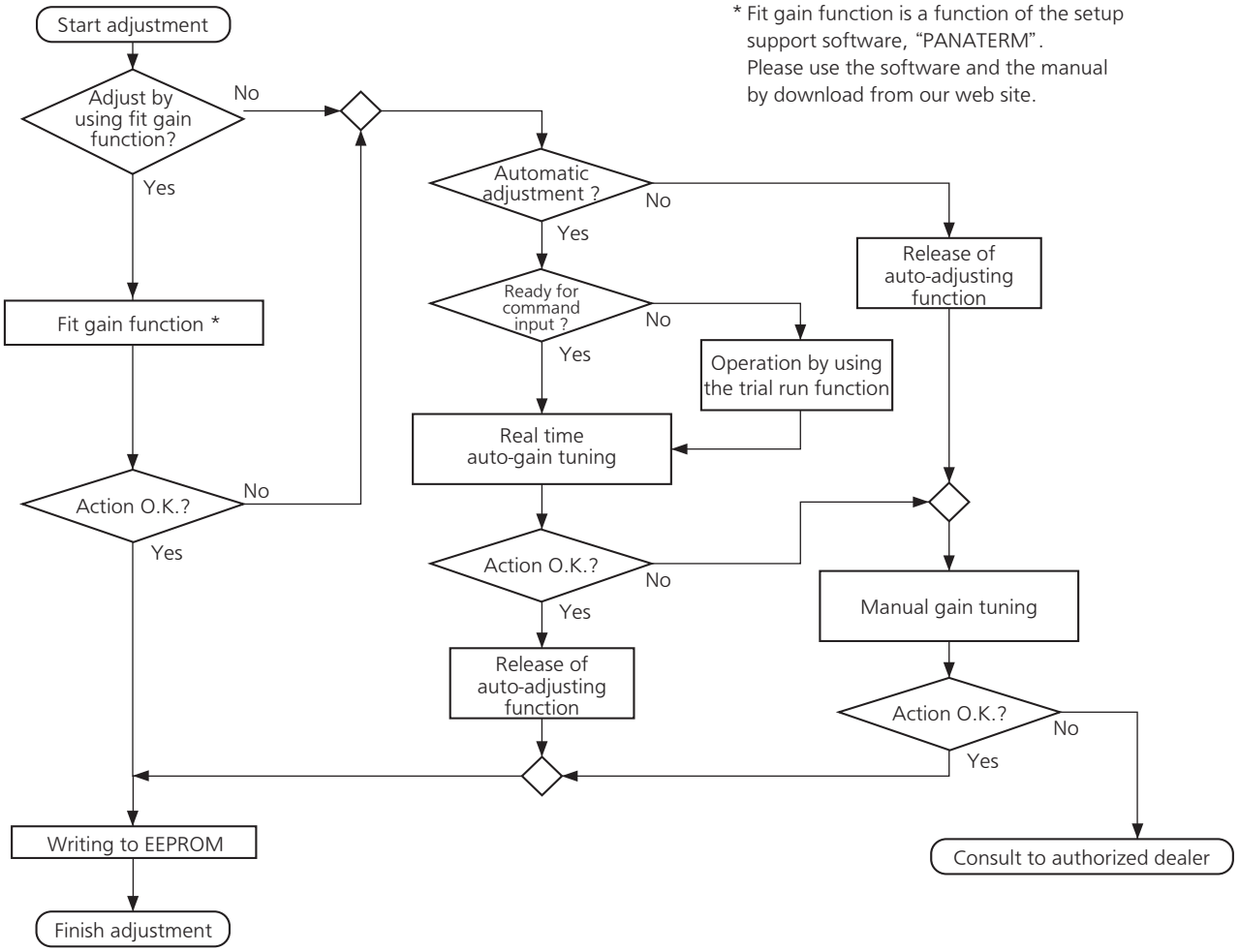

* Fit gain function is a function of the setup support software, "PANATERM". Please use the software and the manual by download from our web site.

Note For safety operation, first adjust the gain by referring to P.6-29 Setup of gain pre-adjustment protection.

Type

Function			Explanation	Pages to refer
Automatic adjustment	Real-time auto-gain tuning		Estimates the load inertia of the machine in real time, and automatically sets up the optimum gain corresponding to this result.	P.5-4
Automatic adjustment	Two-degree-of-freedom control mode		In the two-degree-of-freedom control mode, command response and servo rigidity can be independently set with improved responsiveness. This mode has enhanced position and speed control functions.	P.5-11
Automatic adjustment	Adaptive filter		Reduces the resonance vibration point by automatically setting up the notch filter coefficient which removes the resonance component from the torque command while estimating the resonance frequency from the vibrating component which appears in the motor speed in actual operating condition.	P.5-27
Manual adjustment	Manual gain tuning (basic)		Execute the manual adjustment or fine-tuning when real-time auto-gain tuning cannot be activated due to the limitation of operation or load condition, or when you want to obtain an optimum response and stability under these conditions.	P.5-30
Manual adjustment	Manual gain tuning (basic)	Basic procedure	Adjustment in position control mode	P.5-31
Manual adjustment	Manual gain tuning (basic)	Basic procedure	Adjustment in velocity control mode	P.5-32
Manual adjustment	Manual gain tuning (basic)	Basic procedure	Adjustment in torque control mode	P.5-32
Manual adjustment	Manual gain tuning (basic)	Basic procedure	Adjustment in full-closed control mode	P.5-33
Manual adjustment	Manual gain tuning (basic)	Gain switching function	You can expect to reduce vibration at stopping and settling time and to improve command compliance by switching the gains by internal data or external signals.	P.5-34
Manual adjustment	Manual gain tuning (basic)	Suppression of machine resonance	When the machine stiffness is low, vibration or noise may be generated due to the distorted axis, hence you cannot set the higher gain. You can suppress the resonance with two kinds of filter.	P.5-37
Manual adjustment	Manual gain tuning (application)		You can obtain the higher performance while you are not satisfied with the performance obtained with the basic adjustment, using the following application functions.	P.5-41
Manual adjustment	Manual gain tuning (application)	Damping control	Damping control	P.5-41
Manual adjustment	Manual gain tuning (application)	Damping control	Model-type damping filter	P.5-44
Manual adjustment	Manual gain tuning (application)	Feed forward function	Velocity feed forward function improves responsiveness during position control and full closed control. Torque feed forward improves the response of velocity control system.	P.5-48
Manual adjustment	Manual gain tuning (application)	Load variation suppression function	Function which obtains both reducing motor speed variation and improving stability by changing estimated disturbance torque and load fluctuation.	P.5-51
Manual adjustment	Manual gain tuning (application)	3rd gain switching function	By using this function in addition to the normal gain switching function, the gain can be changed at the moment of stop to further shorten the positioning time.	P.5-54
Manual adjustment	Manual gain tuning (application)	Friction torque compensation	Offset load compensation and dynamic friction compensation are used to reduce effects of mechanical friction.	P.5-56
Manual adjustment	Manual gain tuning (application)	Inertia ratio switching function	This function can be used when selectable 2 inertia ratios are provided.	P.5-58
Manual adjustment	Manual gain tuning (application)	Hybrid vibration damping function	This function, when used in full closed control mode, prevents vibration resulting from torsion on motor and load.	P.5-60
Manual adjustment	Manual gain tuning (application)	Qudrant projecttion suppression function	Control configuration can be switched to suppress quadrant projection occurring during arc interpolation of 2 or more axes.	P.5-61
Manual adjustment	Manual gain tuning (application)	Two-degree-of-freedom control mode	In the two-degree-of-freedom control mode, command response and servo rigidity can be independently set with improved responsiveness. This mode has enhanced position and speed control functions.	P.5-63
Manual adjustment	Manual gain tuning (application)	Two-stage torque filter	In addition to 1st and 2nd torque filters (Pr1.04 and Pr1.09), another torque filter can be set.	P.5-68
Manual adjustment	Manual gain tuning (application)	High response current control	High response current control is to improve the responsive function of the current control part by setting Pr6.11 (current response setting) to a value greater than default setting of 100%.	P.5-70

Remarks
- Pay extra attention to safety, when oscillation (abnormal noise and vibration) occurs, shut off the main power, or turn to Servo-OFF.

2. Real-Time Auto-Gain Tuning

Basic

Outline

The system estimates the load characteristics in real time, and automatically performs basic gain setting and friction compensation by referring to stiffness parameter.

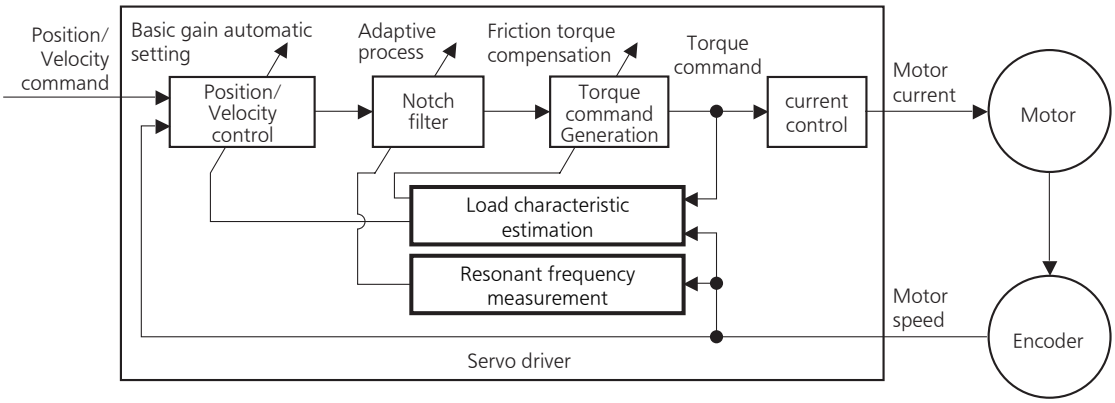

Applicable Range

Real time auto-gain tuning is applicable to all control modes.

	Real-time auto-tuning condition
Control Mode	Specific real-time auto-tuning mode is selected according to the currently active control mode. For details, refer to the description of Pr0.02 Real-time auto-tuning setup.
Others	• Should be in servo-on condition • Input signals such as the deviation counter clear and command input inhibit, and parameters except for controls such as torque limit setup, are correctly set, assuring that the motor can run smoothly.

Caution

- From power on to the load characteristics tuning valid action data are fully collected, the tuning speed of the tuning value may be faster than setup value of Pr6.31(real-time auto tuning speed).
- When the real-time auto tuning function is valid, the influence of external interference and other factors may lead to the tuning value error. Therefore, it is suggested that the real-time auto tuning should be set to invalid if the stable operation after power on can not be guaranteed.
  Real-time auto-gain tuning may not be executed properly under the conditions described in the table below. Under these conditions, change the load condition or operation pattern, or start manual gain tuning (refer to P.5-30).

	Conditions which obstruct real-time auto-gain tuning action
Load inertia	• The load is too small or large compared to the rotor inertia. (less than 3 times or more than 20 times). • The load inertia changes too quickly.
Load	• The machine stiffness is extremely low. • Nonlinear characteristics such as backlash exist.
Action pattern	• The motor is running continuously at low speed of (100 [r/min] or lower. • Acceleration/deceleration is slow (2000 [r/min] per 1[s] or low). • Acceleration/deceleration torque is smaller than unbalanced weighted/ viscous friction torque. • When the speed condition of 100 [r/min] or more and acceleration/ deceleration condition of 2000 [r/min] per 1 [s] are not maintained for 50 [ms].

How to Operate

1) Bring the motor to stall (Servo-OFF).
2) Set up Pr0.02 (Setup of real-time auto-gain tuning mode) to 1-6.
   Default is set to 1.

Setup value	Real-time auto-gain tuning
0	Invalid
1	Standard
2	Positioning *1
3	Vertical axis *2
4	Friction compensation *3
5	Load characteristic measurement
6	Customize *4

*1 Velocity and torque controls are the same as in the standard mode.
*2 Torque control is the same as in the standard mode.
*3 Velocity control is the same as in the vertical axis mode. Torque control is the same as in the standard mode.
*4 Certain function(s) is not available in a specific control mode. Refer to description in Pr6.32.

Control parameter is automatically set according to Pr0.03 Real-time auto-tuning stiffness setup. For details, refer to P.5-6 ~ 5-8.

3) Turn on servo, and start the machine.

Estimation of load characteristics starts.

4) When the load characteristics are determined, Pr0.04 Inertia ratio is updated.
   In a specific mode, the following parameters are changed:
   Pr6.07 Torque command additional value
   Pr6.08 Positive direction torque compensation value
   Pr6.09 Negative direction torque compensation value
   Load characteristics estimation speed can be set by Pr6.31 Real time auto tuning estimation speed.
5) When value of Pr0.03 Real-time auto-tuning stiffness setup is increased, the motor responsiveness will be improved.
   Determine the most appropriate stiffness in relation to the positioning setup time and vibration condition.
6) To save the result to memory, write the data to EEPROM.

Caution If power is turned off within 30 minutes after the end of tuning process, the result of the real-time auto-tuning is not saved. If the result is not saved, manually write parameters to EEPROM and then turn off power.

Note
- While the auto-tuning is valid, parameters that are to be automatically adjusted cannot be changed.

Related page
- P.2-132 "EEPROM Writing Mode"
- P.4-7 to P.4-87... "Details of parameter"

Parameters set/changed by real-time auto-gain tuning

- Parameters which are updated

The real-time auto-tuning function updates the following parameters according to Pr0.02 Real-time auto-tuning setup and Pr6.32 Real-time auto-tuning custom setup and by using the load characteristic estimate values.

Class	No.	Title	Function
0	04	Inertia ratio	Updates this parameter when the real-time auto-tuning inertia ratio update is enabled.
6	07	Torque command additional value	Update this parameter when the vertical axis mode for real time auto-tuning is valid.
6	08	Positive direction torque compensation value	Update this parameter when the friction compensation mode for real time auto-tuning is valid.
6	09	Negative direction torque compensation value	Update this parameter when the friction compensation mode for real time auto-tuning is valid.

- Parameters which are updated to setup value corresponding to stiffness setup

The real-time auto-tuning function updates the following basic gain setup parameters according to Pr0.03 Real-time auto-tuning stiffness setup.

Class	No.	Title	Function
1	00	1st gain of position loop	When stiffness setup is valid, updates the parameter based on the setup value. Refer to P.5-10 Basic gain parameter setup table.
1	01	1st gain of velocity loop	
1	02	1st time constant of velocity loop integration	
1	04	1st time constant of torque filter	
1	05	2nd gain of position loop	
1	06	2nd gain of velocity loop	
1	07	2nd time constant of velocity loop integration	
1	09	2nd time constant of torque filter	

- Parameters which are set to fixed value

Real-time auto-tuning function sets the following parameters to the fixed value.

Class	No.	Title	Setup value when fixed parameter setup is valid.
1	03	1st filter of speed detection	0
1	08	2nd filter of speed detection	
1	10	Velocity feed forward gain	300 (30 %)
1	11	Velocity feed forward filter	50 (0.5 ms)
1	12	Torque feed forward gain	0
1	13	Torque feed forward filter	

Related page • P.4-7 to P.4-87 “Details of parameter”

- Parameters which are set in response to gain switching setup

The real-time auto-tuning function sets the following parameters as the gain is switched.

Class	No.	Title	Function
1	14	2nd gain setup	Sets to 1 if the current setting is not maintained.
1	15	Mode of position control switching	Sets to 10 to enable the gain switching. Sets to 0 to disable the gain switching.
1	16	Delay time of position control switching	Sets to 50 if the current setting is not maintained.
1	17	Level of position control switching	
1	18	Hysteresis at position control switching	Sets to 33 if the current setting is not maintained.
1	19	Position gain switching time	
1	20	Mode of velocity control switching	Sets to 0 if the current setting is not maintained.
1	21	Delay time of velocity control switching	
1	22	Level of velocity control switching	
1	23	Hysteresis at velocity control switching	
1	24	Mode of torque control switching	
1	25	Delay time of torque control switching	
1	26	Level of torque control switching	
1	27	Hysteresis at torque control switching	

- Parameters which are always set to invalid.

The following settings are always set to invalid when Pr0.02 Real-time auto-tuning setup is not 0.

Class	No.	Title	Function
6	10	Function expansion setup	The bit(bit3)for inertia ratio switching function permission is internally invalidated.
6	13	2nd Inertia ratio	Parameter settings can be changed,but the inertia ratio switching function is invalidated.

The following settings are parameters are set automatic for enable/disable of Pr6.10 Function expansion setting load variation suppression function automatic adjustment.

Class	No.	Title	Function
6	10	Function expansion setup	When set to Pr6.10 bit14=1in case of stiffness setting is enabled.load fluctuation suppression funtion will become enabled(bit1=1). When set to Pr6.10 bit14=0,it is disabled(bit1=1).
6	23	Load fluctuation compensation gain	When set to Pr6.10 bit4=1 in case of stiffness setting is enabled,sets to 90%. When set to Pr6.10 bit14=0,set to 0%.

Related page • P.4-7 to P.4-87 “Details of parameter”

Class	No.	Title	Function
6	24	Load fluctuation compensating filter	When set to Pr6.10 bit14=1 in case of stiffness setting is enabled.updates to match rigidity. When set to Pr6.10 bit14=0,value is held.
6	73	load estimation filter	When set to Pr6.10 bit14=1 in case of stiffness setting is enabled.ses to 0.13 ms.When set to Pr6.10 bit14=0,set to 0 ms.
6	74	Torque compensating frequency 1	Regardless value of the Pr6.10 bit14,sets to 0.
6	75	Torque compensating frequency 2	Regardless value of the Pr6.10 bit14,sets to 0.
6	76	Load estimate numbers	When set to Pr6.10 bit14=1 in case of stiffness setting is enabled,sets to 4. When set to Pr6.10 bit14=0,set to 0.

Caution

(1) Immediately after the first servo-on upon start up; or after increasing Pr0.03 Real-time auto-tuning stiffness setup, abnormal sound or oscillation may be generated until the load characteristics estimation is stabilized. If such abnormality lasts or repeats for 3 or more reciprocating operations, take the following countermeasures.
  1) Lower the setup of Pr0.03 (Selection of machine stiffness at real-time auto-gain tuning).
  2) Set Pr0.02 Real-time auto-tuning setup to 0 to disable the real-time auto-tuning.
  3) Set Pr0.04 Inertial ratio to the calculational value of the equipment and set Pr6.07 Torque command addition value, Pr6.08 Positive direction compensation value and Pr6.09 Negative direction compensation value to 0.
  4) Disabale load variation suppression function. (bit1=0 after Pr 6.10 bit14=0)

(2) When abnormal noise and oscillation occur, Pr0.04 (Inertia ratio) or Pr6.07 (Torque command additional value), Pr6.08(Positive direction torque compensation value), Pr6.09(Negative direction torque compensation value) might have changed to extreme values. Take the same measures as the above in these cases.

(3) Among the results of real-time auto-gain tuning, Pr0.04 (Inertia ratio) and Pr6.07 (Torque command additional value), Pr6.08(Positive direction torque compensation value), Pr6.09(Negative direction torque compensation value) will be written to EEPROM every 30 minutes. When you turn on the power again, the auto-gain tuning will be executed using the latest data as initial values.

(4) Because the control gain is updated while the motor stops, changed setting value of Pr0.03 “Real-time auto-tuning stiffness setup” may not be reflected if the motor cannot stop due to excessively low gain or application of a command that directs the motor to turn in the same direction continuously. If the changed stiffness setting value is reflected after motor stops, it may generate abnormal sound or oscillate.
After changing stiffness, stop the motor and check to see that the new stiffness setting is made effective.

Related page • P.4-7 to P.4-87 “Details of parameter”

Invalidation of Real-Time Auto-Gain Tuning

You can stop the automatic calculation of Pr0.04 (Inertial ratio) and invalidate the real-time auto-gain tuning by setting up Pr0.02 (Real-time auto-gain tuning setup) to 0.
Since the estimation result of Pr0.04 “Inertia ratio” remains, and if this parameter becomes clearly abnormal value, manually set to the appropriate value which is obtained from suitable formula or calculation.

Caution If power is turned off within 30 minutes after the end of tuning process, the result of the real-time auto-tuning is not saved. If the result is not saved, manually write parameters to EEPROM and then turn off power.

Basic gain parameter setup table

Stiffness	1st gain				2nd gain				load variation suppression function
	Pr1.00	Pr1.01	Pr1.02	Pr1.04	Pr1.05	Pr1.06	Pr1.07 *2	Pr1.09	Pr6.24
	Gain of position loop [0.1 /s]	Gain of velocity loop [0.1 Hz]	Time constant of velocity loop integration [0.1 ms]	Time constant of torque filter [0.01 ms]	Gain of position loop [0.1 /s]	Gain of velocity loop [0.1 Hz]	Time constant of velocity loop integration [0.1 ms]	Time constant of torque filter [0.01 ms]	Load fiuctuation compensation filter [0.01 ms]
0	20	15	3700	1500	25	15	10000	1500	2500
1	25	20	2800	1100	30	20	10000	1100	2500
2	30	25	2200	900	40	25	10000	900	2500
3	40	30	1900	800	45	30	10000	800	2500
4	45	35	1600	600	55	35	10000	600	2500
5	55	45	1200	500	70	45	10000	500	2500
6	75	60	900	400	95	60	10000	400	2500
7	95	75	700	300	120	75	10000	300	2120
8	115	90	600	300	140	90	10000	300	1770
9	140	110	500	200	175	110	10000	200	1450
10	175	140	400	200	220	140	10000	200	1140
11 *1	320	180	310	126	380	180	10000	126	880
12	390	220	250	103	460	220	10000	103	720
13 *1	480	270	210	84	570	270	10000	84	590
14	630	350	160	65	730	350	10000	65	450
15	720	400	140	57	840	400	10000	57	400
16	900	500	120	45	1050	500	10000	45	320
17	1080	600	110	38	1260	600	10000	38	270
18	1350	750	90	30	1570	750	10000	30	210
19	1620	900	80	25	1880	900	10000	25	180
20	2060	1150	70	20	2410	1150	10000	20	140
21	2510	1400	60	16	2930	1400	10000	16	110
22	3050	1700	50	13	3560	1700	10000	13	90
23	3770	2100	40	11	4400	2100	10000	11	80
24	4490	2500	40	9	5240	2500	10000	9	60
25	5000	2800	35	8	5900	2800	10000	8	60
26	5600	3100	30	7	6500	3100	10000	7	50
27	6100	3400	30	7	7100	3400	10000	7	50
28	6600	3700	25	6	7700	3700	10000	6	40
29	7200	4000	25	6	8400	4000	10000	6	40
30	8100	4500	20	5	9400	4500	10000	5	40
31	9000	5000	20	5	10500	5000	10000	5	40

*1 Default stiffness setting: 13 for frames A, B and C, 11 for frames D, E, F, G, H.
*2 In the vertical axis mode or friction compensation mode (Pr0.02 = 3, 4), Pr1.07 keeps 9999 (hold) until load characteristics estimation completes.

Note

• P.4-7 to P.4-87 “Details of parameter”

2. Real-Time Auto-Gain Tuning

Two-degree-of-freedom control mode – Position control type

Outline

In this auto-tuning mode, two-degree-of-freedom control is available in addition to real-time auto tuning basic function.
The position control type is a mode that is suitable for positioning, and the 3rd gain switching and viscous friction compensation are enabled.
The two-degree-of-freedom control mode, position control type, can be used by setting Pr6.47 Function expansion setup 2 to bit 0 = 1 and bit 3 = 0.

Applicable Range

	Real-time auto-tuning condition
Control Mode	Real-time auto-tuning, two-degree-of-freedom control mode, position control type, can be applied for position control and speed control.
Others	• Should be in servo-on condition. • Input signals, such as deviation counter clear and command input inhibit, and parameters, except for controls such as torque limit setup, are correctly set, assuming that the motor can run smoothly.

Caution

- From power on to the load characteristics tuning valid action data are fully collected, the tuning speed of the tuning value may be faster than setup value of Pr6.31(real-time auto tuning speed).
- When the real-time auto tuning function is valid, the influence of external interference and other factors may lead to the tuning value error. Therefore, it is suggested that the real-time auto tuning should be set to invalid if the stable operation after power on can not be guaranteed.

Real-time auto-gain tuning may not be executed properly under the conditions described below.
Under these conditions, change the load conditions or operation patterns, or start manual gain tuning (refer to P.5-31 and subsequent).

	Conditions which obstruct real-time auto-gain tuning
Load inertia	• Load is small or large compared with the rotor inertia (less than 3 times or more than 20 times). • The load inertia changes.
Load	• The machine stiffness is extremely low. • Nonlinear characteristics such as backlash exist.
Action pattern	• The motor is running continuously at low speed of 100 [r/min] or lower. • Acceleration/deceleration is slow (2000 [r/min/1[s] or low). • Acceleration/deceleration torque is smaller than unbalanced weighted/viscous torque. • When speed condition of 100 [r/min] or more and acceleration/deceleration condition of 2000 [r/min]/1[s] are not maintained for 50 [ms].

How to Operate

1) Bring the motor to stall (Servo-off).
2) Set up Pr0.02 (Setup of real-time auto-gain tuning mode) to other than 0, 6.

Setup value	Real-time auto-gain tuning	Explanation
0	Invalid	Real-time auto-gain tuning function is disabled.
1	Standard response mode	Stability-first mode. Do not use unbalanced load compensation, friction compensation or gain switching.
2	Quick response mode 1	Positioning-first mode. Use this mode for equipment with horizontal axis, low friction ball screw driving and without unbalanced load.
3	Quick response mode 2	In addition to the features provided with the Quick response mode 1, use this mode to compensate unbalanced load, to apply third gain to reduce variation in positioning settling time.
4	Quick response mode 3 *1	In addition to the features provided with the Quick response mode 2, use this mode to shorten positioning settling time when the load has high friction.
5	Load characteristic measurement	Estimate load characteristics without changing basic gain setting or friction compensation setting with the help of the setup support software.
6	Fit gain mode	To be used for fine adjustment of rigidity setting after completion of fit gain.

Control parameter is automatically set according to Pr0.03 Real-time auto-tuning stiffness setup.

[Example of real-time auto-tuning setup]

1) When performing adjustment focusing on settling time by using PTP control.
   It is recommended to use quick response mode (Pr0.02 = 2-4). When friction has large effect, use quick response mode 3 (Pr0.02 = 4).
   The 3rd gain of quick response mode 2 and 3 (Pr0.02 = 3-4) should be doubled for a short time to damp vibration during settling.
   If Pr0.03 (stiffness setting) is too high, it may cause oscillation during settling time. Observe the settled waveform.
2) When locus accuracy is necessary in CP control of machine e.g. processing machine, use the standard mode (Pr0.02 = 1) or quick response mode 1 (Pr0.02 = 2) if higher accuracy is required.
   When 2 or more axes must be synchronized together, coordinate the stiffness setting (Pr0.03) so that Pr2.22 (command smoothing filter) of all axes have the same value.

Note
- While the auto-tuning is valid, parameters that are to be automatically adjusted cannot be changed.

Related page
- P.2-132 “EEPROM Writing Mode”
- P.4-7 to P.4-87... “Details of parameter”

*1 Velocity control is the same as in the quick response mode 2. Value of parameters, Pr6.08 Forward torque compensation value, Pr6.09 Backward torque compensation value and Pr6.50 Viscous friction compensation gain will be updated but not reflected on operation.

3) When the servo is tuned on, input the action command.

4) As the load characteristics are correctly estimated, Pr0.04 Inertia ratio will be updated. In a specific mode, the following parameters are changed.
   Pr6.07 Torque command additional value
   Pr6.08 Positive direction torque compensation value
   Pr6.09 Negative direction torque compensation value
   Pr6.50 Viscous friction compensation gain
   Load characteristics estimation speed can be set by Pr6.31 Real time auto tuning estimation speed.

5) When value of Pr0.03 Real-time auto-tuning stiffness setup is increased, the motor responsiveness will be improved.
   Determine the most appropriate stiffness in relation to the positioning setup time and vibration condition.

6) To save the result to memory, write the date to EEPROM.

Caution If power is turned off within 30 minutes after the end of tuning process, the result of the real-time auto-tuning is not saved. If the result is not saved, manually write parameters to EEPROM and then turn off power.

Note
- While the auto-tuning is valid, parameters that are to be automatically adjusted cannot be changed.

Related page
- P.2-132 "EEPROM Writing Mode"
- P.4-7 to P.4-87... "Details of parameter"

Parameters set/changed by real-time auto-gain tuning

- Parameters which are updated

The real-time auto-tuning function updates the following parameters according to Pr0.02 Real-time auto-tuning setup by using the load characteristic estimate values.

Class	No.	Title	Function
0	04	Inertia ratio	Updates this parameter when the real-time auto-tuning is enabled (Pr0.02 = 1 to 4).
6	07	Torque command additional value	Updates this parameter when the real-time auto-tuning is in the quick response mode 2, 3 (Pr0.02 = 3, 4).
6	08	Positive direction torque compensation value	Updates this parameter when the real-time auto-tuning is in the quick response mode 3 (Pr0.02 = 4).
6	09	Negative direction torque compensation value	
6	50	Viscous friction compensation gain	

- Parameters which are updated to setup value corresponding to stiffness setup

The real-time auto-tuning function updates the following basic gain setup parameters according to Pr0.03 Real-time auto-tuning stiffness setup.

Class	No.	Title	Function
1	00	1st gain of position loop	When real-time auto-tuning is valid (Pr0.02 = 1 to 4), updates the setup value according to the stiffness. Refer to P.5-10 Basic gain parameter setup table.
1	01	1st gain of velocity loop	
1	02	1st time constant of velocity loop integration	
1	04	1st time constant of torque filter	
1	05	2nd gain of position loop	
1	06	2nd gain of velocity loop	
1	07	2nd time constant of velocity loop integration	
1	09	2nd time constant of torque filter	
2	22	Command smoothing filter	When real-time auto-tuning is valid (Pr0.02 = 1 to 4), updates the setup value according to the stiffness. * For velocity control, primary filter is fixed.
6	48	Adjust filter	

- Parameters which are set to fixed value

Real-time auto-tuning function sets the following parameters to fixed value.

Class	No.	Title	Setup value
1	03	1st filter of speed detection	0
1	08	2nd filter of speed detection	
1	10	Velocity feed forward gain	1000 (100 %)
1	11	Velocity feed forward filter	0
1	12	Torque feed forward gain	1000 (100 %)
1	13	Torque feed forward filter	0
6	10	Function expansion setup 2	bit4=1
6	49	Adjust/Torque command attenuation term	15

Related page • P.4-7 to P.4-87 “Details of parameter”

- Parameters which are set in respons to gain switching setup

The real-time auto-tuning function sets the following parameters as the gain is switched.

Class	No.	Title	Function
1	14	2nd gain setup	Sets to 1 if real-time auto-tuning is valid (Pr0.02 = 1 to 4).
1	15	Mode of position control switching	Sets to 0 when in standard response mode (Pr0.02 = 1); or to 7 when in quick response mode 1 to 3 (Pr0.02 = 2 to 4).
1	16	Delay time of position control switching	Sets to 10 if real-time auto-tuning is valid (Pr0.02 = 1 to 4).
1	17	Level of position control switching	Sets to 0 if real-time auto-tuning is valid (Pr0.02 = 1 to 4).
1	18	Hysteresis at position control switching	
1	19	Position gain switching time	Sets to 10 if real-time auto-tuning is valid (Pr0.02 = 1 to 4).
1	20	Mode of velocity control switching	Sets to 0 if real-time auto-tuning is valid (Pr0.02 = 1 to 4).
1	21	Delay time of velocity control switching	
1	22	Level of velocity control switching	Sets to 10 if real-time auto-tuning is valid (Pr0.02 = 1 to 4).
1	23	Hysteresis at velocity control switching	Sets to 0 if real-time auto-tuning is valid (Pr0.02 = 1 to 4).
1	24	Mode of torque control switching	
1	25	Delay time of torque control switching	Sets to 10 if real-time auto-tuning is valid (Pr0.02 = 1 to 4).
1	26	Level of torque control switching	Sets to 0 if real-time auto-tuning is valid (Pr0.02 = 1 to 4).
1	27	Hysteresis at torque control switching	
6	05	Position 3rd gain valid time	Sets to 0 (invalid) when in standard response mode or high speed response mode 1 (Pr0.02 = 1, 2). When in high speed response mode 2 or 3 (Pr0.02 = 3, 4), sets to Pr2.22 × 20 (max. value is limited to 10000).
6	06	Position 3rd gain scale factor	When in standard mode or high speed response mode 1, (Pr0.02 = 1, 2), sets to 100 (100 %). When in high speed response mode 2 or 3, (Pr0.02 = 3, 4), sets to 200 (200 %).

- Parameters which are always set to invalid

The following settings are always set to invalid when Pr0.02 Real-time auto-tuning setup is not 0.

Class	No.	Title	Function
6	10	Function expansion setup	Instantaneous speed observer function enable bit (bit 0), disturbance observer function enable bit (bit 1) and inertia ratio switching function enable bit (bit 3) are internally disabled.
6	13	2nd Inertia ratio	Parameter setup can be changed, but inertia ration switching function is disabled.

Related page • P.4-7 to P.4-87 “Details of parameter”

The following settings and parameters are set automatic for enable/disable state of Pr 6.10 “Function expansion setting” load variation suppression function automatic adjustment.

Class	No.	Title	Function
6	10	Function extension setting	When set to Pr 6.10 bit14=1 in case of stiffness setting is enabled, load variation suppression function will become enabled (bit1 = 1). When set to Pr 6.10 bit14=0,it is disabled(bit1 = 1).
6	23	Load variation compensation gain	When set to Pr 6.10 bit14=1 in case of stiffness setting is enabled, sets to 90%. When set to Pr 6.10 bit14=0, set to 0%. When set to Pr 6.10 bit14=1 in case of stiffness setting is enabled, sets to 90%. When set to Pr 6.10 bit14=0, set to 0%.
6	24	Load variation compensation filter	When set to Pr 6.10 bit14=1 in case of stiffness setting is enabled, updates to match rigidity. When set to Pr 6.10 bit14=0, value is held.
6	73	Load estimation filter	When set to Pr 6.10 bit14=1 in case of stiffness setting is enabled, sets to 0.13 ms. When set to Pr 6.10 bit14=0, set to 0 ms.
6	74	Torque compensation frequency 1	Regardless value of the Pr 6.10 bit 14, sets to 0.
6	75	Torque compensation frequency 2	Regardless value of the Pr 6.10 bit 14, sets to 0.
6	76	Load estimation numbers	When set to Pr 6.10 bit14=1 in case of stiffness setting is enabled, sets to 4. When set to Pr 6.10 bit14=0, set to 0.

Related page • P.4-7 to P.4-879 “Details of parameter”

Caution

(1) Immediately after the first servo-on upon start up; or after increasing Pr0.03 Real-time auto-tuning stiffness setup, abnormal sound or oscillation may be generated until the load characteristics estimation is stabilized. If such abnormality lasts or repeats for 3 or more reciprocating operations, take the following countermeasures.
1) Lower the setup of Pr0.03 (Selection of machine stiffness at real-time auto-gain tuning).
2) Set Pr0.02 Real-time auto-tuning setup to 0 to disable the real-time auto-tuning.
3) Set Pr0.04 Inertial ratio to the calculational value of the equipment and set Pr6.07
(Torque command addition value), Pr6.08 (Positive direction compensation value), Pr6.09 (Negative direction compensation value) and Pr6.50 (Viscous friction compensation gain) to 0.
4) Disabale load variation suppression function. (bit1=0 after Pr 6.10 bit14=0)

(2) When abnormal noise and oscillation occur, Pr0.04 (Inertia ratio) or Pr6.07 (Torque command additional value), Pr6.08 (Positive direction torque compensation value), Pr6.09 (Negative direction compensation value), Pr6.50 (Viscous friction compensation gain) might have changed extreme value.Take the same measures as the above in these cases.

(3) Among the results of real-time auto-gain tuning, Pr0.04 (Inertia ratio) and Pr6.07 (Torque command additional value), Pr6.08 (Positive direction torque compensation value), Pr6.09 (Negative direction compensation value), Pr6.50 (Viscous friction compensation gain) will be written to EE-PROM every 30 minutes. When you turn on the power again,the auto-gain tuning will be executed using the latest data as initial values.

(4) Because the control gain is updated while the motor stops, changed setting value of Pr0.03 “Real-time auto-tuning stiffness setup” may not be reflected if the motor cannot stop due to excessively low gain or application of a command that directs the motor to turn in the same direction continuously. If the changed stiffness setting value is reflected after motor stops, it may generate abnormal sound or oscillate.
After changing stiffness, stop the motor and check to see that the new stiffness setting is made effective.

Invalidation of Real-Time Auto-Gain Tuning

You can stop the automatic calculation of Pr0.04 (Inertial ratio) and invalidate the real-time auto-gain tuning by setting up Pr0.02 (Real-time auto-gain tuning setup) to 0. Because the estimation result of Pr0.04 Inertia ratio is recorded, if this parameter becomes abnormal value, manually set to the appropriate value which is obtained from suitable formula or calculation.

Caution If power is turned off within 30 minutes after the end of tuning process, the result of the real-time auto-tuning is not saved. If the result is not saved, manually write parameters to EEPROM and then turn off power.

Basic gain parameter setup table

Stiffness	1st gain/2nd gain				Command response		Adjustment filter	load variation suppression function
	Pr1.00 Pr1.05	Pr1.01 Pr1.06	Pr1.02 Pr1.07	Pr1.04 Pr1.09	Pr2.22		Pr6.48*1	Pr6.24
	Position loop [0.1 /s]	Velocity loop [0.1 Hz]	Velocity loop integration [0.1 ms]	Torque [0.01 ms]	Time constant [0.1 ms]		Time constant [0.1 ms]	Load fiuctuation compensation filter [0.01 ms]
					Standard response mode	Quick response mode 1 to 3		
0	20	15	3700	1500	1919	764	155	2500
1	25	20	2800	1100	1487	595	115	2500
2	30	25	2200	900	1214	486	94	2500
3	40	30	1900	800	960	384	84	2500
4	45	35	1600	600	838	335	64	2500
5	55	45	1200	500	668	267	54	2500
6	75	60	900	400	496	198	44	2500
7	95	75	700	300	394	158	34	2120
8	115	90	600	300	327	131	34	1770
9	140	110	500	200	268	107	24	1450
10	175	140	400	200	212	85	23	1140
11	320	180	310	126	139	55	16	880
12	390	220	250	103	113	45	13	720
13	480	270	210	84	92	37	11	590
14	630	350	160	65	71	28	9	450
15	720	400	140	57	62	25	8	400
16	900	500	120	45	50	20	7	320
17	1080	600	110	38	41	17	6	270
18	1350	750	90	30	33	13	5	210
19	1620	900	80	25	28	11	5	180
20	2060	1150	70	20	22	9	4	140
21	2510	1400	60	16	18	7	4	110
22	3050	1700	50	13	15	6	3	90
23	3770	2100	40	11	12	5	3	80
24	4490	2500	40	9	10	4	3	60
25	5000	2800	35	8	9	4	2	60
26	5600	3100	30	7	8	3	2	50
27	6100	3400	30	7	7	3	2	50
28	6600	3700	25	6	7	3	2	40
29	7200	4000	25	6	6	2	2	40
30	8100	4500	20	5	6	2	2	40
31	9000	5000	20	5	5	2	2	40

*1 Depending on the combination of the driver and the motor, Pr6.48 (Adjustment filter) may change to the value after +1.

Note

• P.4-7 to P.4-87 “Details of parameter”

2. Real-Time Auto-Gain Tuning

Two-degree-of-freedom control mode – Synchronous type

Outline

In this auto-tuning mode, two-degree-of-freedom control is available in addition to real-time auto tuning basic function.
The synchronous type is a mode suitable for locus control of multi axes such as multijoint robot. It is different from other types in individual setting of command response and invalidation of unbalanced load (mass) compensation.
The two-degree-of-freedom control mode, position control type, can be used by setting Pr6.47 Function expansion setup 2 to bit 0 = 1 and bit 3 = 0.

Applicable Range

	Real-time auto-tuning condition
Control Mode	Real-time auto-tuning, two-degree-of-freedom control mode, synchronous typ, can be applied for only position control mode.
Others	• Should be in servo-on condition. • Input signals, such as deviation counter clear and command input inhibit, and parameters, except for controls such as torque limit setup, are correctly set, assuming that the motor can run smoothly.

Caution

Real-time auto-gain tuning may not be executed properly under the conditions described below.
Under these conditions, change the load conditions or operation patterns, or start manual gain tuning (refer to P.5-31 and subsequent).

	Conditions which obstruct real-time auto-gain tuning
Load inertia	• Load is small or large compared with the rotor inertia (less than 3 times or more than 20 times). • The load inertia changes.
Load	• The machine stiffness is extremely low. • Nonlinear characteristics such as backlash exist.
Action pattern	• The motor is running continuously at low speed of 100 [r/min] or lower. • Acceleration/deceleration is slow (2000 [r/min/1[s] or low). • Acceleration/deceleration torque is smaller than unbalanced weighted/viscous torque. • When speed condition of 100 [r/min] or more and acceleration/deceleration condition of 2000 [r/min]/1[s] are not maintained for 50 [ms].

How to Operate

1) Bring the motor to stall (Servo-off).
2) Set up Pr0.02 (Setup of real-time auto-gain tuning mode) to other than 0, 6.

Setup value	Real-time auto-gain tuning	Explanation
0	Invalid	Real-time auto-gain tuning function is disabled.
1	Synchronous	Synchronous control mode. Do not use this mode for unbalanced load or friction compensate. Use this mode first when maintaining command response filter, then switch to another mode as necessary.
2	Synchronous friction compensation	With dynamic friction compensation/viscous friction compensation in addition to those of synchronous mode. Use this mode when the load has a large friction.
3	Stiffness setting	Use this mode when modifying gain filter setting according to stiffness table without making inertia ratio assumption, unbalanced load compensation or friction compensation. When handling a load with larger inertia variations, first estimate inertia in an appropriate mode, e.g. sync mode, and then switch to this mode.
4	Load characteristics update	Use this mode when applying only inertia ratio, dynamic friction compensation and viscous friction compensation among load characteristics while holding gain filter setting.
5	Load characteristic measurement	Estimate load characteristics without changing basic gain setting or friction compensation setting with the help of the setup support software.
6	Load fluctuation response mode	Use this mode when you wish to make robust adjustments for fluctuating loads.

Control parameter is automatically set according to Pr0.03 Real-time auto-tuning stiffness setup.

[Example of real-time auto-tuning setup]

When using this function for the first time with multijoint robot, set initial stiffness to a lower value in accordance with the load capacity in the synchronous friction compensation mode (Pr0.02 = 2), and incline the arm by 45 degrees, and then estimate the load characteristics with short distance reciprocating running (1-2 rotations of motor shaft).

To see effects of quadrant switching due to friction compensation, try Pr0.02 = 1.

To perform only load characteristics estimation, use the load characteristic update mode Pr0.02 = 4.

Because the inertia ratio and resonance characteristic of multijoint robot vary with orientation, disable the auto-tuning (Pr2.00 = 0) after estimation of load characteristics. In the load characteristic measurement mode (Pr0.02 = 5), the load characteristic change due to arm orientation can be observed without affecting operation.

When adjusting during operation, enter the stiffness setup mode (Pr0.02 = 3). While holding load characteristic compensation, change the stiffness setting and check locus accuracy and positioning performance.

Note

- While the auto-tuning is valid, parameters that are to be automatically adjusted cannot be changed.

Related page
- P.4-7 to P.4-87 “Details of parameter”

3) When the servo is tuned on, input the action command.
4) As the load characteristics are correctly estimated, Pr0.04 Inertia ratio will be updated. In a specific mode, the following parameters are changed.
   Pr6.07 Torque command additional value
   Pr6.08 Positive direction torque compensation value
   Pr6.09 Negative direction torque compensation value
   Pr6.50 Viscous friction compensation gain
   Load characteristics estimation speed can be set by Pr6.31 Real time auto tuning estimation speed.
5) When value of Pr0.03 Real-time auto-tuning stiffness setup is increased, the motor responsiveness will be improved.
   Determine the most appropriate stiffness in relation to the positioning setup time and vibration condition.
6) To save the result to memory, write the date to EEPROM.

Caution If power is turned off within 30 minutes after the end of tuning process, the result of the real-time auto-tuning is not saved. If the result is not saved, manually write parameters to EEPROM and then turn off power.

Note
- While the auto-tuning is valid, parameters that are to be automatically adjusted cannot be changed.

Related page
- P.2-132 "EEPROM Writing Mode"
- P.4-7 to P.4-87 "Details of parameter"

Parameters set/changed by real-time auto-gain tuning

- Parameters which are updated

The real-time auto-tuning function updates the following parameters according to Pr0.02 Real-time auto-tuning setup by using the load characteristic estimate values.

Class	No.	Title	Function
0	04	Inertia ratio	In the synchronous mode (Pr0.02 = 1), synchronous friction compensation mode (Pr0.02 = 2) and load characteristic update mode (Pr0.02 = 4), this parameter will be updated.
6	08	Positive direction torque compensation value	In the synchronous friction compensation mode (Pr0.02 = 2) and load characteristic update mode (Pr0.02 = 4), this parameter will be updated.
6	09	Negative direction torque compensation value	
6	50	Viscous friction compensation gain	

- Parameters which are updated to setup value corresponding to stiffness setup

The real-time auto-tuning function updates the following basic gain setup parameters according to Pr0.03 Real-time auto-tuning stiffness setup.

Class	No.	Title	Function
1	00	1st gain of position loop	When real-time auto-tuning is valid (Pr0.02 = 1-4), updates the setup value according to the stiffness. Refer to P.5-10 Basic gain parameter setup table.
1	01	1st gain of velocity loop	
1	02	1st time constant of velocity loop integration	
1	04	1st time constant of torque filter	
1	05	2nd gain of position loop	
1	06	2nd gain of velocity loop	
1	07	2nd time constant of velocity loop integration	
1	09	2nd time constant of torque filter	
6	48	Adjust filter	In the synchronous mode, synchronous friction compensation mode and stiffness setup mode (Pr0.02 = 1-3), the setting will be updated according to stiffness.

- Parameters which are set to fixed value

The real-time auto-tuning function sets the following parameters to fixed values or uses the current setup values.

Class	No.	Title	Setup value when fixed parameter setup is valid.
1	03	1st filter of speed detection	0
1	08	2nd filter of speed detection	
1	10	Velocity feed forward gain	1000 (100 %)
1	11	Velocity feed forward filter	0
1	12	Torque feed forward gain	1000 (100 %)
1	13	Torque feed forward filter	0
2	22	Command smoothing filter	Holds the current setup value. *1
6	07	Torque command additional value	0
6	10	Function expansion setup	bit4=1
6	49	Adjust/Torque command attenuation term	Tens digit set as 1 and ones digit is kept as is.

*1 If noise generates, change the setting to appropriate value (e.g. 3 ms = setup value: 30).

- Parameters which are set in respons to gain switching setup

The real-time auto-tuning function sets the following parameters according to Pr0.02 Real-time auto-tuning setup, or uses current setup values.

Class	No.	Title	Function
1	14	2nd gain setup	In the synchronous mode, synchronous friction compensation mode or stiffness setup mode (Pr0.02 = 1 to 3), sets to 1.
1	15	Mode of position control switching	In the synchronous mode, synchronous friction compensation mode or stiffness setup mode (Pr0.02 = 1 to 3), sets to 0.
1	16	Delay time of position control switching	In the synchronous mode, synchronous friction compensation mode or stiffness setup mode (Pr0.02 = 1 to 3), sets to 10.
1	17	Level of position control switching	In the synchronous mode, synchronous friction compensation mode or stiffness setup mode (Pr0.02 = 1 to 3), sets to 0.
1	18	Hysteresis at position control switching	
1	19	Position gain switching time	In the synchronous mode, synchronous friction compensation mode or stiffness setup mode (Pr0.02 = 1 to 3), sets to 10.
1	20	Mode of velocity control switching	Sets to 0 if real-time auto-tuning is valid (Pr0.02 = 1 to 4).
1	21	Delay time of velocity control switching	
1	22	Level of velocity control switching	
1	23	Hysteresis at velocity control switching	
1	24	Mode of torque control switching	
1	25	Delay time of torque control switching	
1	26	Level of torque control switching	
1	27	Hysteresis at torque control switching	
6	05	Position 3rd gain valid time	When the real-time auto-tuning remains valid (Pr0.02 = 1 to 4), uses the current setup value.
6	06	Position 3rd gain scale factor	

- Parameters which are always set to invalid

The following settings are always set to invalid when Pr0.02 Real-time auto-tuning setup is not 0. Note that setup values of parameters remain unchanged.

Class	No.	Title	Function
6	10	Function expansion setup	Instantaneous speed observer function enable bit (bit 0), disturbance observer function enable bit (bit 1) and inertia ratio switching function enable bit (bit 3) are internally disabled.
6	13	2nd Inertia ratio	Parameter setup can be changed, but inertia ration switching function is disabled.

The following settings and parameters are set automatic for enable/disable state of Pr 6.10 “Function expansion setting” load variation suppression function automatic adjustment.

Class	No.	Title	Function
6	10	Function expansion setup	When set to Pr 6.10 bit14=1 in case of stiffness setting is enabled, load variation suppression function will become enabled (bit1 = 1). When set to Pr 6.10 bit14=0,it is disabled(bit1 = 1).

Class	No.	Title	Function
6	23	Load fluctuation compensation gain	When set to Pr 6.10 bit14=1 in case of stiffness setting is enabled, sets to 90%. When set to Pr 6.10 bit14=0, set to 0%.
6	24	Load fluctuation compensation filter	When set to Pr 6.10 bit14=1 in case of stiffness setting is enabled, updates to match rigidity. When set to Pr 6.10 bit14=0, value is held.
6	73	Load estimation filter	When set to Pr 6.10 bit14=1 in case of stiffness setting is enabled, sets to 0.13 ms. When set to Pr 6.10 bit14=0, set to 0 ms.
6	74	Torque compensation frequency 1	Regardless value of the Pr 6.10 bit 14, sets to 0.
6	75	Torque compensation frequency 2	Regardless value of the Pr 6.10 bit 14, sets to 0.
6	76	Load estimate numbers	When set to Pr 6.10 bit14=1 in case of stiffness setting is enabled, sets to 4. When set to Pr 6.10 bit14=0, set to 0.

In case Pr 0.02 “Real-time automatic tuning mode setting” = 6, (load fluctuation response mode), the setting will be changed to the following.

Class	No.	Title	Function
6	10	Function expansion setup	Load fluctuation suppression function always become enabled (bit1 = 1)
6	23	Load fluctuation compensation gain	Sets to 100%.
6	24	Load fluctuation compensation filter	Updates to match rigidity.
6	73	Load estimation filter	Sets to 0.13 ms.
6	74	Torque compensation frequency 1	Updates to match rigidity.
6	75	Torque compensation frequency 2	Updates to match rigidity.
6	76	Load estimate numbers	Sets to 4.

Caution

(1) Immediately after the first servo-on upon start up; or after increasing Pr0.03 Real-time auto-tuning stiffness setup, abnormal sound or oscillation may be generated until the load characteristics estimation is stabilized. If such abnormality lasts or repeats for 3 or more reciprocating operations, take the following countermeasures.
1) Lower the setup of Pr0.03 (Selection of machine stiffness at real-time auto-gain tuning).
2) Set Pr0.02 Real-time auto-tuning setup to 0 to disable the real-time auto-tuning.
3) Set Pr0.04 Inertial ratio to the calculational value of the equipment and set Pr6.07(Torque command addition value), Pr6.08 (Positive direction compensation value), Pr6.09 (Negative direction compensation value) and Pr6.50 (Viscous friction compensation gain) to 0.
4) Disabale load variation suppression function. (bit1=0 after Pr 6.10 bit14=0).

(2) When abnormal noise and oscillation occur, Pr0.04 (Inertia ratio) or Pr6.07 (Torque command additional value), Pr6.08 (Positive direction torque compensation value), Pr6.09 (Negative direction compensation value), Pr6.50 (Viscous friction compensation gain) might have changed extreme value.Take the same measures as the above in these cases.

(3) Among the results of real-time auto-gain tuning, Pr0.04 (Inertia ratio) and Pr6.07 (Torque command additional value), Pr6.08 (Positive direction torque compensation value), Pr6.09 (Negative direction compensation value), Pr6.50 (Viscous friction compensation gain) will be written to EE-PROM every 30 minutes. When you turn on the power again,the auto-gain tuning will be executed using the latest data as initial values.

(4) Because the control gain is updated while the motor stops, changed setting value of Pr0.03 “Real-time auto-tuning stiffness setup” may not be reflected if the motor cannot stop due to excessively low gain or application of a command that directs the motor to turn in the same direction continuously. If the changed stiffness setting value is reflected after motor stops, it may generate abnormal sound or oscillate.
After changing stiffness, stop the motor and check to see that the new stiffness setting is made effective.

Invalidation of Real-Time Auto-Gain Tuning

You can stop the automatic calculation of Pr0.04 (Inertial ratio) and invalidate the real-time auto-gain tuning by setting up Pr0.02 (Real-time auto-gain tuning setup) to 0.
Because the estimation result of Pr0.04 Inertia ratio is recorded, if this parameter becomes abnormal value, manually set to the appropriate value which is obtained from suitable formula or calculation.

Caution If power is turned off within 30 minutes after the end of tuning process, the result of the real-time auto-tuning is not saved. If the result is not saved, manually write parameters to EEPROM and then turn off power.

Basic gain parameter setup table

Stiffness	1st gain/2nd gain				Adjustment filter	load variation suppression function	For load variation support mode (Pr0.02 = 6) only			
	Pr1.00 Pr1.05	Pr1.01 Pr1.06	Pr1.02 Pr1.07	Pr1.04 Pr1.09	Pr6.48*1	Pr6.24	Pr1.00 Pr1.05	Pr6.24	Pr6.74	Pr6.75
	Position loop [0.1 /s]	Velocity loop [0.1 Hz]	Velocity loop integration [0.1 ms]	Torque [0.01 ms]	Time constant [0.1 ms]	Load fiuctuation compensation filter [0.01 ms]	Position loop [0.1 /s]	Load fiuctuation compensation filter [0.01 ms]	Torque compensation ferquecy1 [0.1 Hz]	Torque compensation ferquecy2 [0.1 Hz]
0	20	15	3700	1500	155	2500	15	2500	25	7
1	25	20	2800	1100	115	2500	20	2500	34	10
2	30	25	2200	900	94	2500	25	2500	42	12
3	40	30	1900	800	84	2500	30	2500	51	15
4	45	35	1600	600	64	2500	35	2500	59	17
5	55	45	1200	500	54	2500	45	2500	76	22
6	75	60	900	400	44	2500	60	2500	104	30
7	95	75	700	300	34	2120	75	2120	129	37
8	115	90	600	300	34	1770	90	1770	153	44
9	140	110	500	200	24	1450	110	1450	184	53
10	175	140	400	200	23	1140	140	1140	231	66
11	320	180	310	126	16	880	180	880	290	83
12	390	220	250	103	13	720	220	720	346	99
13	480	270	210	84	11	590	270	590	413	118
14	630	350	160	65	9	450	350	450	512	146
15	720	400	140	57	8	400	400	400	570	163
16	900	500	120	45	7	320	500	320	678	194
17	1080	600	110	38	6	270	600	270	678	194
18	1350	750	90	30	5	210	750	210	678	194
19	1620	900	80	25	5	180	900	180	678	194
20	2060	1150	70	20	4	140	1150	140	678	194
21	2510	1400	60	16	4	110	1400	110	678	194
22	3050	1700	50	13	3	90	1700	90	678	194
23	3770	2100	40	11	3	80	2100	80	678	194
24	4490	2500	40	9	3	60	2500	60	678	194
25	5000	2800	35	8	2	60	2800	60	678	194
26	5600	3100	30	7	2	50	3100	50	678	194
27	6100	3400	30	7	2	50	3400	50	678	194
28	6600	3700	25	6	2	40	3700	40	678	194
29	7200	4000	25	6	2	40	4000	40	678	194
30	8100	4500	20	5	2	40	4500	40	678	194
31	9000	5000	20	5	2	40	5000	40	678	194

*1 The value of Pr6.48 (Adjustment filter) has additional value +1 for B to H frames.

Note • For details of parameters, refer to P.4-7 “Details of parameter” .

3. Adaptive filter

Adaptive filter

Outline

Estimates the resonance frequency out of vibration component presented in the motor speed in motion, then removes the resonance component from the torque command by setting up the notch filter coefficient automatically, hence reduces the resonance vibration.

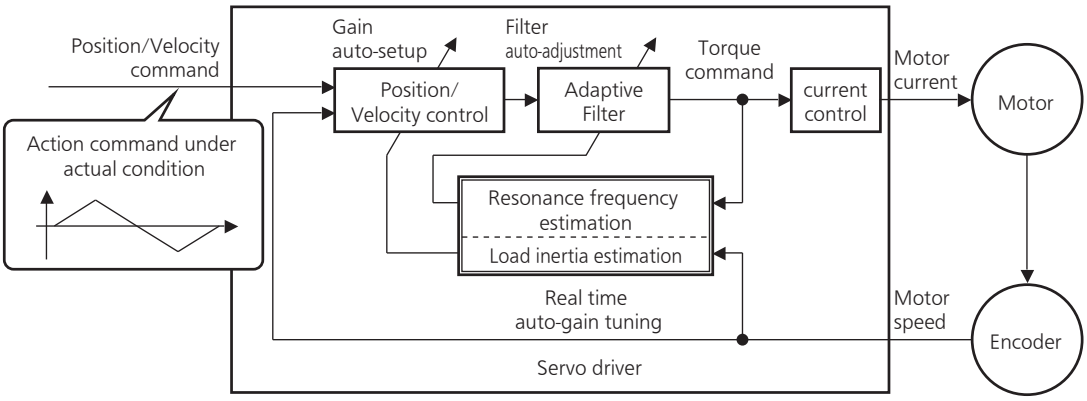

Applicable Range

This function works under the following condition.

	Conditions under which the Adaptive filter is activated
Control Mode	• Applies to other control modes than torque control.
Others	• Should be servo-on status. • Elements other than control parameters, such as deviation counter clear command inhibit and torque limit are appropriately set, enabling the motor to run normally.

Caution

In the following condition, normal operation may not be expected - manually set the notch filter to prevent resonance.

	Conditions which obstruct adaptive filter action
Resonance point	• Resonance frequency is lower than 3 times. • Resonance peak is low, or control gain is low where the motor speed is not affected by this. • Multiple resonance of 3 or more points exist.
Load	• Motor speed variation with high harmonic component is generated due to non-linear factors such as backlash.
Command pattern	• Acceleration/deceleration is rapid such as 30000[r/min] per 1[s].

How to Operate

Enter the action command with Pr2.00 Adaptive filter mode set to a value other than 0. If the resonance point affects the motor speed, parameters of 3rd notch filter and/or 4th notch filters are automatically set according to the number of adaptive filters.

Set the operation of the adaptive filter to the following parameter.

Class	No.	Title	Setup value	Function
2	00	Adaptive filter mode setup	0	[Adaptive filter: invalid] The adaptive filter is disabled. Parameters related to the 3rd and 4th notch filter hold the current value.
			1	[Adaptive filter: 1 filter is valid] One adaptive filter is enabled. Parameters related to the 3rd notch filter will be updated based on adaptive performance.
			2	[Adaptive filter: 2 filters are valid] Two adaptive filters are enabled. Parameters related to the 3rd and 4th notch filters will be updated based on adaptive performance.
			3	[Resonance frequency measurement mode] Measure the resonance frequency. Result of measurement can be checked with PANATERM. Parameters related to the 3rd and 4th notch filter hold the current value.
			4	[Clear result of adaptation] Parameters related to the 3rd and 4th notch filter are disabled and results of adaptive operation are cleared.
			5	[High-precision adaptive filter] Two adaptive filters are enabled. Parameters related to the 3rd and 4th notch filters will be updated based on the results of adaptive performance. Use of this setup value is recommended when using 2 adaptive filters.
			6	[For manufacturer's use] PANATERM' s fit gain function used internally. Do not use this setup value in the normal condition.

At the same time, the following parameters are automatically set.

Class	No.	Title	Function
2	07	3rd notch frequency	In no resonance point is found, the frequency is set to 5000.
2	08	3rd notch width selection	Automatically set when the adaptive filter is active.
2	09	3rd notch depth selection	
2	10	4th notch frequency	Notch frequency is automatically set to the 2nd resonance frequency estimated by the adaptive filter. In no resonance point is found, the frequency is set to 5000.
2	11	4th notch width selection	Automatically set when 2 adaptive filters are active.
2	12	4th notch depth selection	

Related page • P.4-7 to P.4-87 “Details of parameter”

Caution

(1) Immediately after the first servo-on at start up; or after increasing stiffness setting with the real-time auto-tuning enabled, abnormal sound or oscillation may be generated until the adaptive filter stabilizes. If such abnormality lasts or repeats for 3 or more reciprocating operations, take the following countermeasures.
  1) Write the parameters which have given the normal operation into EEPROM.
  2) Lower the setup of Pr0.03 (Selection of machine stiffness at real-time auto-gain tuning).
  3) Invalidate the adaptive filter by setting up Pr2.00 (Setup of adaptive filter mode) to 0. (Reset of inertia calculation and adaptive action)
  4) Set up the notch filter manually.

(2) Abnormal sound or oscillation may excessively change the setup value of 3rd and 4th notch filters. If such change occurs, disable the adaptive filter as described in step 3) above, change setup value of Pr2.07 3rd notch frequency and Pr2.10 4th notch frequency to 5000 (disable), and then enable the adaptive filter again.

(3) The 3rd filters (Pr2.07-Pr2.09) and 4th notch filters (Pr2.10-Pr2.12) are written to EEPROM every 30 minutes. Upon power up, these data are used as default values during adaptive process.

Related page • P.4-7 to P.4-87 “Details of parameter”

4. Manual Gain Tuning (Basic)

Outline

As explained previously, MINAS-A6 series features the automatic gain tuning function, however, there might be some cases where this automatic gain tuning cannot be adjusted properly depending on the limitation on load conditions. Or you might need to readjust the tuning to obtain the optimum response or stability corresponding to each load.
Here we explain this manual gain tuning method by each control mode and function.

Before Making a Manual Adjustment

By monitoring waveforms using the waveform graphic function of the setup support software PANATERM installed on the PC, accurate adjustment can be positively, quickly and easily done when compared with that performed on the front panel.

Waveform graphic function of the PANATERM

You can display the command to the motor, motor movement (speed, torque command and deviation pulses) as a waveform graphic on PC display. Refer to P.7-28, "Outline of the Setup Support Software, PANATERM" of Supplement.

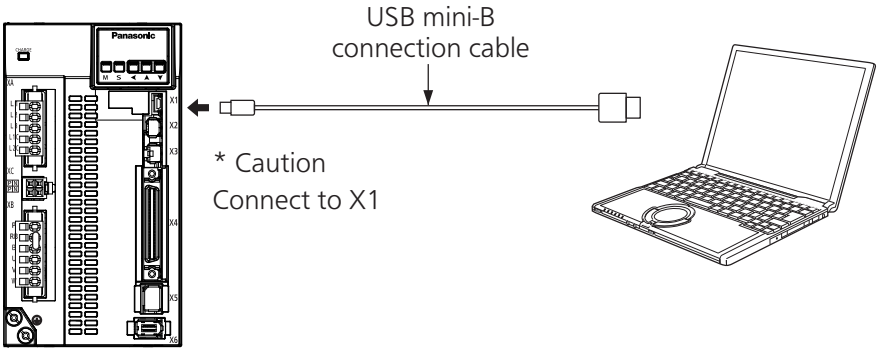

Caution Please download the Setup support software “PANATERM” from our web site and use after install to the PC.

Related page
- P.7-28 “Outline of Setup support software “PANATERM”

4. Manual Gain Tuning (Basic)

Adjustment in Position Control Mode

Position control of MINAS-A6 series is described in Block diagram of P.3-15, 3-16.
Make adjustment in position control per the following procedures.

(1) Set up the following parameters to the values of the table below.

Parameter No. (Pr □□)	Title of parameter	Standard value
1.00	1st gain of position loop	270
1.01	1st gain of velocity loop	150
1.02	1st time constant of velocity loop integration	370
1.03	1st filter of velocity detection	0
1.04	1st time constant of torque filter time	152
1.10	Velocity feed forward	0
1.11	Time constant of feed forward filter	0
1.05	2nd gain of position loop	270
1.06	2nd gain of velocity loop	150
1.07	2nd time constant of velocity loop integration	370
1.08	2nd filter of speed detection	0
1.09	2nd time constant of torque filter	152
2.01	1st notch frequency	5000
2.02	1st notch width selection	2

Parameter No. (Pr □□)	Title of parameter	Standard value
0.04	Inertia ratio	100
0.02	Setup of real time auto-gain tuning mode	0
2.00	Adaptive filter setup mode	0
2.14	1st damping frequency	0
2.15	Setup of 1st damping filter	0
2.16	2nd damping frequency	0
2.17	Setup of 2nd damping filter	0
1.14	2nd gain setup	0
1.15	Mode of position control switching	0
1.16	Delay time of position control switching delay	0
1.17	Level of position control switching	0
1.18	Hysteresis at position control switching	0
1.19	Position gain switching time	0
2.22	Positional command smoothing filter	1
2.23	Positional command FIR filter	0

(2) Enter the inertia ratio of Pr0.04. Measure the ratio or setup the calculated value.
(3) Make adjustment using the standard values below.

Order	Parameter No. (Pr □□)	Title	Standard value	How to adjust
1	Pr1.01	1st gain of velocity loop	300	Increase the value within the range where no abnormal noise and no vibration occur. If they occur, lower the value.
2	Pr1.04	1st time constant of torque filter	50	When vibration occurs by changing Pr1.01, change this value. Setup so as to make Pr1.01 x Pr1.04 becomes smaller than 10000. If you want to suppress vibration at stopping, setup larger value to Pr1.04 and smaller value to Pr1.01. If you experience too large vibration right before stopping, lower than value of Pr1.04.
3	Pr1.00	1st gain of position loop	500	Adjust this observing the positioning time. Larger the setup, faster the positioning time you can obtain, but too large setup may cause oscillation.
4	Pr1.02	1st time constant of velocity loop integration	250	Setup this value within the range where no problem occurs. If you setup smaller value, you can obtain a shorter positioning time, but too small value may cause oscillation. If you setup too large value, deviation pulses do not converge and will be remained. Increase the value within the range where no abnormal noise occurs.
5	Pr1.10	Velocity feed forward gain	300	Too large setup may result in overshoot or chattering of position complete signal, hence does not shorten the settling time. If the command pulse is not even,you can improve by setting up Pr1.11 (Feed forward filter) to larger value.

Related page
• P.4-7 to P.4-87 “Details of parameter” • P.3-15 “Control Block Diagram”

4. Manual Gain Tuning (Basic)

Adjustment in Velocity Control Mode

Velocity control of MINAS-A6 series is described in Block Diagram of P.3-17,18 of Velocity Control Mode.
Adjustment in velocity control is almost same as that in position control described in "Adjustment in Position Control Mode", and make adjustments of parameters per the procedures except the gain setup of position loop gain (Pr1.00, Pr1.05) and the setup of velocity feed forward gain (Pr1.10).

4. Manual Gain Tuning (Basic)

Adjustment in Torque Control Mode

Torque control of MINAS-A6 series is described in P.3-19 “Block Diagram” of Torque Control Mode.
This torque control is based on velocity control while making Pr3.21 [Speed limit value 1], Pr3.22 [Speed limit value 2] or SPL input as a speed limit. Here we explain the setup of speed limiting value.

- Setup of speed limiting value

The torque command selection (Pr3.17) specifies the setup method.

Pr3.17 = 0	Set up by using speed limit value 1 (Pr3.21)
Pr3.17 = 1	Set up by using analog input (SPL)
Pr3.17 = 2	For positive direction, set up by using the speed limit value 1(Pr3.21) For negative direction, set up by using the speed limit value 2(Pr3.22)

- When the motor speed approaches to the speed limiting value, torque control following the analog torque command shifts to velocity control based on the speed limiting value.
- In order to stabilize the movement under the speed limiting, you are required to set up the parameters according to the above-mentioned "Adjustment in Velocity Control Mode".
- When the speed limiting value is too low or the velocity loop gain is too low, or when the time constant of the velocity loop integration is 10000 (invalid), the input to the torque limiting portion of the above fig. becomes small and the output torque may not be generated as the analog torque command.
- When not using the speed limit but using only torque command, disable the torque filter and notch filter, and set speed limit value to the maximum speed and set velocity loop gain to a value as high as possible.

Note Only for Basic Type is not provided with analog input.

Related page • P.3-34 “Inputs and outputs on connector X4”

4. Manual Gain Tuning (Basic)

Adjustment in Full-Closed Control Mode

Full-closed control of MINAS-A6 series is described in Block diagram of P.3-20,21 of Full-Closed Control.
Adjustment in full-closed control is almost same as that in position control described in P.5-31 "Adjustment in Position Control Mode" , and make adjustments of parameters per the procedures except cautions of P.3-12, "Outline of Full-Closed Control" (difference of command unit and difference of electronic gear).
Here we explain the setup of feedback scale ratio and hybrid deviation excess of full-closed control.

1) Setup of external scale ratio

Setup the external scale ratio using the numerator of external scale division (Pr3.24) and denominator of external scale division (Pr3.25).

- Check the encoder feedback pulse counts per one motor revolution and the external scale pulse counts per one motor revolution, then set up the numerator of external scale division (Pr3.24), and denominator of external scale division (Pr3.25) so that the following formula can be established.

$$\frac{\text{Pr3.24}}{\text{Pr3.25}} = \frac{\text{Number of encoder feedback pulses per motor rotation}}{\text{Number of external scale pulses per motor rotation}}$$

- If this ratio is incorrect, a gap between the position calculated from the encoder feedback pulse counts and that of calculated from the external scale pulse counts will be enlarged and hybrid deviation excess (Err25.0) will be triggered when the work or load travels a long distance.
- When you set up Pr3.24 to 0, the encoder feedback pulse counts will be automatically set up.

2) Setup of hybrid deviation excess

Set up the minimum value of hybrid deviation excess (Pr3.28) within the range where the gap between the motor (encoder) position and the load (feedback scale) position will be considered to be an excess.

- Note that the hybrid deviation excess (Err25.0) may be generated under other conditions than the above 1), such as reversed connection of the external scale or loose connection of the motor and the load.

Caution

(1) Enter the command pulses based on the feedback scale reference.
(2) The feedback scales to used for full-closed control are as HP.
(3) To prevent the runaway and damage of the machine due to the setup of the feedback scale, setup the hybrid deviation excess (Pr3.28) to the appropriate value, in the unit of feedback scale resolution.
(4) We recommend the external scale as 1/40 ≤ external scale ratio ≤ 1280.
Even within this range, if you setup the external scale ratio to smaller value than 50/position loop gain (Pr1.00 and 1.05), you may not be able to control by one pulse unit. If you set up too large external scale ratio, you may expect larger noise in movement.

Note
- Only for Basic Type is not provided with X5 (For external scale connector).

Related page
- P.3-34 "Inputs and outputs on connector X4"
- P.6-3 "Protective Function"

4. Manual Gain Tuning (Basic)

Gain Switching Function

By selecting appropriate gain based on internal data or external signal, the following effects can be obtained.

- Decrease the gain at the time of stoppage (servo lock) to reduce vibration.
- Increase the gain at the time of stoppage (setting) to shorten the settling time.
- Increase the gain during operation to improve command compliance.
- Based on condition of the equipment, change the gain with external signal.

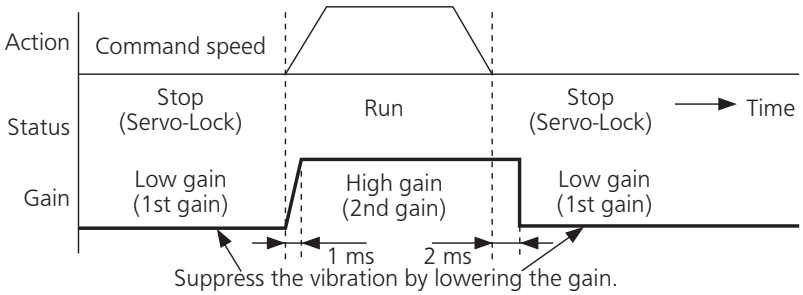

<Example>

Following is the example when you want to reduce the noise at motor in stall (Servo-Lock), by setting up to lower gain after the motor stops.

- Make adjustment referring to the basic gain parameter setup table (P.5-10) as well.

Parameter No. (Pr □□)	Title of parameter	Execute manual gain-tuning without gain switching	Set up the same value as Pr1.05 to 1.09 (2nd gain) to Pr1.00 to 1.04 (1st gain)	Set up Pr1.14 to 1.19 (Gain switching condition)	Adjust Pr1.01 and 1.04 at stopping (1st gain)
1.00	1st gain of position loop	630			
1.01	1st gain of velocity loop	350			270
1.02	1st time constant of velocity integration	160			
1.03	1st filter of velocity detection	0			
1.04	1st time constant of torque filter	65			84
1.10	Velocity feed forward	300			
1.11	Filter of velocity feed forward	50			
1.05	2nd gain of position loop		630		
1.06	2nd gain of velocity loop		350		
1.07	2nd time constant of velocity integration		160		
1.08	2nd filter of velocity detection		0		
1.09	2nd time constant of torque filter time		65		
1.14	Action setup of 2nd gain	0		1	
1.15	1st mode of control switching			7	
1.16	1st delay time of control switching			30	
1.17	1st level of control switching			0	
1.18	1st hysteresis of control switching			0	
1.19	Switching time of position gain			0	
0.04	Inertia ration	• Enter the known value from load calculation • Measure the inertia ratio by executing nor mal auto-gain tuning • Default is 250			

Related page • P.4-7 to P.4-87 “Details of parameter”

Setup of Gain Switching Condition

- Positing control mode, Full-closed control mode (○: Corresponding parameter is valid, – : invalid)

Setup of gain switching condition			Setup parameters at position control, full-closed control		
Pr1.15	Switching condition to 2nd gain	Fig.	Delay time *1	Level	Hysteresis *2
			Pr1.16	Pr1.17	Pr1.18
0	Fixed to 1st gain		–	–	–
1	Fixed to 2nd gain		–	–	–
2	Gain switching input		–	–	–
3	Torque command	A	○	○ [%]	○ [%]
4	Invalid (Fixed to 1st gain)		–	–	–
5	Speed command	C	○	○ [r/min]	○ [r/min]
6	Position deviation	D	○	○ *3 [pulse]	○ *3 [pulse]
7	Position command exists.	E	○	–	–
8	Not in positioning complete	F	○	–	–
9	Speed	C	○	○ [r/min]	○ [r/min]
10	Command exists + velocity	G	○	○ [r/min] *5	○ [r/min] *5

- Velocity control mode

Setup of gain switching condition			Setup parameters at velocity control mode		
Pr1.20	Switching condition to 2nd gain	Fig.	Delay time *1	Level	Hysteresis *2
			Pr1.16, 1.21	Pr1.17, 1.22	Pr1.18, 1.23
0	Fixed to 1st gain		–	–	–
1	Fixed to 2nd gain		–	–	–
2	Gain switching input		–	–	–
3	Torque command	A	○	○ [%]	○ [%]
4	Variation of speed command is large.	B	–	○ *4 [10(r/min)/s]	○ *4 [10(r/min)/s]
5	Speed command	C	○	○ [r/min]	○ [r/min]

- Torque control mode

Setup of gain switching condition			Setup parameters at torque control mode		
Pr1.24	Switching condition to 2nd gain	Fig.	Delay time *1	Level	Hysteresis *2
			Pr1.16, 1.25	Pr1.17, 1.26	Pr1.18, 1.27
0	Fixed to 1st gain		–	–	–
1	Fixed to 2nd gain		–	–	–
2	Gain switching input, GAIN ON		–	–	–
3	Variation of torque command is large.	A	○	○ [%]	○ [%]

*1 Delay time (Pr1.16, 1.12 and 1.25) will be valid only when returning from 2nd to 1st gain.
*2 Hysteresis (Pr1.18, 1.23 and 1.27) is defined as the fig. below shows.
*3 Designate with either the encoder resolution or the external scale reso lution depending on the control mode.
*4 When you make it a condition that there is speed variation of 10 r/min in 1s, set up the value to 1.
*5 When Pr1.15=10, the meanings of delay time, level and hysteresis are different from the normal. (refer to Fig. G)

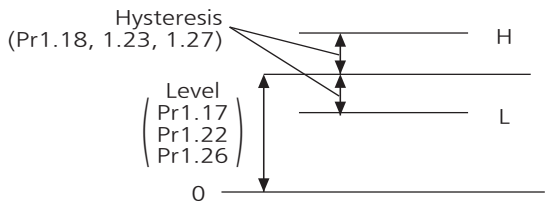

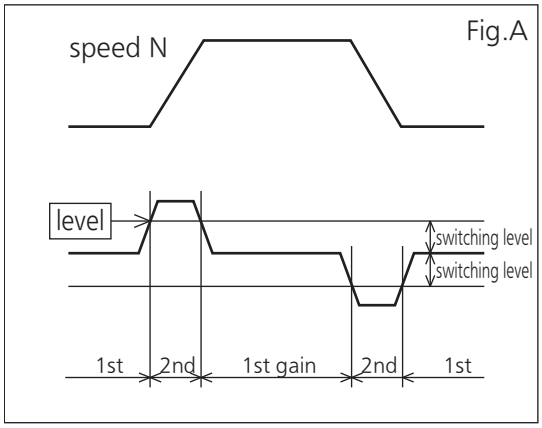

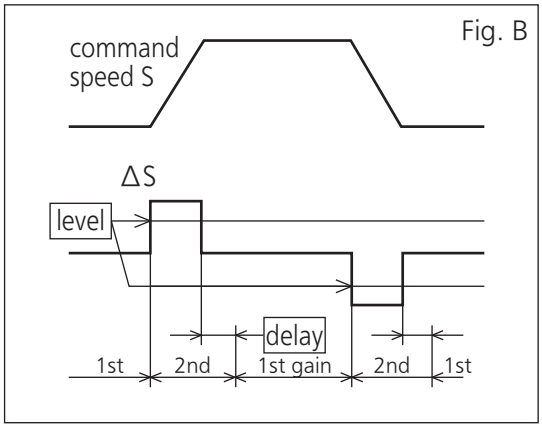

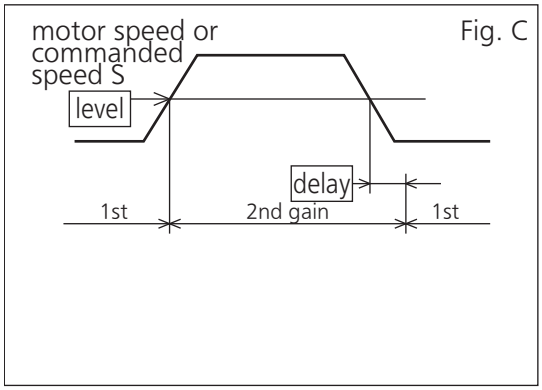

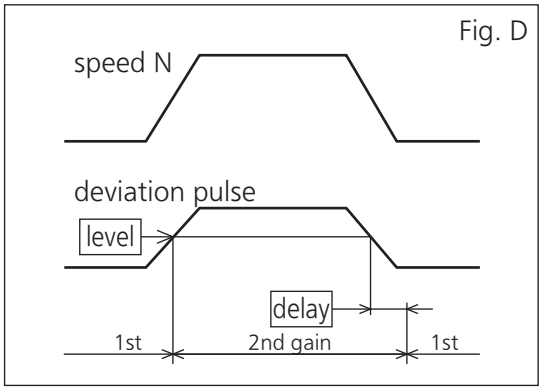

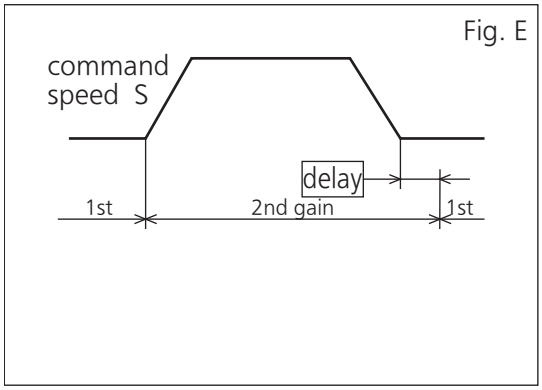

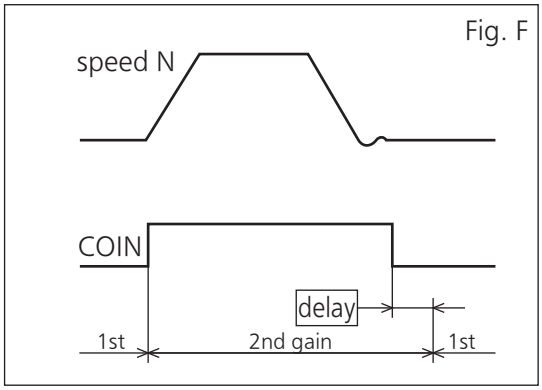

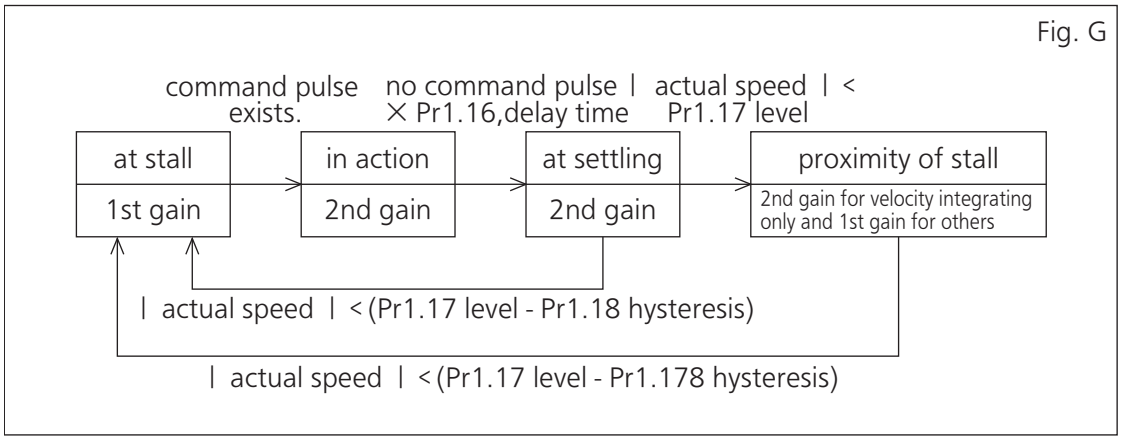

Caution Above Fig. does not reflect a timing lag of gain switching due to hysteresis (Pr1.18, 1.23 and 1.27).

4. Manual Gain Tuning (Basic)

Suppression of Machine Resonance

In case of a low machine stiffness, you cannot set up a higher gain because vibration and noise occur due to oscillation caused by axis distortion or other causes. By suppressing the resonance peak at the notch filter, higher gain can be obtained or the level of vibration can be lowered.

1. Torque command filter (Pr1.04 and Pr1.09)
   Sets up the filter time constant so as to damp the frequency at vicinity of resonance frequency. You can obtain the cut off frequency of the torque command filter in the following formula.
   Cut off frequency (Hz) fc = 1 / (2 π x parameter setup value x 0.00001)

2. Notch filter (Pr2.00, 2.07 to Pr2.12)
   - Adaptive filter
     MINASA-5 series feature the adaptive filter. With this filter you can control vibration of the load which resonance points vary by machine by machine and normal notch filter or torque filter cannot respond. Enter the action command with Pr2.00 Adaptive filter mode set to a value other than 0.
     If the resonance point affects the motor speed, parameters of 3rd notch filter and/or 4th notch filters are automatically set according to the number of adaptive filters.

Pr2.00	Adaptive filter mode	1: Adaptive filter is valid 2: 2 adaptive filters are valid.
Pr2.07	3rd notch frequency	In no resonance point is found, the frequency is set to 5000.
Pr2.08	3rd notch width selection	Automatically set when the adaptive filter is active.
Pr2.09	3rd notch depth selection	
Pr2.10	4th notch frequency	Notch frequency is automatically set to the 2nd resonance frequency estimated by the adaptive filter. In no resonance point is found, the frequency is set to 5000.
Pr2.11	4th notch width selection	Automatically set when 2 adaptive filters are active.
Pr2.12	4th notch depth selection	

   - Notch filter (Pr2.01 to 2.12,Pr2.24 to 2.26)
     MINASA-6 series feature 5 normal notch filters. You can adjust frequency and width and depth.

Pr2.01	1st notch frequency	Set the center frequency of the 1st notch filter. *1
Pr2.02	1st notch width selection	Set the width of notch at the center frequency of the 1st notch filter.
Pr2.03	1st notch depth selection	Set the depth of notch at the center frequency of the 1st notch filter.
Pr2.04	2nd notch frequency	Set the center frequency of the 2nd notch filter. *1
Pr2.05	2nd notch width selection	Set the width of notch at the center frequency of the 2nd notch filter.
Pr2.06	2nd notch depth selection	Set the depth of notch at the center frequency of the 2nd notch filter.
Pr2.07	3rd notch frequency	Set the center frequency of the 3rd notch filter. *1
Pr2.08	3rd notch width selection	Set the width of notch at the center frequency of the 3rd notch filter.
Pr2.09	3rd notch depth selection	Set the depth of notch at the center frequency of the 3rd notch filter.
Pr2.10	4th notch frequency	Set the center frequency of the 4th notch filter. *1
Pr2.11	4th notch width selection	Set the width of notch at the center frequency of the 4th notch filter.
Pr2.12	4th notch depth selection	Set the depth of notch at the center frequency of the 4th notch filter.

Pr2.24	5th notch frequency	Set the center frequency of the 5th notch filter. *1
Pr2.25	5th notch width selection	Set the width of notch at the center frequency of the 5th notch filter.
Pr2.26	5th notch depth selection	Set the depth of notch at the center frequency of the 5th notch filter.

*1 The notch filter function will be invalidated by setting up this parameter to "5000".

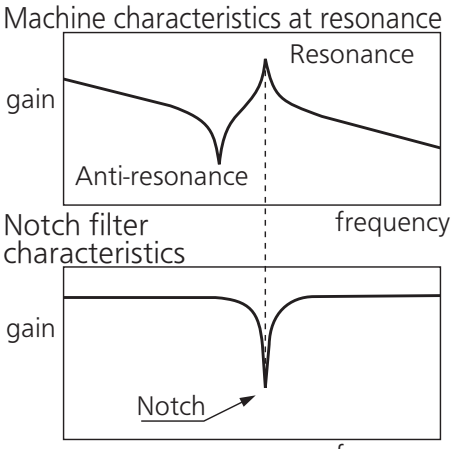

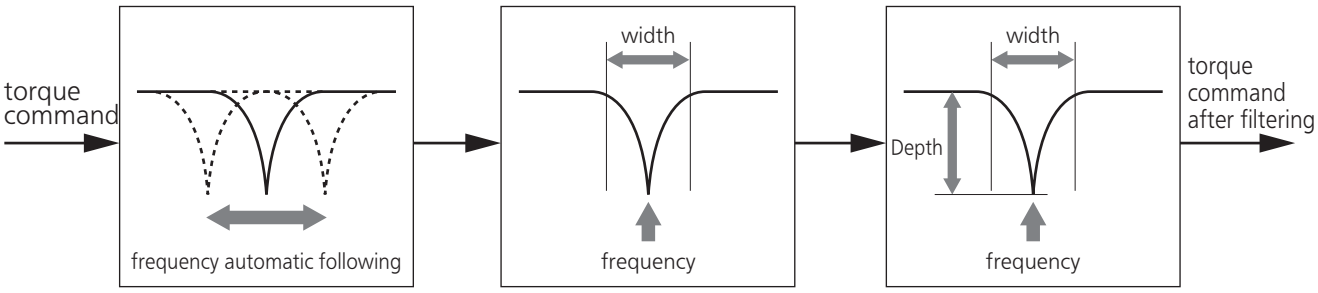

Adaptive filter

[Suppress resonance point instantaneously.]

1st notch filter

[Copying of the setup from the adaptive filter to 1st notch filter is enabled.]

2nd to 4th notch filter

[Adjustment of frequency, width and depth is enabled. (refer to P.5-39)]

Example of application machine

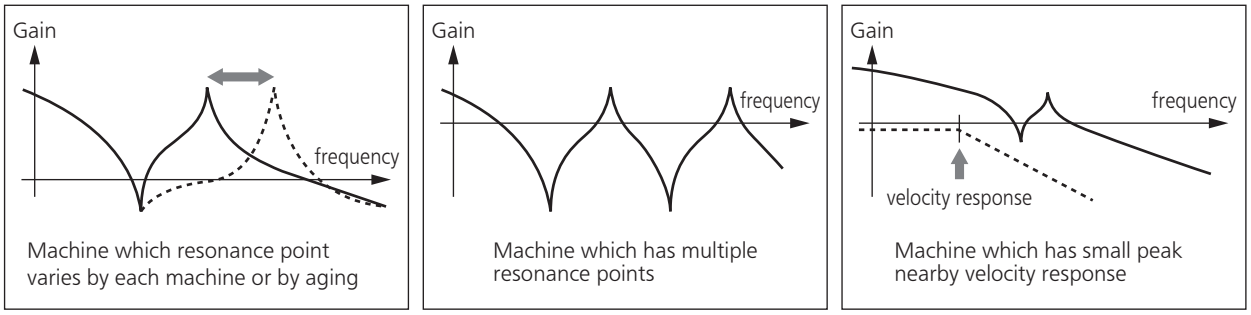

daptive filter enabled

Adaptive filter and notch filter enabled

Depth adjustment enabled

Related page • P.4-7 to P.4-87 “Details of parameter”

Notch width and depth

The width of the notch filter is the ratio of the width of −3dB attenuation frequency band with respect to the notch frequency at its center when depth is 0, and the value is as shown in the table below.
The notch filter depth indicates I:O ratio where the input at the center frequency is completely shut with setup value 0 but fully received with setup value 100. The table below shows this value in dB on the right.

Notch width	Band width/center frequency
	A6 series
0	0.25
1	0.3
2	0.35
3	0.42
4	0.5
5	0.59
6	0.71
7	0.84
8	1
9	1.19
10	1.41
11	1.68
12	2
13	2.38
14	2.83
15	3.36
16	4
17	4.76
18	5.66
19	6.73
20	8

Notch depth	I/O ratio	[dB]
0	0	−∞
1	0.01	−40
2	0.02	−34
3	0.03	−30.5
4	0.04	−28
5	0.05	−26
6	0.06	−24.4
7	0.07	−23.1
8	0.08	−21.9
9	0.09	−20.9
10	0.1	−20
15	0.15	−16.5
20	0.2	−14
25	0.25	−12
30	0.3	−10.5
35	0.35	−9.1
40	0.4	−8
45	0.45	−6.9
50	0.5	−6
60	0.6	−4.4
70	0.7	−3.1
80	0.8	−1.9
90	0.9	−0.9
100	1	0

Notch filter frequency characteristics

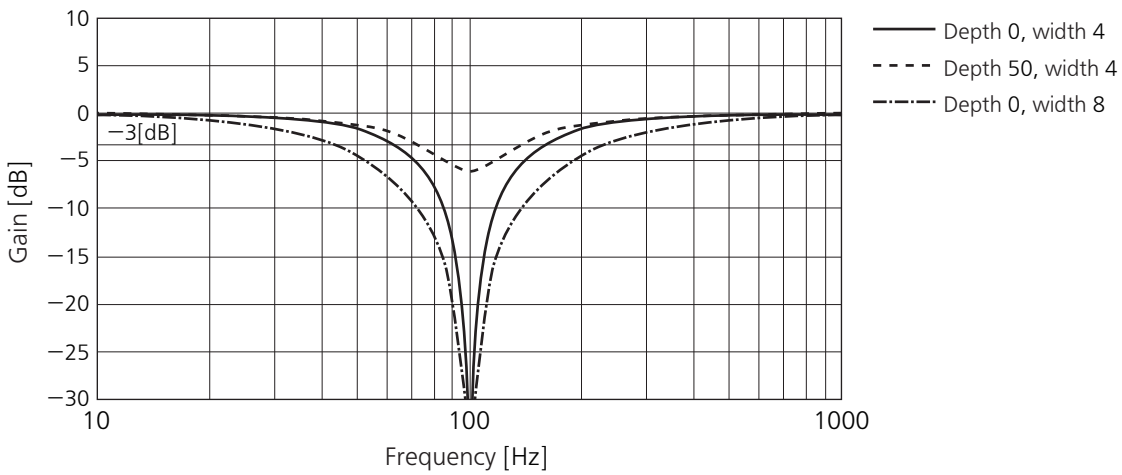

How to Check the Resonance Frequency of the Machine

(1) Start up the Setup Support Software, "PANATERM" and bring the frequency characteristics measurement screen.
(2) Set up the parameters and measurement conditions. (Following values are standard.)
- Set up Pr1.01 (1st gain of velocity loop) to 25 or so. (to lower the gain and make it easy to identify the resonance frequency)
- Set up the amplitude to 50 (r/min) or so. (not to saturate the torque)
- Make the offset to 100 (r/min) or so. (to increase the speed detecting data and to avoid the measurement error in the vicinity of speed-zero)
- Polarity is made positive direction with "+" and negative direction with "−".
- Setup the sampling rate to 0. (setup range to be 0 to 7.)

(3) Execute the frequency characteristic analysis.

Remarks
- Make sure that the revolution does not exceed the travel limit before the measurement.
  Standard revolutions are,
  Offset (r/min) × 0.017 × (sampling rate +1)
  Larger the offset, better measurement result you can obtain, however, revolutions may be increased.
- Set up Pr2.00 (Setup of adaptive filter mode) to 0 while you make measurement.

Note
- When you set a larger value of offset than the amplitude setup and make the motor run to the one direction at all time, you can obtain a better measurement result.
- Set up a smaller sampling rate when you measure a high frequency band, and a larger sampling rate when you measure a low frequency band in order to obtain a better measurement result.
- When you set a larger amplitude, you can obtain a better measurement result, but noise will be larger. Start a measurement from 50 [r/min] and gradually increase it.

Relation of Gain Adjustment and Machine Stiffness

In order to enhance the machine stiffness,
(1) Install the base of the machine firmly, and assemble them without looseness.
(2) Use a coupling designed exclusively for servo application with high stiffness.
(3) Use a wider timing belt. Belt tension to be within the permissible load to the motor shaft.
(4) Use a gear reducer with small backlash.
- Inherent vibration (resonance frequency) of the machine system has a large effect to the gain adjustment of the servo.
  You cannot setup a higher response of the servo system to the machine with a low resonance frequency (machine stiffness is low).

Note
Please download the Setup support software “PANATERM” from our web site anduse after install to the PC.
https://industry.panasonic.com/jp/ja/products/motor/fa-motor/ac-servo

Related page
- P.7-28 “Outline of Setup support software “PANATERM”

5. Manual Gain Tuning (Application)

Damping Control

Outline

This function reduces vibration at the edge or over the entire equipment by removing the vibration frequency components specified by the positional command. Among the four frequency settings, up to three can be used at the same time.

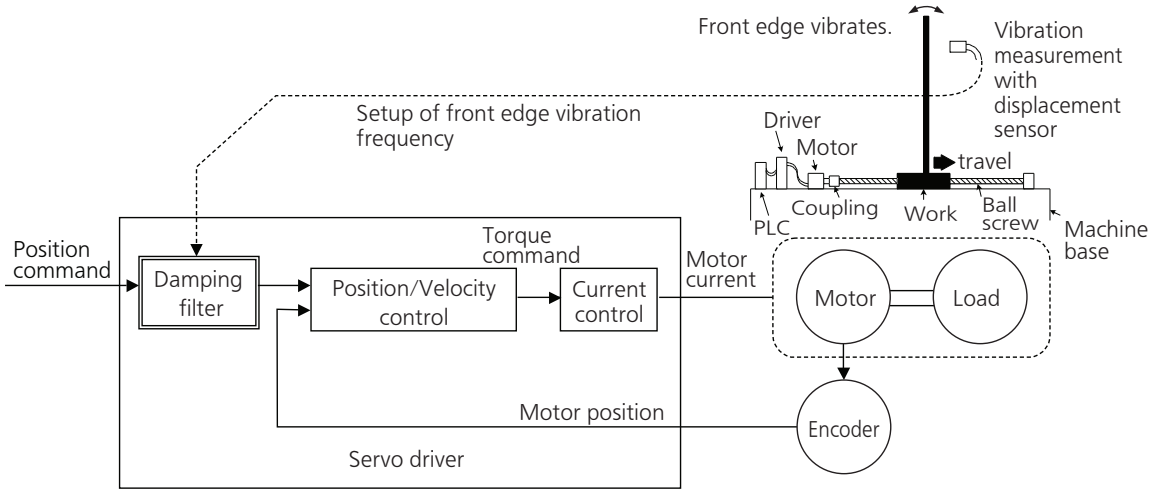

Applicable Range

This function can only be applicable when the following conditions are satisfied.

	Conditions under which the damping control is activated
Control mode	• Control mode to be either or both position control or/and full-closed control. Pr0.01 = 0 : Position control Pr0.01 = 3 : 1st control mode of position and velocity control Pr0.01 = 4 : 1st control mode of position control and torque control Pr0.01 = 6 : Full-closed control

Caution

This function does not work properly or no effect is obtained under the following conditions.

	Conditions which obstruct the damping control effect
Load condition	• Vibration is triggered by other factors than command (such as disturbance). • Ratio of resonance frequency and anti-resonance frequency is large. • Vibration frequency is out of the range of 1.0-300.0 [Hz].

Related page • P.4-7 to P.4-87 "Details of parameter" • P.7-28 "Outline of Setup support software "PANATERM"

How to Use

(1) Setup of damping frequency (1st: Pr2.14, 2nd: Pr2.16, 3rd: Pr2.18, 4th: Pr2.20)

Measure the vibration frequency at the top of the equipment. When you can use such instrument as a laser displacement meter to directly measure the top end vibration, read out the vibration frequency from the measured waveform in unit of 0.1[Hz] and set it to the parameter.

If no measuring device is available, measure the frequency based on the residual vibration of the position deviation waveform measured using the vibration frequency monitor or the waveform graphic function of the setup support software (PANATERM).

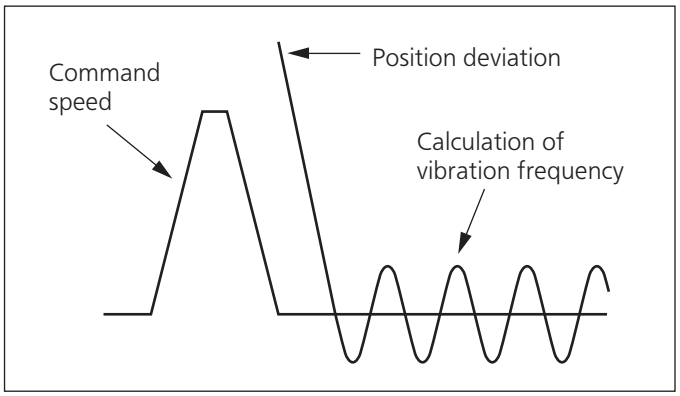

(2) Setup of damping filter (1st: Pr2.15, 2nd: Pr2.17, 3rd: Pr2.19, 4th: Pr2.21)

First set to 0 and check the torque waveform during operation.

Although you can reduce the settling time by specifying a larger value, the torque ripple increases at the command changing point as shown in the following figure. Set up a value within the range where no torque saturation occurs under the actual condition. If torque saturation occurs, the vibration suppression effect will be lost.

Caution

Setting range of the damping filter should be limited as follows:
10.0 Hz − damping frequency ≤ damping filter setting ≤ damping frequency

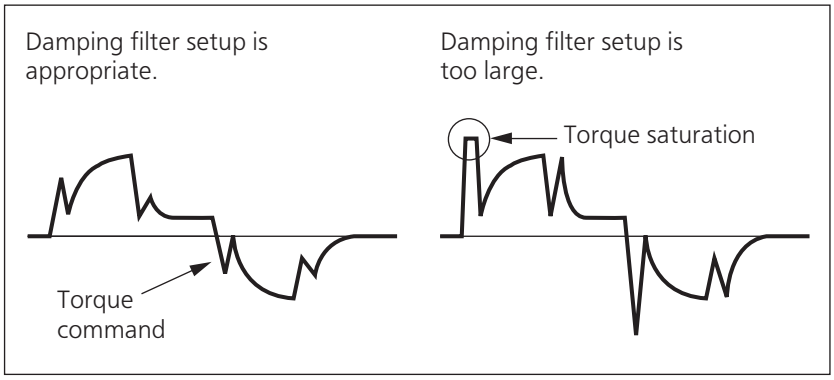

(3) Damping depth setting (Pr. 6.14, Pr. 6.60, Pr. 6.71, Pr. 6.72)
Damping width setting (Pr. 2.27, Pr. 2.28, Pr. 2.29, Pr. 2.30)
If further aims to vibration suppression, set optimum value that most vibration is redused by increase (shallow) depth setting value little by little from 0.
Also if reducing the control delay is desired, reduce (narrow) width setting. When support variation of vibration frequency, increase (widen) width setting.

(4) Setup of damping frequency (Pr2.13)

Based on damping condition of the unit,damping filter (1st to 4th) can be changed.

Setup value	VS-SEL2	VS-SEL1	1st damping	2nd damping	3rd damping	4th damping
[0]	—	—	○	○		
1	—	OFF	○		○	
	—	ON		○		○
2	OFF	OFF	○			
	OFF	ON		○		
	ON	OFF			○	
	ON	ON				○

Setup value	Position command direction	1st damping	2nd damping	3rd damping	4th damping
3	Positive direction	○		○	
	Negative direction		○		○

Caution

Switching of damping controls will be done on the rising edge of the command whose number of pulses/0.125 ms has been changed from 0 while the positioning complete signal is being output.

When the damping frequency is increased or disabled, and positioning complete range is large, and pulses are stored in the filter at that time (the area represented by the value of position command before filter subtracted by the value of position command after filter and integrated with the time). Note that since these pulses will be discharged at a higher rate upon switching to return back to the original position, the motor may run at a speed higher than the command speed for a short time.

5. Manual Gain Tuning (Application)

Model-type damping filter

Outline

This function reduces vibration at the edge or over the entire equipment by removing the vibration frequency components specified by the positional command.
The model-type damping filter can also remove resonance frequency components as well as anti-resonance frequency components, enhancing the effect of a conventional damping filter to generate smooth torque commands and offering a better damping effect.
In addition, the removal of anti-resonance frequency components and resonance frequency components can increase the responsiveness of the command response filter, which improves the settling time.
However, unlike a conventional damping filter, the model-type damping filter cannot obtain vibration components from the position sensor for the measurement of anti-resonance frequency components and resonance frequency components, which thus requires frequency characteristics analysis and the setting of optimum parameter values.

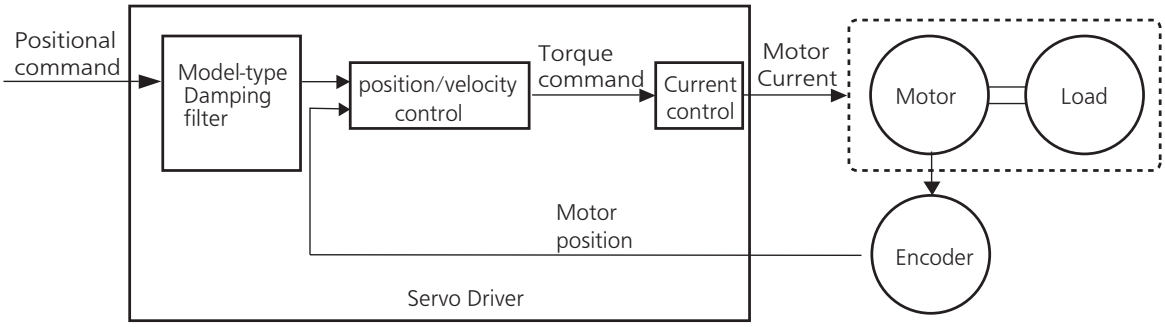

Applicable Range

This function can only be applicable when the following conditions are satisfied.

	Conditions under which the Model type resonance oppression notch filter is activated
Control mode	• Control mode to be Two-degree-of-freedom control position control.

Caution

This function does not work properly or no effect is obtained under the following conditions.

	Conditions which obstruct the Model type resonance oppression notch filter effect
Load condition	• Vibration is triggered by other factors than command (such as disturbance). • Resonance frequency and antiresonance frequency is out of the range of 5.0-300.0 [Hz].

Related page • P.4-7 to P.4-87 “Details of parameter” • P.7-28 “Outline of Setup support software “PANATERM”

Caution

In addition, Previous damping filter is used under the following conditions.

	Conditions of the previous damping filter
Parameter setting	• Resonance frequency and antiresonance frequency is the relation. 300.0[Hz] ≧ Resonance frequency >antiresonance frequency ≧ 5.0[Hz] • response frequency and antiresonance frequency is the relation. 300.0[Hz] ≧ antiresonance frequency*4 ≧ Resonance frequency ≧ antiresonance frequency ≧ 5.0[Hz] • By setting value of Pr2.13[Selection of damping filter switching] is equalto 4,it is effctive to make the 1st and the 2nd model type resonance oppression notch filter,in addition the 1st and the 2nd response frequency/antiresonance frequency ratio is out of the range of 8.(At this moment,the 2nd model type resonance oppression notch filter become the previous damping filter.)

When the damping filter works in a conventional manner, the three parameters of anti-resonance frequency, anti-resonance attenuation ratio and response frequency will be used for damping frequency, damping depth and damping filter setting.

To completely disable this function, all of the five parameters of resonance frequency, resonance attenuation ratio, anti-resonance frequency, anti-resonance attenuation ratio and response frequency should be set to 0.

How to Use

The determination of resonance frequency and anti-resonance frequency is the frequency characteristic analysis.Need to set the appropriate parameters.
Model-type damping filter is setted by Pr2.13.

Contents of setup values 4 to 6 will differ with enabled/disabled switching of two degree-of-freedom control mode.
Two degree-of-freedom control mode disabled,set the value as 0.

Pr2.13	VS-SEL1	1st model type damping	2nd model type damping
4	—	Enabled	Enabled
5	OFF	Enabled	Disabled
	ON	Disabled	Enabled

When set to 6:To be switched by command direction.

Pr2.13	Position command direction	1st model type damping	2nd model type damping
6	Positive direction	Enabled	Enabled
	Negative direction	Disabled	Enabled

Set up the model-type damping filter using the following parameters.

Class	No.	Parameter name	Function
6	61	1st resonance frequency	Defines the resonance frequency of the model-type damping filter's load. The unit is [0.1 Hz].
6	62	1st resonance damping ratio	Defines the resonance attenuation ratio of the model-type damping filter's load. The attenuation ratio can be set as the setup value multiplied by 0.001. The value of 1000 results in an attenuation of 1 (no peak). The smaller the setup value, the smaller the attenuation ratio (higher resonance peak).
6	63	1st anti-resonance frequency	Defines the anti-resonance frequency of the model-type damping filter's load. The unit is [0.1 Hz].
6	64	1st anti-resonance damping ratio	Defines the anti-resonance attenuation ratio of the model-type damping filter's load. The attenuation ratio can be set as the setup value multiplied by 0.001. The value of 1000 results in an attenuation of 1 (no peak). The smaller the setup value, the smaller the attenuation ratio (higher resonance peak).
6	65	1st response frequency	Defines the response frequency of the model-type damping filter's load. The unit is [0.1 Hz].
6	66	2nd resonance frequency	Defines the 2nd resonance frequency of the model-type damping filter's load. The unit is [0.1 Hz].
6	67	2nd resonance damping ratio	Defines the 2nd resonance attenuation ratio of the model-type damping filter's load. The attenuation ratio can be set as the setup value multiplied by 0.001. The value of 1000 results in an attenuation of 1 (no peak). The smaller the setup value, the smaller the attenuation ratio (higher resonance peak).
6	68	2nd anti-resonance frequency	Defines the 2nd anti-resonance frequency of the model-type damping filter's load. The unit is [0.1 Hz].
6	69	2nd anti-resonance damping ratio	Defines the 2nd anti-resonance attenuation ratio of the model-type damping filter's load. The attenuation ratio can be set as the setup value multiplied by 0.001. The value of 1000 results in an attenuation of 1 (no peak). The smaller the setup value, the smaller the attenuation ratio (higher resonance peak).
6	70	2nd response frequency	Defines the 2nd response frequency of the model-type damping filter's load. The unit is [0.1 Hz].

1) As preparation, measure the resonance frequency and anti-resonance frequency using the frequency characteristic measuring function of PANATERM with torque velocity mode.

   Ex.) The figure below shows the measurement result with a belt device. Ignoring small resonances, the resonance frequency at the gain peak and the anti-resonance frequency at the gain valley are as follows:

   1st resonance frequency = 130 [Hz], 1st anti-resonance frequency = 44 [Hz]

   2nd resonance frequency = 285 [Hz], 2nd anti-resonance frequency=180 [Hz]

2) The resonance attenuation ratio and anti-resonance attenuation ratio should have initial values of around 50 (0.050).
3) The response frequency should start with the same value as the anti-resonance frequency.
4) Specify a value of 4 to 6 in Pr. 2.13 “Damping filter switching selection” to enable model-type damping control.
5) Activate the motor and fine tune the parameters in the following sequence so that vibration components including command position deviation become small.
   (1) Anti-resonance frequency
   (2) Anti-resonance attenuation ratio
   (3) Resonance frequency
   (4) Resonance attenuation ratio
6) Once the setting where vibration is minimized was found, increase the setup value of response frequency. The response frequency increases from one to four times the anti-resonance frequency, and the higher the frequency, the smaller the delay due to damping control. However, the damping effect decreases gradually, so a balanced setting should be chosen.

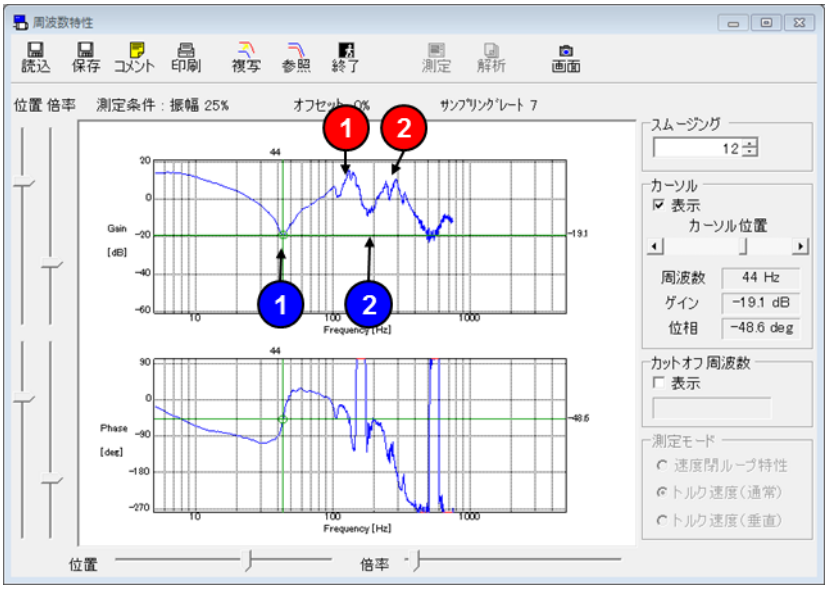

Example of frequency characteristic measurement with setup support software PANATERM

5. Manual Gain Tuning (Application)

Feed forward function

Outline

When position control or full closed control is used, positional deviation can be further reduced when compared with deviation where control is made only by feedback, and response is also improved, by calculating the velocity control command necessary for operation based on the internal positional command, and by adding velocity feed forward to the speed command calculated by comparison with position feedback.
The response time of the velocity control system is also improved by calculating torque command necessary for operation based on the velocity control command and by adding torque feed forward calculated by comparison with velocity feedback to the torque command.

Related Parameter

For A6 series, the velocity feed forward and torque feed forward can be used.

Class	No.	Title	Function
1	10	Velocity feed forward gain	Multiply the velocity control command calculated according to the internal positional command by the ratio of this parameter and add the result to the speed command resulting from the positional control process.
1	11	Velocity feed forward filter	Set the time constant of 1st delay filter which affects the input of velocity feed forward.
1	12	Torque feed forward gain	Multiply the torque command calculated according to the velocity control command by the ratio of this parameter and add the result to the torque command resulting from the velocity control process.
1	13	Torque feed forward filter	Set up the time constant of 1st delay filter which affects the input of torque feed forward.
6	0	Analog torque feed forward conversion gain	Set the input gain of analog torque feed forward. 0 to 9 are invalid.
6	10	Function expansion setup	Set up the function in unit of bit. bit5 0: Analog torque feed forward is invalid. 1: Analog torque feed forward is Valid. * bit 0 = LSB

Usage example of velocity feed forward

The velocity feed forward will become effective as the velocity feed forward gain is gradually increased with the velocity feed forward filter set at approx. 50 (0.5 ms). The positional deviation during operation at a constant velocity is reduced as shown in the equation below in proportion to the value of velocity feed forward gain.

Positional deviation [unit of command] = command speed [unit of command/s] / positional loop gain [1/s] × (100 - velocity feed forward gain [%]) / 100

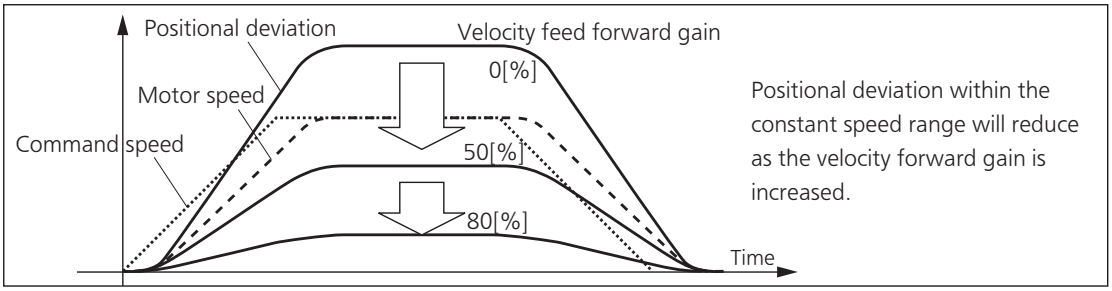

With the gain set at 100 %, calculatory positional deviation is 0, but significant overshoot occurs during acceleration/deceleration.
If the updating cycle of the positional command input is longer than the driver control cycle, or the pulse frequency varies, the operating noise may increase while the velocity feed forward is active. If this is the case, use positional command filter (1st delay or FIR smoothing), or increase the velocity forward filter setup value.

Usage example of torque feed forward

- To use the torque feed forward, correctly set the inertia ratio.
  Use the value that was determined at the start of the real time auto tuning, or set the inertia ratio that can be calculated from the machine specification to Pr0.04 Inertia ratio.
- The torque feed forward will become effective as the torque feed forward gain is gradually increased with the torque feed forward filter is set at approx. 50 (0.5 ms).
- Positional deviation at a constant acceleration/deceleration can be minimized close to 0 by increasing the torque forward gain. This means that positional deviation can be maintained at near 0 over entire operation range while driving in trapezoidal speed pattern under ideal condition where disturbance torque is not active .

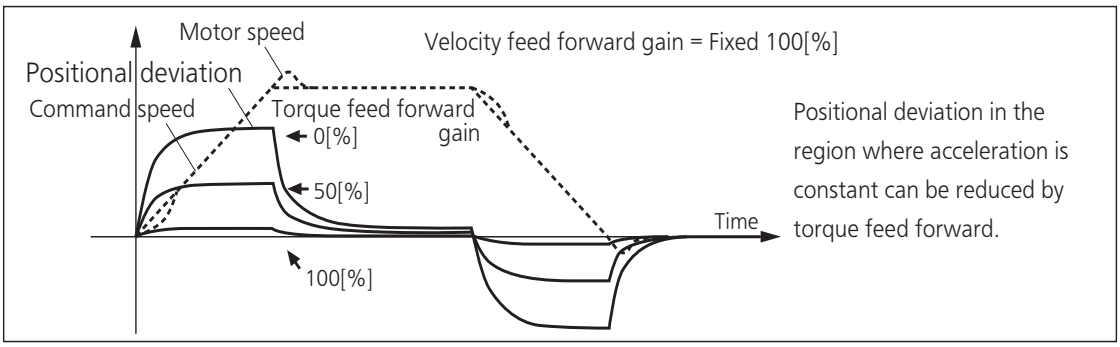

Zero positional deviation is impossible in actual situation because of disturbance torque. As with the velocity feed forward, large torque feed forward filter time constant decreases the operating noise but increases positional deviation at acceleration change point.

Usage example of analog torque feed forward

Setting bit 5 place of Pr6.10 Function expansion setup to 1 enables the analog torque feed forward. When the analog input 3 is used by another function (e.g. analog torque limit), the function becomes invalid.
The voltage (V) applied to the analog input 3 is converted to the torque via Pr6.00 Analog torque feed forward conversion gain setup and added to the torque command (%): in CCW direction if it is positive voltage or in CW direction if negative.
The voltage (V) applied to the analog input 3 is converted to the motor torque command (%) through the process as shown in the graph below.
The slope represents when Pr6.00 = 30. The slope changes as the setup value changes.

Torque command (%) = 100 × input voltage (V) / (Pr6.00 setup value × 0.1)

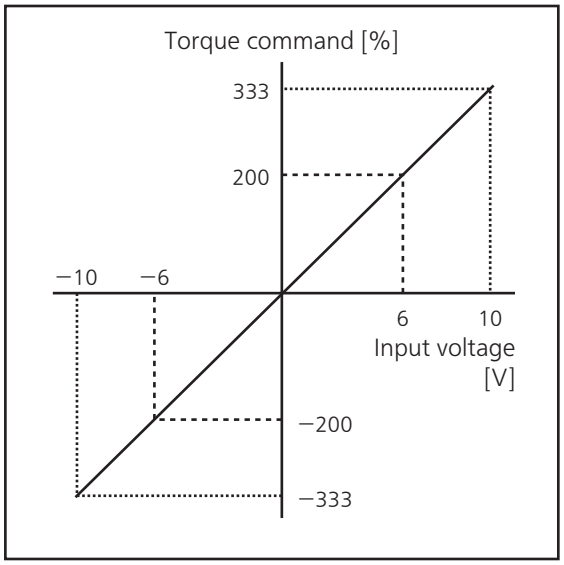

Related page • P.4-7 to P.4-87 “Details of parameter”

5. Manual Gain Tuning (Application)

Load variation suppression function

Outline

This function uses the disturbance torque determined by the disturbance observer to reduce effect of disturbance torque and vibration.
To cope with the real-time auto-tuning is useful when there is a change of load.

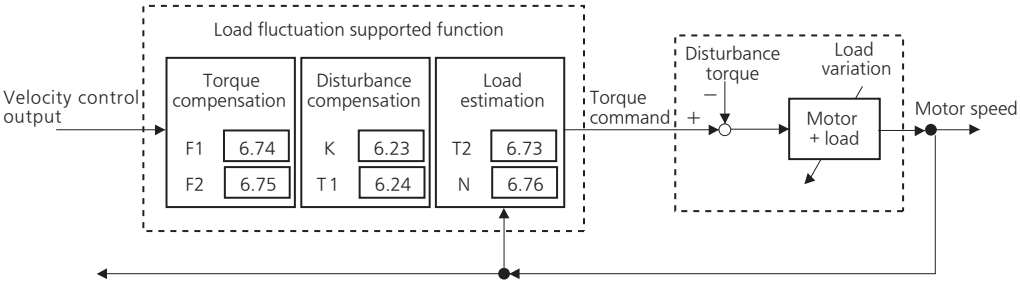

Applicable Range

This function can be applicable only when the following conditions are satisfied.

	Conditions under which the disturbance observer is activated
Control mode	• Should be either position control, velocity control, or full-closed control.
Others	• Should be in servo-on condition • Elements other than control parameters, such as deviation counter clear command inhibit and torque limit, are appropriately set, enabling the motor to run normally. • Real-time automatic tuning is invalid. (Pr0.02=0)

Caution

Effect may not be expected in the following condition.

	Conditions which obstruct disturbance observer action
Load	• The rigidity is low (the anti-resonance point is at low frequency range of 10 Hz or below). • The load shows a clear non-linear trend with friction and backlash.

Related page • P.4-7 to P.4-87 “Details of parameter”

Related Parameterctuation

Class	No.	Title	Function
6	10	Function expansion setup	Enables or disables the load variation suppression function. bit1 0: Disables the load variation suppression function 1: Enables the load variation suppression function bit2 0:Disables the load variation stabilization setting 1: Enables the load variation stabilization setting bit14 0: Disables the load variation suppression function automatic adjustment 1: Enables the load variation suppression function automatic adjustment * The least significant bit is bit0
6	23	Load variation compensation gain	Defines the compensation gain against load variation.
6	24	Load variation compensation filter	Defines the filter time constant against load variation.
6	73	Load estimation filter	Defines the filter time constant for load estimation.
6	74	Torque compensating frequency 1	Defines the filter frequency 1 against the velocity control output. Torque compensation is enabled when the relation between Pr. 6.74 "Torque compensation frequency 1" and Pr. 6.75 "Torque compensation frequency 2" satisfies the following formula. (Pr. 6.75 x 32) ⩾ Pr. 6.74 > Pr. 6.75 ⩾ 1.0 Hz
6	75	Torque compensating frequency 2	Defines the filter frequency 2 against the velocity control output. Torque compensation is enabled when the relation between Pr. 6.74 "Torque compensation frequency 1" and Pr. 6.75 "Torque compensation frequency 2" satisfies the following formula. (Pr. 6.75 x 32) ⩾ Pr. 6.74 > Pr. 6.75 ⩾ 1.0 Hz
6	76	Load estimation count	Defines the load estimation count.

How to Use

There are two methods below for adjusting the load variation suppression function.

■ When there is no load inertia variation (disturbance suppression setting)

1) Make normal gain adjustment in advance.
   Use real-time auto tuning (Pr 0.02=1) with the load variation suppression function automatic adjustment disabled (Pr 6.10 bit14=0), and set stiffness (Pr 0.03) as high as possible.
2) Set bit14 to 1 in Pr 6.10 "Function expansion setting" to enable the load variation suppression function automatic adjustment, and check disturbance suppression effect with the motor rotate.
   *Before enabling or disabling the load variation suppression function, turn off the servo first.
   *If this change causes the motor to oscillate or generates an abnormal sound, return to Step [1] and decrease the servo rigidity by one or two levels before repeating the subsequent steps.
3) If further aims to adjust, set bit14 to 0 in Pr 6.10 to disable the automatic adjustment of load variation suppression function.
4) Specify a small value as possible in Pr 6.24 "Load variation compensation filter." Decreasing the filter setup value within the range that does not produce any significant abnormal sound or torque command variation will improve disturbance suppression performance and reduce motor velocity variation and encoder position deviation.
   *When an abnormal sound at high frequency (1 kHz or above) is generated, increase the value in Pr 6.76 "Load estimation count."
   *When vibration at low frequency (10 Hz or below) is produced after operation stops, increase the value in Pr 6.23 "Load variation compensation gain" .
   *No change is required for Pr 6.73 "Load estimation filter" in normal cases, but you can set the optimum point by fine-tuning within the range between around 0.00 and 0.20 ms.

■ When there is load inertia variation (load variation stabilization setting)

1) Turn ON the control power in two-degree-of-freedom position control (synchronization type) (Pr 0.01=0, Pr 6.47 bit0=1 bit3=1).
2) Set the command response filter (Pr 2.22) to 10ms.
3) Set real-time auto tuning to load variation support mode, and operate the motor in a pattern as large as possible load variation occurs in this state.
4) Set the stiffness setting (Pr 0.03) as large as possible.
5) Set the command response filter to appropriate value to continue to derease while checking response of the motor. (*In case of need to the multi-axis trajectory control, change all axes Pr 2.22 to the same value and adjust.)

5. Manual Gain Tuning (Application)

3rd gain switching function

Outline

In addition to the normal gain switching function described on P.5-34, 3rd gain switching function can be set to increase the gain just before stopping. The higher gain shortens positioning adjusting time.

Applicable Range

This function can be applicable only when the following conditions are satisfied.

	Conditions under which the 3rd gain switching function is activated
Control mode	• Control mode to be either or both position control or full-closed control.
Others	• Should be in servo-on condition • Input signals such as the deviation counter clear and command input inhibit, and parameters except for controls such as torque limit setup, are correctly set, assuring that the motor can run smoothly.

Related Parameter

Class	No.	Title	Function
6	5	Position 3rd gain valid time	Set up the time at which 3rd gain becomes valid.
6	6	Position 3rd gain scale factor	Set up the 3rd gain by a multiplying factor of the 1st gain: 3rd gain = 1st gain × Pr6.06/100

Related page • P.4-7 to P.4-87 “Details of parameter”

How to Use

While in the condition under which the normal gain switching functions, set the 3rd gain application time to Pr6.05 Position 3rd gain enable time, and set the 3rd gain (scale factor with reference to 1st gain) to Pr6.06 Position 3rd gain magnification ratio.

- If 3rd gain is not used, set Pr6.05 to 0 and Pr6.06 to 100.
- The 3rd gain is enabled only for position control or full closed control.
- During the 3rd gain period, only position loop gain/speed proportional gain becomes 3rd gain, during other periods, 1st gain setting is used.
- When the 2nd gain switching condition is established during 3rd gain period, 2nd gain is used.
- During transition from 2nd gain to 3rd gain, Pr1.19 Position gain switching time is applied.

Caution When the gain is switched from 2nd to 1st by the change in parameter, the 3rd gain period appears.

Example)
Pr1.15 Position control switching mode = 7 switching condition: with positional command:

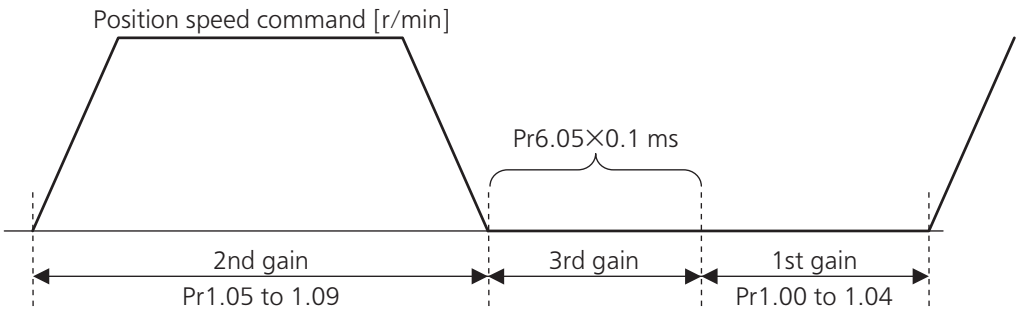

[3rd gain period]
Position loop gain = Pr1.00 × Pr6.06/100
Speed proportional gain = Pr1.01 × Pr6.06/100
Time constant of velocity integration, speed detection filter and torque filter directly use the 1st gain value.

5. Manual Gain Tuning (Application)

Friction torque compensation

Outline

To reduce effect of friction represented by mechanical system, 2 types of friction torque compensation can be applied: offset load compensation that cancels constant offset torque and the dynamic friction compensation that varies direction as the operating direction varies.

Applicable Range

This function can be applicable only when the following conditions are satisfied.

	Conditions under which the Friction torque compensation is activated
Control mode	• Specific to individual functions. Refer to "Related parameters" shown below.
Others	• Should be in servo-on condition • Input signals such as the deviation counter clear and command input inhibit, and parameters except for controls such as torque limit setup, are correctly set, assuring that the motor can run smoothly.

Related Parameter

Combine the following 4 parameters to setup appropriate friction torque compensation.

Class	No.	Title	Function
6	7	Torque command additional value	Set up the offset load compensation value usually added to the torque command in a control mode except for the torque control mode.
6	8	Positive direction torque compensation value	Set up the dynamic friction compensation value to be added to the torque command when forward positional command is fed.
6	9	Negative direction torque compensation value	Set up the dynamic friction compensation value to be added to the torque command when negative direction positional command is fed.
6	50	Viscous friction compensating gain	When the 2 degree of freedom control mode is active, the product of the instruction speed and the setting value is used as the friction torque compensation and the torque command is added to the torque. By setting the value of the viscous friction coefficient estimation of real-time auto-tuning,it can improve the feedback scale position deviation of the settling area.

Related page • P.4-7 to P.4-87 “Details of parameter”

How to Use

The friction torque compensation will be added in response to the entered positional command direction as shown below.

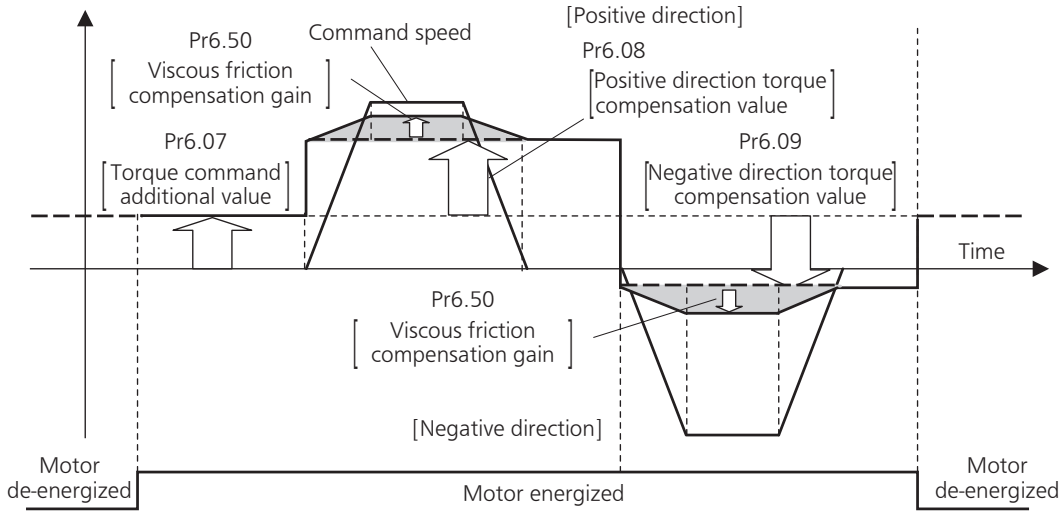

The friction compensation torque is the sum of the offset load compensation value which is set according to the torque command additional value (always constant) and the dynamic friction compensation torque which is set according to positive/negative direction torque compensation value.
The command speed direction is reset upon power-up or when the motor is de-energized.

- Pr6.07 [Torque command additional value] reduces variations in positioning operation (performance is affected by direction of movement). These variations occur when constant offset torque resulting from weight on vertical axis is applied to the motor.
- Certain loads such as belt driven shaft requires high dynamic friction torque, which lengthens positioning setting time or varies positioning accuracy. These problems can be minimized by setting the friction torque of every rotating direction into individual parameters. Pr6.08 [Positive direction torque compensation value] and Pr6.09 [Negative direction torque compensation value] can be used for this purpose.

Caution The offset load compensation and dynamic friction compensation can be used individually or in combination. However, some control modes impose limit on application.

- For torque control: Offset load compensation and dynamic friction compensation are set at 0 regardless of parameter setting.
- For velocity control with servo-off: Offset load compensation per Pr6.07 is enabled. Dynamic friction compensation is set at 0 regardless of parameter setting.
- For position control or full closed control with servo-on: Previous offset load compensation and dynamic friction compensation values are maintained until the first positional command is applied where the offset load compensation value is updated according to Pr6.07. The dynamic friction compensation value is updated to parameters Pr.6.08 and Pr6.09 depending on command direction.

5. Manual Gain Tuning (Application)

Inertia ratio switching function

Outline

Inertia ratio can be switched between No.1 and No.2 by the switching input (J-SEL). This feature is useful in application where the load inertia changes in two steps.

Applicable Range

This function can be applicable only when the following conditions are satisfied.

	Conditions under which the Inertia ratio switching function is activated
Control mode	• Can be used in all control modes. Pr0.01 = 0 : Position control Pr0.01 = 1 : Velocity control Pr0.01 = 2 : Torque control Pr0.01 = 3 : Position/Velocity control Pr0.01 = 4 : Position/Torque control Pr0.01 = 5 : Velocity/Torque control Pr0.01 = 6 : Full-closed control
Others	• Should be in servo-on condition • Input signals such as the deviation counter clear and command input inhibit, and parameters except for controls such as torque limit setup, are correctly set, assuring that the motor can run smoothly. • Real-time auto-tuning should be disabled. (Pr0.02=0) • Adaptive filter should be disabled. (Pr2.00=0) • Instantaneous speed observer should be disabled. (Pr6.10 bit0=0) • Disturbance observer should be disabled. (Pr6.24=0 bit1=0)

Caution

- Be sure to change the inertia ratio while the motor is in stop state. Otherwise, vibration or oscillation will occur.
- If the difference between the 1st inertia ratio and 2nd inertia ratio is large, vibration, etc., may occur even in stop mode. These potential problems should be identified on the actual model.

Related page • P.3-34 “Inputs and outputs on connector X4” • P.4-7 to P.4-87... “Details of parameter”

Related Parameter

Combine the following 3 parameters to setup appropriate inertia ratio switching function.

Class	No.	Title	Function
6	10	Function expansion setup	Sets bits related to inertia ratio switching function. bit1 0: Invalid 1: Valid bit2 0: Always valid 1: Valid only when 1st gain is selected. * bit 0 = LSB Example) To enable inertial ratio switching Setup value = 8
0	04	Inertia ratio	Set 1st inertia ratio. You can set up the ratio of the load inertia against the rotor (of the motor) inertia.
6	13	2nd Inertia ratio	Set 2nd inertia ratio. You can set up the ratio of the load inertia against the rotor (of the motor) inertia.

How to Use

- Select 1st inertia ratio or 2nd inertia ratio according to the inertia ratio select input (J-SEL).

Inertia ratio switching input (J-SEL)	Applicable inertia ratio
OFF	1st Inertia ratio (Pr0.04)
ON	2nd Inertia ratio (Pr6.13)

5. Manual Gain Tuning (Application)

Hybrid vibration damping function

Outline

This function suppresses vibration due to amount of twist between the motor and load in the full closed control mode. This function enables high gain setting.

Applicable range

This function can be applicable only when the following conditions are satisfied.

	Conditions under which the Hybrid vibration damping function is activated
Control mode	• Full-closed control mode
Others	• Should be in servo-on condition • Input signals such as the deviation counter clear and command input inhibit, and parameters except for controls such as torque limit setup, are correctly set, assuring that the motor can run smoothly.

Caution

The effect of this function will be proportional to the amount of twist between the motor and load.

Related Parameter

Class	No.	Title	Function
6	34	Hybrid vibration suppression gain	Set up the hybrid vibration suppression gain for full-closed controlling. First set it to the value identical to that of poison loop gain, and then fine tune as necessary.
6	35	Hybrid vibration suppression filter	Set up the time constant of the hybrid vibration suppression filter for full-closed controlling.

How to Use

[1] Set Pr6.34 Hybrid vibration suppression gain to the value equal to that of positional loop gain.
[2] Driving under full closed control, gradually increase the setup value of Pr6.35 Hybrid vibration suppression filter while checking response change.
When the response is improved, adjust Pr6.34 and Pr6.35 to determine the combination that provides the best response.

Related page • P.4-7 to P.4-87 “Details of parameter”

5. Manual Gain Tuning (Application)

Quadrant projection suppression function

Outline

Control configuration can be switched to suppress quadrant projection occurring during arc interpolation of 2 or more axes. To be used in conjunction with load fluctuation suppression function.

Applicable range

This function can be applicable only when the following conditions are satisfied.

	Conditions under which the Hybrid vibration damping function is activated
Control mode	• To be in either position control or full close control mode
Others	• Should be in servo-on condition • Elements other than control parameters, such as prohibition of deviation counter clear command input and torque limit, etc. are set appropriately, in a state where there are no obstructions in normal motor revolutions.

Caution

There are cases where effects cannot be observed under the following conditions.

	Conditions which obstruct disturbance observer action
Load	• When rigidity is low (anti-resonance point exists in the low frequency range of 10 Hz or lower). • When non-linearity of load is strong from existence of backlash, etc. • When action patterns are changed.

Related Parameter

Class	No.	Title	Function
5	45	Quadrant projection positive direction compensation amount	Sets amount of compensation to be added to torque command when the position command is in positive direction and quadrant projection compensation function is enabled.
5	46	Quadrant projection negative direction compensation amount	Sets amount of compensation to be added to torque command when the position command is in negative direction and quadrant projection compensation function is enabled.
5	47	Quadrant projection compensation delay time	Sets the length of delay time for switching of amount of compensation after position command has been reversed, when quadrant projection compensation function is enabled.
5	48	Quadrant projection compensation filter setting L	Sets time constant for low-pass filter on the amount of compensation on torque command when quadrant projection compensation function is enabled.
5	49	Quadrant projection compensation filter setting H	Sets time constant for high-pass filter on the amount of compensation on torque command when quadrant projection compensation function is enabled.

Related page • P.4-7 to P.4-87 “Details of parameter”

Related Parameter

Class	No.	Title	Function
6	47	Function expansion setting 2	bit14: Enables/disables quadrant projection compensation function. (0: disabled, 1: enabled)
6	97	Function expansion setting 3	bit 0 : Enables/disables quadrant projection compensation function. (0: disabled, 1: enabled) * Please set to 1 to set the amount of quadrant projection compensation for each reversed direction when traveling direction is reversed.

How to Use

Load fluctuation suppression function is adjusted through disturbance suppression setting to measure quadrant projection.
If the level is unsatisfactory, fine adjustment can be conducted using the quadrant projection suppression function.

1) Reclose control power supply after enabling quadrant projection suppression function (Pr 6.47 bit14 = 1)
2) Set initial values to: Pr 5.47 = 0, Pr 5.48 = Pr 1.04, Pr 5.49 =0.
3) Measure the magnitude of quadrant projection and conduct fine adjustments to Pr 5.45 and Pr 5.46 of each axis.

* In case of delay in quadrant projection from travelling direction reversing timing, try changing Pr 5.47 and Pr5.48.
* To set the amount of quadrant projection compensation to the revised direction when the traveling direction is reversed, try chanting Pr6.97 bit 0 to 1 and changing Pr 5.49.

5. Manual Gain Tuning (Application)

Two-degree-of-freedom control mode (Position control mode)

Outline

In the two-degree-of-freedom control mode, command response and servo rigidity can be independently set with improved responsiveness. This mode has enhanced position control functions.

Applicable Range

This function can be applicable only when the following condition are satisfied.

	Conditions under which the Two-degree-of-freedom control mode is activated.
Control Mode	Position control
Others	• Should be servo-on condition. • Factors other than control parameters such as torque limit should be properly setup, allowing motor to operate normally.

Related Parameter

First, set Pr6.47 Function expansion setup 2 to 1 and write the setting to EEPROM. Reset the control power supply to enable the two-degree-of-freedom control mode. Adjust the gain by using the real-time auto-tuning (refer to P.5-11). If further improvement is necessary, manually fine tune the following parameters while checking the response.

Class	No.	Title	Function
6	47	Function expansion settings 2	Set up various functions bit by bit. bit 0 Two-degree-of-freedom control mode 0: Invalid 1: Valid bit 3 Two-degree-of-freedom control real-time auto-tuning select 0: Position control type 1: Synchronous type *The least significant bit is represented by bit0. *For bit3 (two-degree-of-freedom control real time auto tuning select): this is made usable when bit0 is at 1 (valid).
2	22	First order filter time constant for command	While the two-degree-of-freedom control real-time auto-tuning is selected, time constant of command filter is applied with the maximum value limited to 2000 (= 200.0 ms). (The value of the parameter is not limited but the value to be applied to driver is limited. Set attenuation term in Pr6.49 [Set attenuation term of command filter/adjustment filter].) Decreasing the value of this parameter makes command response fast and large, resulting smooth command response.

(continued)

Related page • P.4-7 to P.4-87 "Details of parameter"

Class	No.	Title	Function
6	48	Adjust filter	Sets time constant of adjustment filter. When the torque filter setting is changed, set the parameter to a value close to real-time auto-tuning setting. Fine adjustment by checking positional deviation of the encoder near setting point may improve overshoot or oscillatory waveform.
6	49	Adjust/ Torque command attenuation term	Sets attenuation term of command filter and adjustment filter. Decimal notation: 1st digit sets command filter and 2nd digit sets adjustment filter. Value of digit 0 to 4: Without attenuation term (functions as 1st filter). Value of digit 5 to 9: The 2nd filter (attenuation term ξ is 1.0, 0.86, 0.71, 0.50 and 0.35, in that order). <Example> To set command filter ξ = 1.0, adjustment filter 1 ξ = 0.71: Setup value = 75 1st digit = 5 (ξ = 1.0), 2nd digit = 7 (ξ = 0.71) Pr2.22 Command smoothing filter is applied as time constant of command filter.
6	50	Viscous friction compensation gain	Adds the result of command speed multiplied by this setup value to torque command as viscous friction torque correction value. By setting the estimate value of viscous friction coefficient of real-time auto-tuning, encoder positional deviation near the setting point may be improved.

5. Manual Gain Tuning (Application)

Two-degree-of-freedom control mode (Velocity control mode)

Outline

In the two-degree-of-freedom control mode, command response and servo rigidity can be independently set with improved responsiveness. This mode has enhanced speed control functions.

Applicable Range

This function can be applicable only when the following condition are satisfied.

	Conditions under which the Two-degree-of-freedom control mode is activated.
Control Mode	Speed control
Others	• Should be servo-on condition. • Factors other than control parameters such as torque limit should be properly setup, allowing motor to operate normally.

Related Parameter

First, set Pr6.47 Function expansion setup 2 to 1 and write the setting to EEPROM. Reset the control power supply to enable the two-degree-of-freedom control mode. Adjust the gain by using the real-time auto-tuning (refer to P.5-11). If further improvement is necessary, manually fine tune the following parameters while checking the response.

Class	No.	Title	Function
6	47	Function expansion settings 2	Set up various functions bit by bit. bit 0 Two-degree-of-freedom control mode 0: Invalid 1: Valid bit 3 Two-degree-of-freedom control real-time auto-tuning select Please set fixed to 0 (position control type) *The least significant bit is represented by bit 0.
2	22	First order filter time constant for command	While the two-degree-of-freedom control real-time auto-tuning is selected, time constant of command filter is applied with the maximum value limited to 640 (= 64.0 ms). (The value of the parameter is not limited but the value to be applied to driver is limited.) Decreasing the value of this parameter makes command response fast and large, resulting smooth command response.
6	48	Adjust filter	To set the time constant of adjustment filter. When the torque filter setting is changed, set the adjustment filter to a near value while referring to setting of real-time auto-tuning. In addition, by finely adjusting the adjustment filter while monitoring the encoder position deviation in the vicinity of steady state, overshoot or vibration waveforms may be sometimes improved.

Related page • P.4-7 to P.4-87 "Details of parameter"

5. Manual Gain Tuning (Application)

Two-degree-of-freedom control mode (full-close control)

Outline

The two degree-of-freedom control mode is an extended function of full-close control mode to improve the responsiveness by making it possible to independently set the command response and servo rigidity.

Applicable Range

This function can be applicable only when the following condition are satisfied.

	Conditions under which the Two-degree-of-freedom control mode is activated.
Control Mode	• Full-close control
Others	• Should be servo-on condition. • Elements other than control parameters, such as torque limit, etc. are properly set and the motor is free of obstacle to normal motor rotation.

Related Parameter

First of all, with Pr6.47 write “Function expansion setting 2” = 1 into EEPROM, and then, make the two degree-of-freedom control mode enabled by resetting the control power supply.

Thereafter, adjust by the real-time auto-tuning (refer to P.5-11). Only when further improvement is required, finely adjust the following parameters manually while checking the responses.

Class	No.	Title	Function
6	47	Function expansion settings 2	Set up various functions bit by bit. bit 0 Two-degree-of-freedom control mode 0: Invalid 1: Valid bit 3 Two-degree-of-freedom control real-time auto-tuning select Please set fixed to 0 (position control type) *The least significant bit is represented by bit 0.
2	22	First order filter time constant for command	While the two-degree-of-freedom control real-time auto-tuning is selected, time constant of command filter is applied with the maximum value limited to 640 (= 64.0 ms). (The value of the parameter is not limited but the value to be applied to driver is limited.) Decreasing the value of this parameter makes command response fast and large, resulting smooth command response.
6	48	Adjust filter	Sets time constant of adjustment filter. When the torque filter setting is changed, set the parameter to a value close to real-time auto-tuning setting. Fine adjustment by checking positional deviation of the encoder near setting point may improve overshoot or oscillatory waveform.

Related Parameter

Class	No.	Title	Function
6	49	Command response filter / adjustment filter damping term setting	Sets the damping term of command response filter and adjustment filter. In the decimal number system, the first digit indicates the command response filter setting and the second digit the adjustment filter setting. Target digits: 0-4: No damping term (operates as a primary filter). 5-9: Secondary filter (damping term ξ becomes 1.0, 0.86, 0.71, 0.50, and 0.35 in sequence). However, when Pr 2.13 "Damping filter switching select" is 4 (when two of model type damping controls are valid), the damping ratio is fixed to 1.0 when the secondary filter is chosen. Ex.) In the event that you want to have ξ = 1.0 for the command response filter and ξ = 0.71 for the adjustment filter 1, the setting value is 75 (5 for the first digit (ξ = 1.0) and 7 for the second digit (ξ = 0.71)). Pr 2.22 "Command smoothing filter" is applied for the time constant of command response filter,
6	50	Viscosity friction compensation gain	Adds the result of multiplying the command speed by this setting to the torque command as the viscous friction torque compensation value. Setting the estimated value of viscous friction coefficient of real time auto-tuning may sometimes improve the encoder position deviation near the steady state.

5. Manual Gain Tuning (Application)

Two-stage torque filter

Outline

In addition to existing 1st and 2nd torque filter (Pr1.04 and Pr1.09), the 3rd torque filter can be set. This 2-stage torque filter will effectively suppress oscillating component in high frequency range.

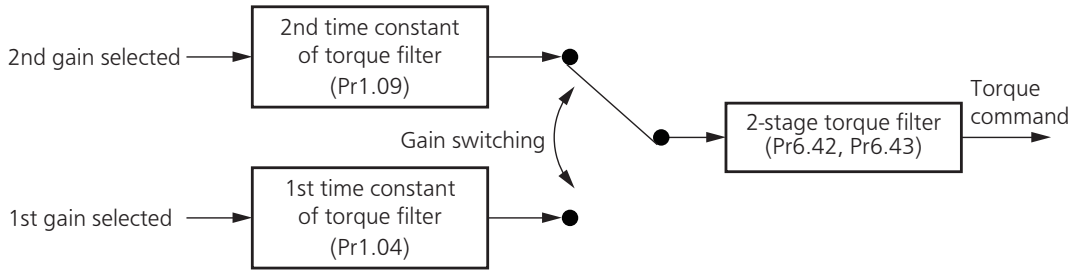

Applicable Range

This function can be applicable only when the following condition are satisfied.

	2-stage torque filter operating condition
Control Mode	Can be used in any control mode.
Others	• Should be servo-on condition. • Factors other than control parameters such as torque limit should be properly setup, allowing motor to operate normally.

Caution

- Excessively high setup value makes control unstable and may cause oscillation.
- Set to an appropriate value by checking condition of the device.
- Changing Pr6.43 2-stage torque filter attenuation term during operation may cause oscillation. Stop operation before changing the term.

Related page • P.4-7 to P.4-87 “Details of parameter”

Related Parameter

Class	No.	Title	Function
6	42	Two-stage torque filter time constant	Sets time constant of 2-stage torque filter. Setup value 0: invalid [When using in 2nd filter with Pr6.43 ⩾ 50] Compatible time constant range is 4 to 159 (0.04 ms to 1.59 ms) (corresponding frequency range: 100 Hz to 4000 Hz) Setup values 1 to 3 function as 4 (4000 Hz) and 159 to 2500 as 159 (100 Hz).
6	43	Two-stage torque filter Attenuation term	[Setting range: 0 to 1000] Set the attenuation term of 2-stage torque filter. This setup value is used to switchover between 1st and 2nd filter of 2-stage filter. 0 to 49: Operates as 1st filter. 50 to 1000: Operates as 2nd filter with ξ = 1.0 when setup value is 1000. Standard value is 1000; smaller setup value will cause oscillation.

How to Operate

When high frequency oscillation cannot be completely prevented by 1st and 2nd torque filter, setup the 2-stage torque filter. Set Pr6.43 (2-stage torque filter attenuation term) to 1000 (ξ = 1.0) and adjust Pr6.42 (2-stage torque filter constant) from minimum value 4 to increase gradually.

5. Manual Gain Tuning (Application)

High Response Current Control

Outline

High response current control is to improve the responsive function of the current control part by setting Pr6.11 “current response setting” to a value greater than default setting of 100%.
Since this function can easily lead to vibration and abnormal sound, please adjust to the appropriate value according to the operation status of the device, same as adjusting the position control unit and speed control unit.

Applicable Range

This function can be applicable only when the following condition are satisfied.

	Conditions for High Response Current Control Operations
Control Mode	• Full control mode
Others	• Applicable to software version after function extension 5. • Servo function : ON • Properly set conditions besides the control parameters, such as the torque limit, etc. The motor should operate normally without fault.

Correlative parameter

Class	No.	Parameter	Setting Range	Unit	Function
6	11	Current response setting	10 to 300	%	Set the default value as 100%, and adjust the current response. Improve current responsiveness by setting the value to more than 100%. (Note)Setup range of versions before functional extension 4 are 10 to 100%.

Caution

- Even if the function is same as the version after function extension 5, if the value of Pr6.11 “current response setting” is under 99, the current responsiveness can be reduced to under default setting value as before.
- The settable maximum value of each connected motor is different, it can be set to 300% at maximum(some motors can only be set to 100%).

6. About Homing Operation

Caution on Homing Operation

- In homing action by using the host controller, stop position might not be stabilized if the origin input (Z-phase of the encoder) is entered while the motor is not decelerated enough after the proximity input is turned on. Set up the ON-positions of proximity input and the position of origin point, considering the necessary pulse counts for deceleration. Take the positioning action and homing action into account when you set put acceleration/deceleration time with parameter, since this affect these action as well.
  For the details of homing, observe the instruction manual of the host controller.

- Example of Homing Action
  Proximity dog on... .Decelerates at an entry of the proximity input, and stops at an entry of the first origin input (Z-phase)

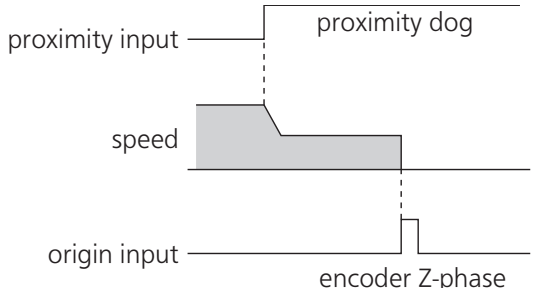

Proximity dog off... .Decelerates at an entry of the proximity input, and stops at an entry of the first origin input (Z-phase) after the input is tuned off

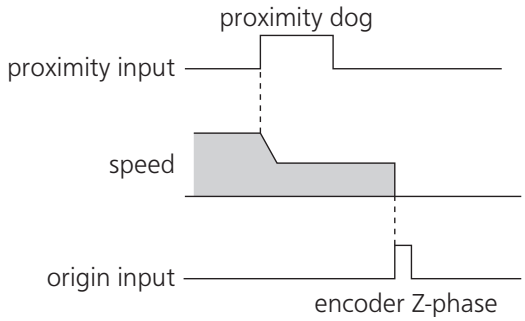

6. About Homing Operation

Homing with Hit & Stop

You can set up the homing position with "Hit & Stop" where it is not easy to install a sensor due to environment.

(1) when you make a point where the work (load) hits as an origin

(2) when you stop the work (load) using Z-phase after making a hitting point as a starting point, then make that stopping point as an origin.

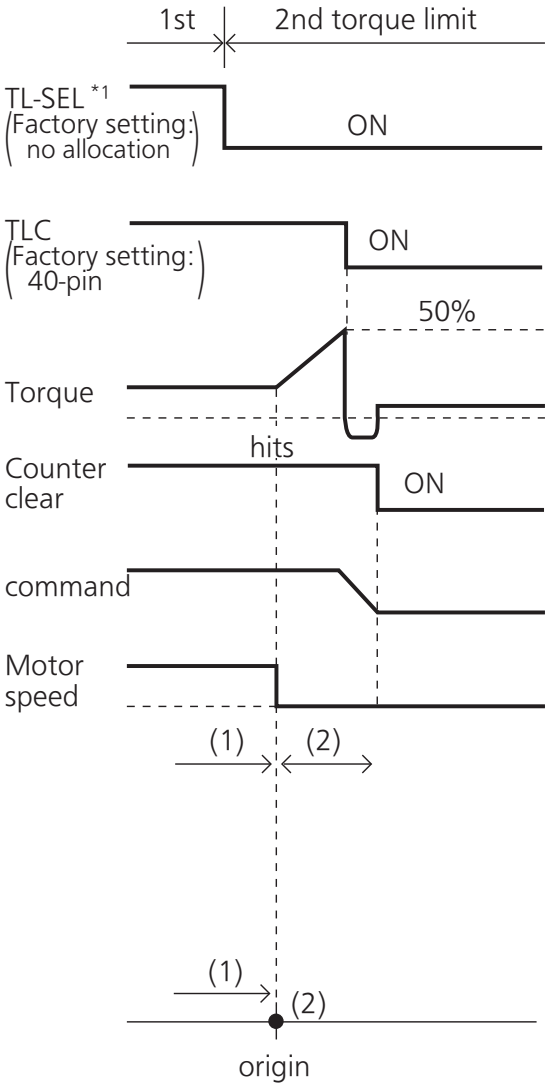

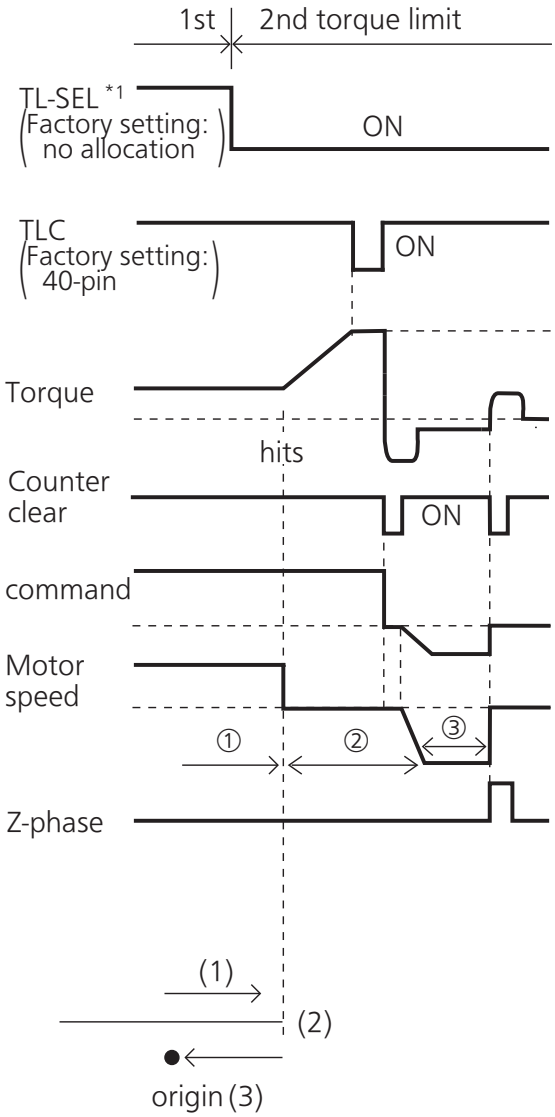

Parameter No.	Title	Setup example
5.22	Setup of 2nd torque limit	50 (Set up to less than 100 %)
0.14	Excess setup of position deviation	25000
5.13	Setup of over-speed level	0 (6000 r/min)
5.21	Selection of torque limit	3

Remarks Assign TL-SEL to the input signal.
Upon completion of the homing with hit and stop, turn off TL-SEL (open if logical setting is a-contact; close if b-contact).

Related page • P.4-7 to P.4-87 “Details of parameter”

6. About Homing Operation

Press & Hold Control

Application example

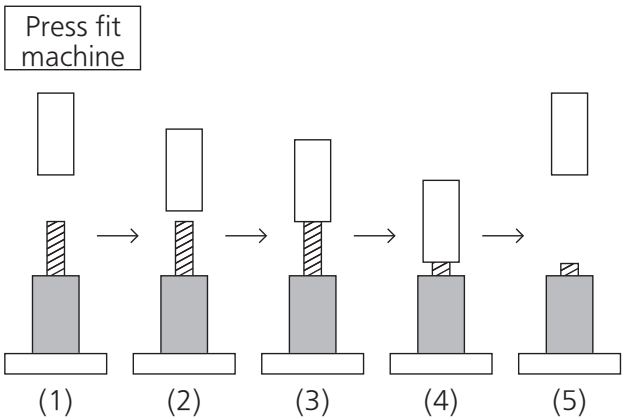

Parameter No.	Title	Setup example
5.21	Selection of torque limit	3
0.13	Setup of 1st torque limit	200
5.22	Setup of 2nd torque limit	50
0.14	Excess setup of position deviation	25000
5.13	Setup of over-speed level	0

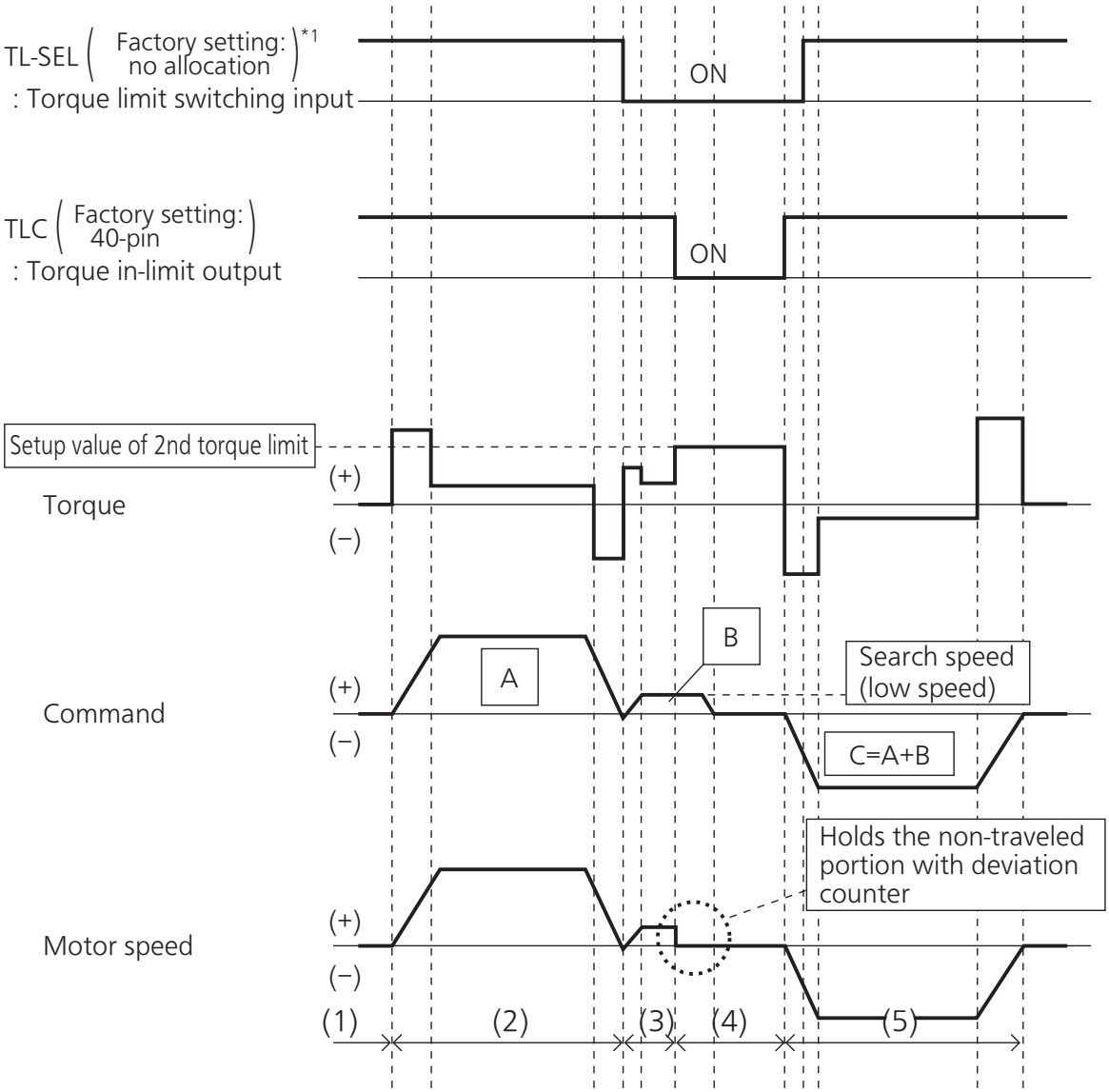

Remarks Assign TL-SEL to the input signal.

7. Applied functions

Position compare output function

Outline

A pulse signal can be output from the generic output or the position compare output when the actual position has passed the position set in the parameter.

Specification

Trigger output	I/F	[Generic output] 6 output (SO1 to 6) : Photocoupler (Open collector) [Position compare output] 1 output (OCMP4): Open collector 3 output (OCMP1 to 3): Line driver
	Logic	Parameter set (Polarity can be set for each output)
	Pulse width	Parameter set 0.1 to 3276.7 ms (in 0.1 ms units)
	Delay compensation	Available
Compare source	Encoder (comms)	Available
	External scale (comms)	Available
	External scale (A, B phase)	Available
Compare value	Set quantity	8 points
	Set range	32-bit with sign

Applicable range

This function is available only when the following conditions are satisfied:

	Conditions where position compare output function are valid
Control Mode	• Either position control or full-closed control
Others	• Block operation set to valid (Pr6.28 ≠ 0) • Return to origin operation completed state if in incremental mode. (In case block operation return to origin invalid setting is set to invalid). • All parameters except for the control parameters are set appropriately and there are nothing to obstruct the normal rotation of the motor.

Related parameters

<table>
<tr><th>Class</th><th>No.</th><th>Title</th><th>Function</th></tr>
<tr><td>4</td><td>44</td><td>Position compare output pulse width setting</td><td>Sets pulse width of position compare output
No pulse output when 0 (zero)</td></tr>
<tr><td>4</td><td>45</td><td>Position compare output polarity select</td><td>Polarity of position compare output can be set by bit for each output terminal.
• Set bits
bit0 : SO1 or OCMP1
bit1 : SO2 or OCMP2
bit2 : SO3 or OCMP3
bit3 : SO4 or OCMP4
bit4 : SO5
bit5 : SO6
• Set value
0 : Sets output photocoupler to ON for SO1 to 6, during pulse output and to L level for OCMP 1 to 4.
1 : Sets output photocoupler to OFF for SO1 to 6, during pulse output and to H level for OCMP 1 to 4.
Basically to be used set to 0.</td></tr>
<tr><td>4</td><td>47</td><td>Pulse output select</td><td>Selects signal to be output from pulse output/position compare output terminal:
<table>
<tr><th>Set value</th><th>Connector pin No.21/22</th><th>Connector pin No.48/49</th><th>Connector pin No.23/24</th><th>Connector pin No.19</th></tr>
<tr><td>0</td><td>OA</td><td>OB</td><td>OZ</td><td>CZ</td></tr>
<tr><td>1</td><td>OCMP1</td><td>OCMP2</td><td>OZ</td><td>CZ</td></tr>
<tr><td>2</td><td>OA</td><td>OB</td><td>OCMP3</td><td>OCMP3</td></tr>
<tr><td>3</td><td>OCMP1</td><td>OCMP2</td><td>OCMP3</td><td>OCMP3</td></tr>
<tr><td>4</td><td>OA</td><td>OB</td><td>OZ</td><td>OCMP4</td></tr>
<tr><td>5</td><td>OCMP1</td><td>OCMP2</td><td>OZ</td><td>OCMP4</td></tr>
<tr><td>6</td><td>OA</td><td>OB</td><td>OCMP3</td><td>OCMP4</td></tr>
<tr><td>7</td><td>OCMP1</td><td>OCMP2</td><td>OCMP3</td><td>OCMP4</td></tr>
</table>
*OA, OB, OZ, and CZ are pulse output signals and OCMP1, OCMP2, OCMP3, and OCMP4 are position compare output.</td></tr>
<tr><td>4</td><td>48</td><td>Position compare output polarity select 1</td><td>Sets position compare 1 comparison value</td></tr>
<tr><td>4</td><td>49</td><td>Position compare output polarity select 2</td><td>Sets position compare 2 comparison value</td></tr>
<tr><td>4</td><td>50</td><td>Position compare output polarity select 3</td><td>Sets position compare 3 comparison value</td></tr>
<tr><td>4</td><td>51</td><td>Position compare output polarity select 4</td><td>Sets position compare 4 comparison value</td></tr>
<tr><td>4</td><td>52</td><td>Position compare output polarity select 5</td><td>Sets position compare 5 comparison value</td></tr>
<tr><td>4</td><td>53</td><td>Position compare output polarity select 6</td><td>Sets position compare 6 comparison value</td></tr>
<tr><td>4</td><td>54</td><td>Position compare output polarity select 7</td><td>Sets position compare 7 comparison value</td></tr>
</table>

Class	No.	Title	Function
4	55	Position compare output polarity select 8	Sets position compare 8 comparison value
4	56	Position compare output delay compensation amount	Compensates circuit delay of position compare
4	57	Position compare output assignment setting	Sets output terminal corresponding to position compare 1 to 8 by bit. Multiple position compare values can be set to a single output • Set bits bit0 to 3 : Position compare 1 bit4 to 7 : Position compare 2 bit8 to 11 : Position compare 3 bit12 to 15 : Position compare 4 bit16 to 19 : Position compare 5 bit20 to 23 : Position compare 6 bit24 to 27 : Position compare 7 bit28 to 31 : Position compare 8 • Set value 0000 : Output invalid 0001 : Assigned to SO1 or OCMP1 0010 : Assigned to SO2 or OCMP2 0011 : Assigned to SO3 or OCMP3 0100 : Assigned to SO4 or OCMP4 0101 : Assigned to SO5 0110 : Assigned to SO6 Other than above: For manufacturer use (please do not use)

Operation

- A time width pulse set in Pr4.44 “Position compare output pulse width setting” will be output, when the actual position of the encoder passes over the position compare value (Pr4.48 to Pr4.55),

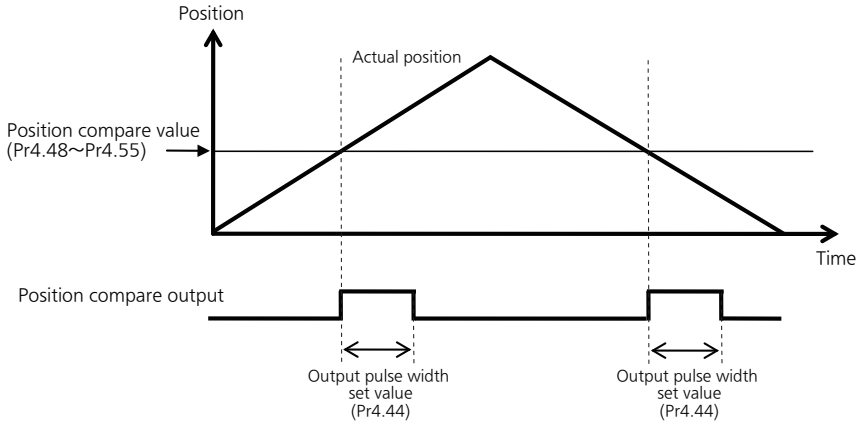

- Regardless of the direction of encoder position travel, a pulse will be output when the magnitude correlation changes as it passes over the position compare value.
- Multiple position compare value can be set to one position compare output.
- When the operation direction has been reversed, or when the external scale position has passed the position compare value, a state where pulse output is ON will continue from the time of the most recent passing until the output pulse width set value is reached.

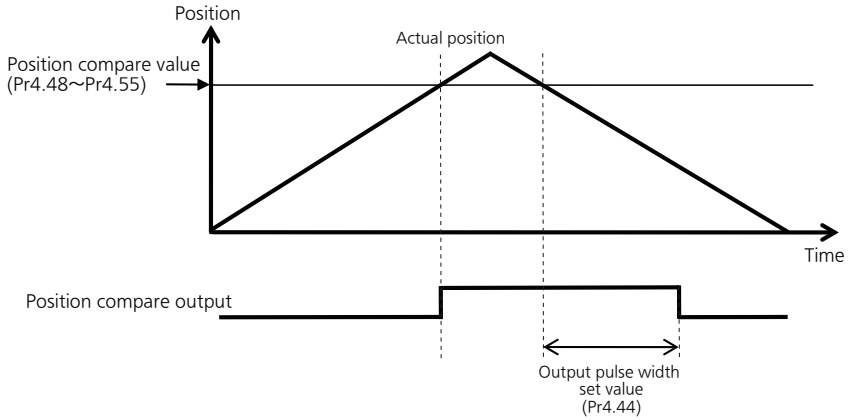

- When stopped at the same position as the position compare value, a single pulse will be output, similar to the case of passing over.

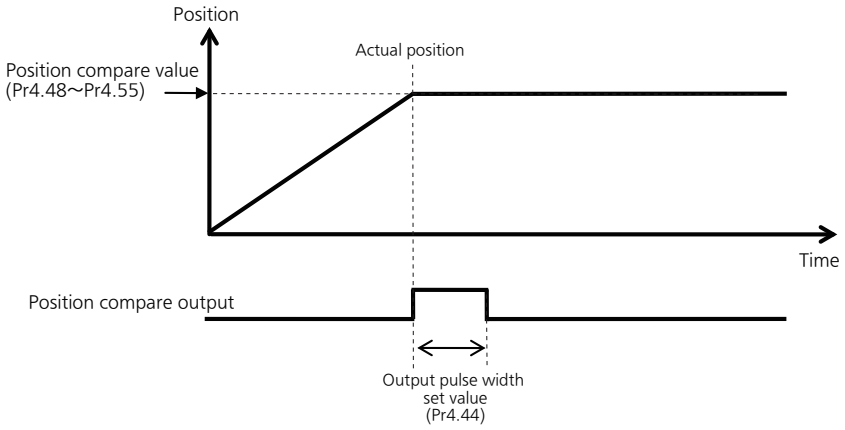

- When using generic outputs (SO1 to SO6) as position compare output (CMP-OUT), assign position compare output to Pr4.40 to 4.15 under all control mode.
- Position compare output function automatically compensates the output for errors caused by time delay of encoder serial communications, etc., taking reference on the previous motor velocity. Furthermore, the amount of compensation can be set by adjustment of Pr4.56 “Position compare output delay compensation amount” .
- When using generic output(SO1 to SO6) as position output(CMP-OUT), it can't monitor position compare output by PANATERM,Modbus communication.

7. Applied functions

Infinite rotation absolute function

Outline

Function to set the upper limit value of absolute encoder multi-rotation data to any arbitrary value.

Related parameters

Class	No.	Title	Function
0	15	Absolute encoder setting	Sets the method of using the absolute encoder. 0: Use under absolute system (Absolute mode). 1: Use under incremental system (Incremental mode). 2: Use under absolute system (Absolute mode) but multi-rotation counter overflow is ignored 3: For manufacturer use (please do not set) 4: Used under absolute system (Absolute mode) but the upper limit value of the multi-rotation counter can be set to any value. Multi-rotation counter overflow is also ignored. (Infinite rotation absolute mode)
6	88	Absolute multi-rotation upper limit value	Sets the upper limit value for absolute multi-rotation data under infinite rotation absolute mode(when Pr0.15 is set to 4). When the multi-rotation data exceeds this set value, the multi-rotation data will turn to 0. Inversely, if it goes at 0, it will change to the set value. When Pr0.15 is set to 0 or 2(absolute mode), the upper limit value for the absolute multi-rotation data shall be 65535, regardless of the set value. When Pr0.15 is set to 1(incremental mode) or Pr0.15 set to 3(for manufacturer use), this set value is invalid.

Notes

- This setting will become effective when Pr0.15 “Absolute encoder setting” is set to 4 and the control power supply is reclosed.
- In case of discrepancy in the encoder multi-rotation data upper limit value and the driver parameter multi-rotation data upper limit value when the control power supply is reclosed, Err92.3 “Multi-rotation data upper limit value mismatch error protection” will always be triggered, however this is not an abnormal condition.
  By reclosing the driver control power supply, the phenomenon will not reappear again.
- Please refer to P.7-12 “Absolute system” for Absolute system configuration.

7. Applied functions

Deterioration diagnosis warning function

Outline

This is a function to check the changes in motor and connected equipment characteristics to output deterioration diagnosis warning.

Related parameters

Class	No.	Title	Function
5	66	Deterioration diagnosis convergence judgment time	Sets the time required to deem that real-time auto tuning load characteristics estimate has converged when deterioration diagnosis warning function is activated (Pr6.97 bit 1 = 1). When the set value is 0, it will be set automatically inside the driver in accordance with Pr6.31 (real-time auto tuning convergence velocity). * When Pr6.31 (real-time auto tuning convergence velocity) = 0, the deterioration diagnosis warning judgment for load characteristics estimate will be invalid.
5	67	Deterioration diagnosis inertia ratio upper limit value	Sets the upper and lower limit values for inertia ratio estimate in deterioration diagnosis judgment when deterioration diagnosis warning is valid (Pr6.97 bit 1 = 1) and load characteristics estimate convergence has been completed. * The set resolution shall be in units of 0.2%.
5	68	Deterioration diagnosis inertia ratio lower limit value	
5	69	Deterioration diagnosis unbalanced load upper limit value	Sets the upper and lower limit values for unbalanced load estimate in deterioration diagnosis judgment when deterioration diagnosis warning is valid (Pr6.97 bit 1 = 1) and load characteristics estimate convergence has been completed. * The set resolution shall be in units of 0.2%.
5	70	Deterioration diagnosis unbalanced load lower limit value	
5	71	Deterioration diagnosis dynamic friction upper limit value	Sets the upper and lower limit values for dynamic friction estimate in deterioration diagnosis judgment when deterioration diagnosis warning is valid (Pr6.97 bit 1 = 1) and load characteristics estimate convergence has been completed. * The set resolution shall be in units of 0.2%.
5	72	Deterioration diagnosis dynamic friction lower limit value	
5	73	Deterioration diagnosis viscous friction upper limit value	Sets the upper and lower limit values for viscous friction coefficient estimate in deterioration diagnosis judgment when deterioration diagnosis warning is valid (Pr6.97 bit 1 = 1) and load characteristics estimate convergence has been completed. * The set resolution shall be in units of 0.2%.
5	74	Deterioration diagnosis viscous friction lower limit value	

Class	No.	Title	Function
5	75	Deterioration diagnosis velocity setting	Outputs deterioration diagnosis velocity output (V-DIAG) when deterioration diagnosis warning is valid (Pr6.97 bit 1 = 1) and the motor velocity is within the range of Pr5.75 ± Pr4.35 (velocity coinciding width). * Deterioration diagnosis velocity output has a 10 [r/min] hysteresis.
5	76	Deterioration diagnosis torque average time	Sets time required to calculate the torque command average value when deterioration diagnosis warning is valid (Pr6.97 bit 1 = 1) and diagnosis velocity output (V-DIAG) is ON. * Time from diagnosis velocity output (V-DIAG) ON to the start judgment for upper and lower value of torque command average value is also a part of the set time for this parameter.
5	77	Deterioration diagnosis torque upper limit value	Sets the upper and lower limit values of torque command average value when deterioration diagnosis warning is valid (Pr6.97 bit 1 = 1) and deterioration diagnosis velocity output (V-DIAG) is ON.
5	78	Deterioration diagnosis torque lower limit value	
6	97	Function expansion setting 3	Bit 1 to set the deterioration diagnosis warning function to valid or invalid 0: invalid, 1: valid Bit 15 to set the deterioration diagnosis torque command average value latching to valid or invalid. 0: invalid, 1: valid

Precautions

- When the upper limit value is set to the maximum value, the upper limit judgment will become invalid.
- When the lower limit value is set to the minimum value, the lower limit judgment will become invalid.
- In case upper limit value ≤ lower limit value, then both the upper limit and lower limit judgment will become invalid.

Contents

- The following 5 deterioration diagnosis warning functions can be used by setting bit 1 of Pr6.97(Function expansion setting 3) to 1.
  -Inertia ratio
  -Unbalanced load
  -Dynamic friction
  -Viscous friction coefficient
  -Torque command average value

(1) Deterioration diagnosis warning for load characteristics estimates(inertia ratio, unbalanced load, dynamic friction, and viscous friction coefficient)
- Deterioration diagnosis warning judgment for four load characteristics estimates(inertia ratio, unbalanced load, dynamic friction, and viscous friction coefficient) can be used in case real-time auto tuning load characteristics estimate is valid (Refer to A6 series technical data (Basic functional specification) Item 5-1-1, 5-1-3, 5-1-4).

- The above mentioned deterioration diagnosis warning judgment will become effective when the required operational conditions for load characteristics estimate has continued in total for Pr5.66(deterioration diagnosis convergence judgment time) or more, and the load characteristics estimate has converged. Once it has become effective, it will remain in effect until Pr6.97 bit 1 is set to 0 (invalid) or the real-time auto tuning load characteristics estimate is invalidated.
- For each load characteristics estimate value, its upper and lower limit value can be set by the parameters as indicated in the following table. In case the load characteristics estimates has exceeded the upper or lower limit values for changes in load characteristics estimate, it generates deterioration diagnostic warning number AC.

	Inertia ratio	Unbalanced load	Dynamic friction	Viscous friction
Upper limit value	Pr5.67	Pr5.69	Pr5.71	Pr5.73
Lower limit value	Pr5.68	Pr5.70	Pr5.72	Pr5.74

* Set resolution for the upper and lower limit of friction torque estimates (unbalanced load,dynamic friction, and viscous friction coefficient) shall be in units of 0.2 %.

* In case Pr6.31(real-time auto-tuning convergence velocity) is set to 0 and is estimate stopped from the start or before the load characteristics estimate results has been confirmed, deterioration diagnosis warning judgment will become invalid even if real-time auto tuning load characteristics estimate is valid.

(2) Deterioration diagnosis warning for constant velocity torque command average value

This function is that the motor can measure the torque command moving at a certain speed at a certain time, and when its average value exceeds the threshold value, it can generate a deterioration diagnosis warning. The motion of this function is shown in below chart.

i) In case that no deterioration diagnosis warning for torque command average value

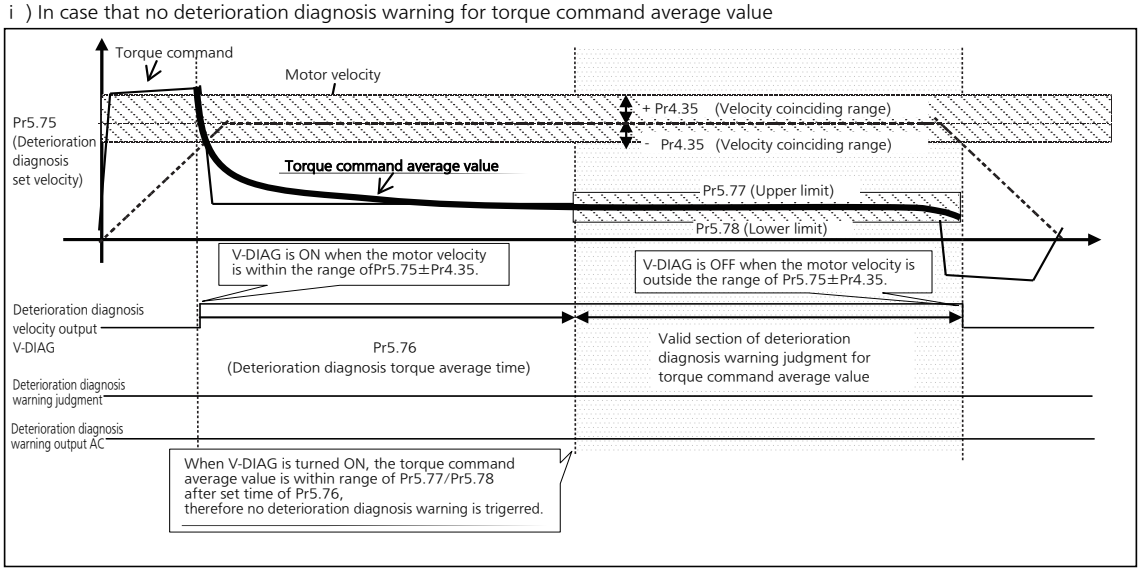

i i) In case that no deterioration diagnosis warning for torque command average value

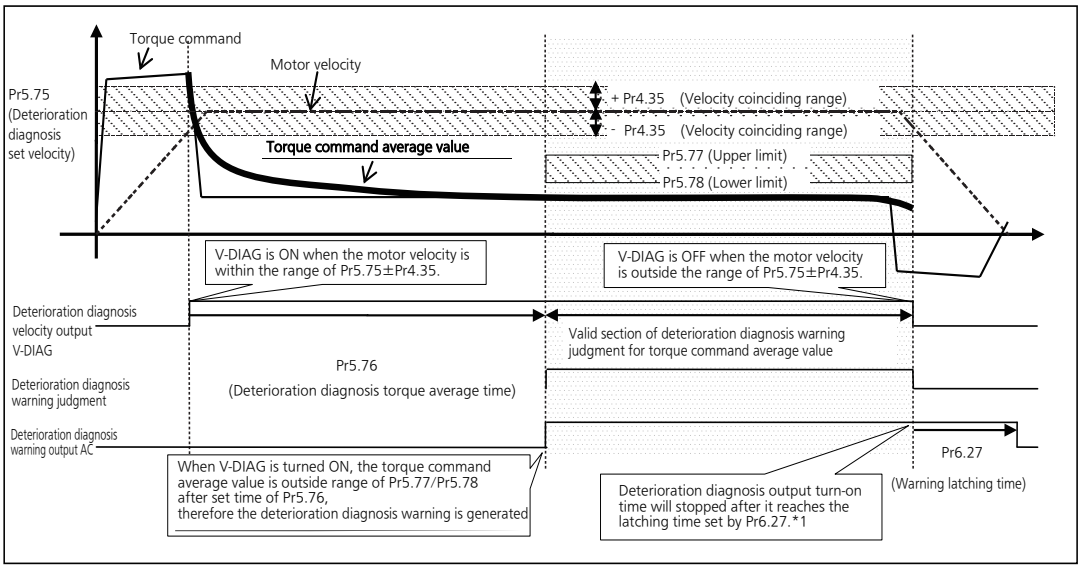

- When deterioration diagnosis output is turned ON, torque command average calculation will start. If the torque command average value exceeds Pr5.77(deterioration diagnosis torque upper limit) or Pr5.78(deterioration diagnosis torque lower limit), the deterioration diagnosis warning number AC will be generated.
- V-DIAG(Deterioration diagnosis velocity output) is ON when the motor velocity is within the range of Pr5.75(Deterioration diagnosis set velocity) ± Pr4.35(Velocity coinciding range),OFF when the motor velocity is out of the range. In V-DIAG OFF section, torque command average value is 0, deterioration diagnosis warning will be OFF.
- The valid section of torque command average value deterioration diagnosis warning judgment is from when V-DIAG is turned on to the duration reaches the set value of Pr5.75.

*1 Deterioration diagnosis warning output of the invalid section of torque command average value deterioration diagnosis warning judgment is different when deterioration diagnosis torque command average embedded value(Pr6.97 bit5) is valid and invalid.

☐ Deterioration diagnosis torque command average value latching(Pr6.97 bit5)
When deterioration diagnosis torque command average embedded value is valid(Pr6.97 bit5=1), only the torque command average value of the deterioration diagnosis valid section is updated. When it is invalid(Pr6.97 bit5=0),torque command average value is constantly updated.

* Due to USB communication delay, the torque command average value obtained by USB is delayed than current value. Therefore, sometimes only the torque command average value of the deterioration diagnosis invalid section can be obtained. By setting deterioration diagnosis torque command average value latching as effective, only the torque command average value of deterioration diagnosis valid section can be obtained.
The difference between the operation example when this function is valid and invalid is shown as below.

· Operation example in case that deterioration diagnosis torque command average value latching is invalid(Pr6.97 bit 5=0)

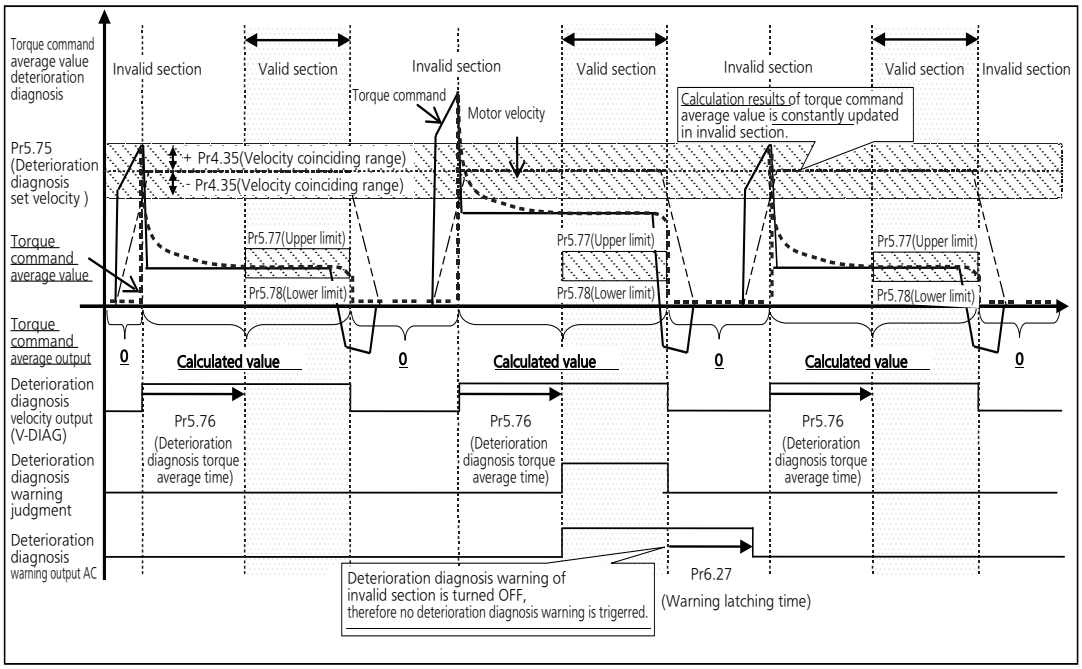

· Operation example in case that deterioration diagnosis torque command average value latching is valid(Pr6.97 bit 5=1)

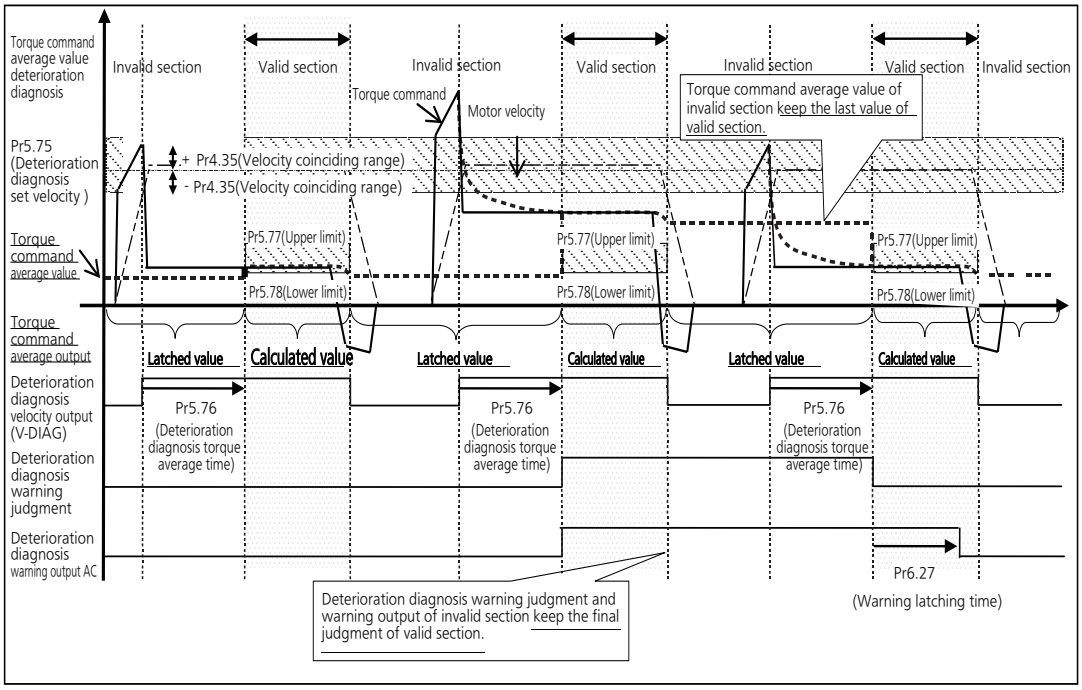

6. When in Trouble

1. When in Trouble
- What to Check ? 6-2
- Protective function (What is Error Code ?) 6-3
- Protective function (Detail of error code) 6-5
- Fall prevention function in the event of alarms..... 6-24
- Slow Stop function 6-25
- Warning functions 6-28

2. Setup of gain pre-adjustment protection 6-29

3. Troubleshooting
- Motor Does Not Run 6-32
- Unstable Rotation (Not Smooth) , Motor Runs Slowly Even with Speed Zero at Velocity Control Mode 6-34
- Positioning Accuracy Is Poor 6-35
- Origin Point Slips 6-36
- Abnormal Motor Noise or Vibration 6-36
- Overshoot/Undershoot, Overheating of the Motor (Motor Burn-Out) 6-37
- Motor Speed Does Not Reach to the Setup, Motor Revolutions (Travel) Is Too Large or Small 6-37
- Parameter Returns to Previous Setup 6-38

1. When in Trouble

What to Check ?

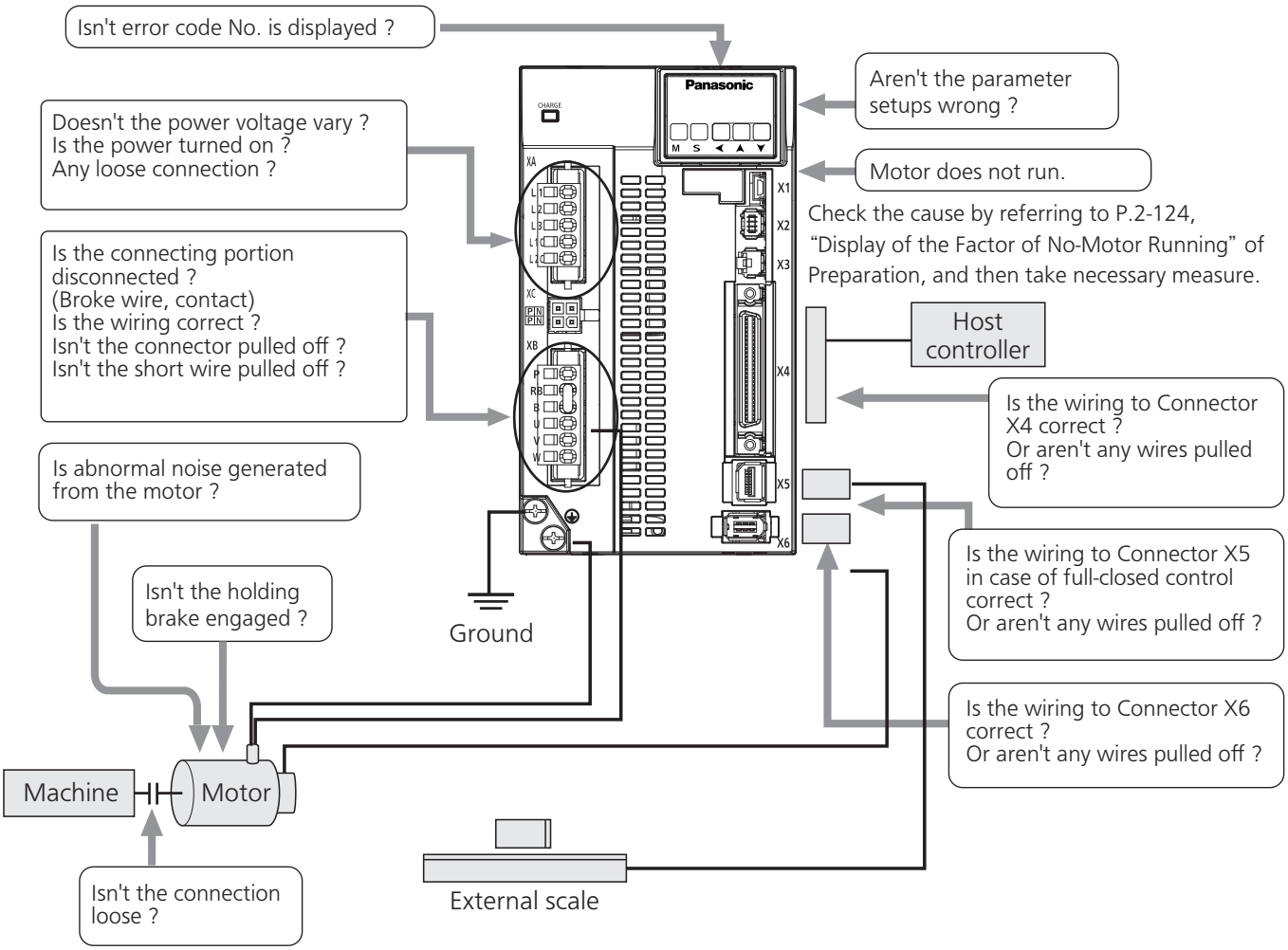

Related page
- P.2-110 "How to Use the Front Panel"
- P.3-34 "Inputs and outputs on connector X4"
- P.7-28 "Outline of Setup support software "PANATERM"

1. When in Trouble

Protective Function (What is Error Code ?)

- Various protective functions are equipped in the driver. When these are triggered, the motor will stall due to error, the driver will turn the Servo-Alarm output (ALM) to off (open).
- Error status and their measures
  - During the error status, the error code No. will be displayed on the front panel LED, and you cannot turn Servo-ON.
  - You can clear the error status by Alarm clear input(A-CLR) in 120 ms or longer.
  - When overload protection is triggered, you can clear it by Alarm clear input (A-CLR) in 10sec or longer after the error occurs. (*1 Table below) You can clear the Overload protection time characteristics (refer to P.6-17) by turning off the control power supply between L1C and L2C (100 V, 200 V) of the driver, or by turning off the control power supply between 24 V and 0 V (400 V).
  - You can clear the above error by operating the front panel keys and setup support softwear "PANATERM". Refer to P.2-134 “Alarm Clear Screen” of Preparation.
  - Be sure to clear the alarm during stop after removing the cause of the error and securing safety.

<List of error code No.>

Error code Main	Error code Sub	Protective function	Attribute: History	Attribute: Can be cleared	Attribute: Immediate stop*3	Detail page
11	0	Under voltage protection of control power supply		○		6-5
12	0	Over-voltage protection	○	○		6-5
13	0	Main power supply under-voltage protection (between P and N)		○		6-5
	1	Main power supply under-voltage protection (AC interception detection)		○	○	6-5
14	0	Over-current protection	○			6-6
	1	IPM error protection	○			6-6
15	0	Over-heat protection	○		○	6-6
	1	Encoders abnormal overheat protection	○		○	6-6
	2	Fan error protection	○		○	6-6
16	0	Over-load protection	○	○*1	Switchable*2	6-6
	1	Torque saturation error protection	○	○		6-7
18	0	Over-regeneration load protection	○		○	6-7
	1	Regeneration Tr error protection	○			6-7
21	0	Encoder communication disconnect error protection	○			6-7
	1	Encoder communication error protection	○			6-7
23	0	Encoder communication data error protection	○			6-7
24	0	Position deviation excess protection	○	○	○	6-8
	1	Speed deviation excess protection	○	○	○	6-8
25	0	Hybrid deviation excess error protection	○		○	6-8
26	0	Over-speed protection	○	○	○	6-8
	1	2nd over-speed protection	○	○		6-8
27	0	Command pulse input frequency error protection	○	○	○	6-9
	1	Absolute clear abnormal protection	○			6-9
	2	Command pulse multiplier error protection	○	○	○	6-9
28	0	Limit of pulse replay error protection	○	○	○	6-9
29	0	Deviation counter overflow protection	○	○		6-9
	1	counter overflow protection 1	○			6-9
	2	Counter overflow error protection 2	○			6-9
31	0	Safety function error protection 1	○			6-9
	2	Safety function error protection 2	○			6-9

Error code Main	Error code Sub	Protective function	Attribute: History	Attribute: Can be cleared	Attribute: Immediate stop*3	Detail page
33	0	IF overlaps allocation error 1 protection	○			6-10
	1	IF overlaps allocation error 2 protection	○			6-10
	2	IF input function number error 1 protection	○			6-10
	3	IF input function number error 2 protection	○			6-10
	4	IF output function number error 1 protection	○			6-10
	5	IF output function number error 2 protection	○			6-10
	6	Counter clear allocation error	○			6-10
	7	Command pulse inhibition input allocation error	○			6-10
34	0	Motor working range setup error protection	○	○		6-10
36	0 to 1	EEPROM parameter error protection				6-10
37	0 to 2	EEPROM check code error protection				6-10
38	0	Drive prohibition input protection		○		6-11
39	0	Analog input1 excess protection	○	○	○	6-11
	1	Analog input2 excess protection	○	○	○	6-11
	2	Analog input3 excess protection	○	○	○	6-11
40	0	Absolute system down error protection	○	○*4		6-11
41	0	Absolute counter over error protection	○			6-11
42	0	Absolute over-speed error protection	○	○*4		6-11
44	0	Absolute single turn counter error protection	○			6-12
45	0	Absolute multi-turn counter error protection	○			6-12
47	0	Absolute status error protection	○			6-12
50	0	External scale connection error protection	○			6-12
	1	External scale communication error protection	○			6-12
	2	External displacement sensor communication data error protection	○			6-12

Note

History...The error will be stored in the error history.
Can be cleared...To cancel the error, use the alarm clear input (A-CLR).
If the alarm clear input is not effective, turn off power, remove the cause of the error and then turn on power again.
Immediate stop...Instantaneous controlled stop upon occurrence of an error.
(Setting of “Pr.5.10 Sequence at alarm” is also required.)

Error code		Protective function	Attribute			Detail page
Main	Sub		History	Can be cleared	Immediate stop *3	
51	0	External scale status 0 error protection	○			6-12
	1	External scale status 1 error protection	○			
	2	External scale status 2 error protection	○			
	3	External scale status 3 error protection	○			
	4	External scale status 4 error protection	○			
	5	External scale status 5 error protection	○			
55	0	A-phase connection error protection	○			6-13
	1	B-phase connection error protection	○			
	2	Z-phase connection error protection	○			
70	0	U-phase current detector error protection	○			
	1	W-phase current detector error protection	○			
71	0	CCWTL anomaly protection	○			
	1	CWTL anomaly protection	○			
72	0	Thermal Error protection	○			
80	0	RS232/RS485/Modbus communication timeout protection	○	○	○	
83	2	RS232/RS485/Modbus communication continuous error protection	○	○	○	
87	0	Compulsory alarm input protection		○	○	
92	0	Encoder data recovery abnormal protection	○			6-14
	1	External scale data recovery error protection	○			
	3	Multi-turn data upper-limit value disagreement error protection	○			
93	0	Parameter setup error protection 1	○			
	1	Block data setting error protection	○	○		
	2	Parameter setup error protection 2	○			
	3	External scale connection error protection				
	8	Parameter setup error protection 6				6-15
94	0	Block operation error protection	○	○		
	2	Homing error protection	○	○		
	3	Homing error protection 2	○	○		
95	0 to 4	Motor automatic recognition error protection				6-16
96	2	Control unit error protection	○			
97	0	Other error				
98	5	Hardware self-diagnostic anomaly protection 1				
Other number		Other error	○			

*1 : When Err16.0 “Overload Protection 1” is activated, error can be cleared about 10 seconds after the occurrence.

*2 :When Err40.0 “Absolute System Down Error protection,” or Err42.0 “Absolute Overspeed Protection” occurs, the error is unable to be cleared unless Absolute Clear is performed.

*3 : Immediate stop refers to alarms which result in an immediate stop when setting is made to 4 to 7 in Pr5.10 “Sequence at alarm” are shown. For the detail of an immediate stop, see P.4-55 “Sequence at alarm.”

*4 : Err 16.0 “Overload protection,” can be switched to responsive/non-responsive by switching bit 11 of “Function expansion setting 2” of Pr 6.47. Set to non-responsive at time of shipment.

1. When in Trouble

Protective function (Detail of error code)

Protective function	Error code No. Main	Error code No. Sub	Causes	Measures
Under voltage protection of control power supply	11	0	Voltage between P and N of converting unit of control power supply has fallen down and dropped below specified value. 100 V version: approx. 200 VDC (approx. 140 VAC) 200 V version: approx. 400 VDC (approx. 280 VAC) 1) Low power supply voltage. Occurrence of momentary power failure. 2) Power capacity shortage…Due to rush current at the main power-on, power supply voltage has fallen down. 3) Servo driver failure (circuit failure)	Measure L1C-L2C line voltage of connector and terminal block 1) Increase the capacity of power supply voltage. Change the power supply. 2) Increase the power capacity. 3) Replace with new servo driver.
Over-voltage protection	12	0	Voltage between P and N of the converter portion of the control power supply has exceeded the specified value 100 V version: approx. 200 VDC (approx. 140 VAC) 200 V version: approx. 400 VDC (approx. 280 VAC) 1) Power supply voltage has exceeded the permissible input voltage. Voltage surge due to the phase-advancing capacitor or UPS (Uninterruptible Power Supply) have occurred. 2) Disconnection of the regeneration discharge resistor 3)External regeneration resistor is not appropriate and could not absorb the regenerative energy. 4) External regeneration discharge resistor is not appropriate and could not absorb the regeneration energy. 5) Failure of servo driver (failure of the circuit)	Measure the voltage between lines of connector (L1, L2 and L3). 1) Enter correct voltage. Remove a phase-advancing capacitor. 2) Measure the resistance of the external resistor connected between terminal P - B of the driver. Replace the external resistor if the value is ∞ . 3) Change the specified regeneration resistance value to wattage. 4) Change to the one with specified resistance and wattage. 5) Check that Pr0.16.
Main power supply under-voltage protection (PN)	13	0	Instantaneous power failure has occurred between L1 and L3 for longer period than the preset time with Pr5.09 (Main power off detecting time) while Pr5.08 (LV trip selection at the main power-off) is set to 1. Or the voltage between P and N of the converter portion of the main power supply has fallen below the specified value during Servo-ON. 100 V version: approx. 80 VDC (approx. 55 VAC) 200 V version: approx. 110 VDC (approx. 75 VAC) 1) Power supply voltage is low. Instantaneous power failure has occurred 2) Instantaneous power failure has occurred. 3) Lack of power capacity...Power supply voltage has fallen down due to inrush current at the main power-on. 4) Phase lack...3-phase input driver has been operated with single phase input. 5) Failure of servo driver (failure of the circuit)	Measure the voltage between lines of connector (L1, L2 and L3). 1) Increase the power capacity. Change the power supply. Remove the causes of the shutdown of the magnetic contactor or the main power supply, then re-enter the power. 2) Set up the longer time to Pr5.09 (Main power off detecting time). Set up each phase of the power correctly. 3) Increase the power capacity. For the capacity, refer to P.2-10, "Driver and List of Applicable Peripheral Equipments" of Preparation. 4) Connect each phase of the power supply (L1, L2 and L3) correctly. For single phase, 100 V and 200 V driver, use L1 and L3. 5) Replace the driver with a new one.
Main power supply under-voltage protection (AC)		1		

Related page • P.2-12 “System Configuration and Wiring” • P.4-7 to P.4-87 “Details of parameter”

Protective function	Error code No. Main	Error code No. Sub	Causes	Measures
* Over-current protection	14	0	Current through the converter portion has exceeded the specified value. 1) Failure of servo driver (failure of the circuit, IGBT or other components) 2) Short of the motor wire (U, V and W)	1) Turn to Servo-ON, while disconnecting the motor. If error occurs immediately, replace with a new driver. 2) Check that the motor wire (U, V and W) is not shorted, and check the branched out wire out of the connector. Make a correct wiring connection. 3) Measure the insulation resistance between motor wires, U, V and W and earth wire. In case of poor insulation, replace the motor. 4) Check the balance of resister between each motor line, and if unbalance is found, replace the motor. 5) Check the loose connectors. If they are, or pulled out, fix them securely. 6) Replace the servo driver. Do not use Servo-ON/Servo-OFF as a means of staring/stopping the operation. 7) Enter the pulses 100 ms or longer after Servo-ON. 8) Replace the driver. 9)Increase capacity of servo driver and motor. Set up longer acceleration/deceleration time.Reduce the load.
* IPM error protection [IPM: Intelligent Power Module]		1	3) Earth fault of the motor wire 4) Burnout of the motor 5) Poor contact of the motor wire. 6) Welding of contact of dynamic braking relay due to frequent servo ON/OFF operations. 7) Timing of pulse input is same as or earlier than Servo-ON. 8) Blowout of thermal fuse due to overheating dynamic brake circuit. (Only F and G frames) 9) Power Modulef overheat protection.	
* Over-heat protection	15	0	Temperature of the heat sink or power device has been risen over the specified temperature. 1) Ambient temperature has risen over the specified temperature. 2) Over-load	1) Improve the ambient temperature and cooling condition. 2) Increase the capacity of the driver and motor. Set up longer acceleration/deceleration time. Lower the load.
* Encoders abnormal Over-heat protection		1	When encoder overheating prtection detection is valid by the setting value of bit 11 Pr6.10,(Invaild initial set value) The temperature of encoder has exceeded an encoder overheat abnormal level. 1) The ambient temperature of servomotor is high. 2) Overload	1) Improve the ambient temperature of servomotor and the cooling condition. 2) Increase capacity of servo driver and motor. Set up longer acceleration/deceleration time.Reduce the load.
Fan error protection		2	The regenerative load ratio exceeded the specified value when the fan stopped for 1 second.	If this occurs repeatedly, there is a possibility of failure, so replace the servo amplifier. Return it to the shop where it was purchased for investigation (repair).
Over-load protection	16	0	Torque command value has exceeded the over-load level set with Pr5.12 (Setup of over-load level) and resulted in overload protection according to the time characteristics (described later) 1) Load was heavy and actual torque has exceeded the rated torque and kept running for a long time. 2) Oscillation and hunching action due to poor adjust ment. Motor vibration, abnormal noise. Inertia ratio (Pr0.04) setup error. 3) Miswiring, disconnection of the motor. 4) Machine has collided or the load has gotten heavy. Machine has been distorted. 5) Electromagnetic brake has been kept engaged. 6) While wiring multiple axes, miswiring has occurred by connecting the motor cable to other axis.	Check that the torque (current) does not oscillates nor fluctuate up an down very much on the analog outoput and via communication. Check the over-load alarm display and load factor with the analog outoput and via communication.. 1) Increase the capacity of the driver and motor. Set up longer acceleration/deceleration time. Lower the load. 2) Make a re-adjustment. 3) Make a wiring as per the wiring diagram. Replace the cables. 4) Remove the cause of distortion. Lower the load. 5) Measure the voltage between brake terminals. Release the brake 6) Make a correct wiring by matching the correct motor and encoder wires.

• The over-load protection time characteristics are described on P.6-17.

Caution Once this error occurs, it cannot be cleared at least for 10 sec.

Protective function	Error code No. Main	Error code No. Sub	Causes	Measures
Torque saturation anomaly protection	16	1	Torque saturation has continued for the time set in Pr6.57 Torque saturation error protection detect time.	• Check operation of the driver. • Refer to Measures described for Err16.0.
* Over-regeneration load protection	18	0	Regenerative energy has exceeded the capacity of regenerative resistor. 1) Due to the regenerative energy during deceleration caused by a large load inertia, converter voltage has risen, and the voltage is risen further due to the lack of capacity of absorbing this energy of the regeneration discharge resistor. 2) Regenerative energy has not been absorbed in the specified time due to a high motor rotational speed. 3) Active limit of the external regenerative resistor has been limited to 10 % duty.	Check the load factor of the regenerative resistor from the front panel or via communication. Do not use in the continuous regenerative brake application. 1) Check the running pattern (velocity monitor). Check the load factor of the regenerative resistor and over-regeneration warning display. Increase the capacity of the driver and the motor, and loosen the deceleration time. Use the external regenerative resistor. 2) Check the running pattern (speed monitor). Check the load factor of the regenerative resistor. Increase the capacity of the driver and the motor, and loosen the deceleration time. Lower the motor rotational speed. Use an external regenerative resistor. 3) Set up Pr0.16 to 2. **Caution** Install an external protection such as thermal fuse without fail when you set up Pr0.16 to 2. Otherwise, regenerative resistor loses the protection and it may be heated up extremely and may burn out.
* Regenerative transistor error protection	18	1	Regenerative driver transistor on the servo driver is defective.	Replace the driver.
*Encoder communication disconnection error protection	21	0	Communication between the encoder and the driver has been interrupted in certain times, and disconnection detecting function has been triggered.	Make a wiring connection of the encoder as per the wiring diagram. Correct the miswiring of the connector pins.
*Encoder communication error protection		1	Communication error has occurred in data from the encoder. Mainly data error due to noise. Encoder cables are connected, but communication data has some errors.	• Secure the power supply for the encoder of DC4.90 V to 5.25 V)...pay an attention especially when the encoder cables are long. • Separate the encoder cable and the motor cable if they are bound together. • Connect the shield to FG.
*Encoder communication data error protection	23	0	Data communication between the encoder is normal, but contents of data are not correct. Mainly data error due to noise. Encoder cables are connected, but communication data has some errors.	

Note
- When protective function marked with * in the protective function table is activated, it cannot be disabled by the alarm clear input (A-CLR). To return to the normal operation, turn off power, remove the cause, and then turn on power again.

Related page
- P.4-7 to P.4-87 “Details of parameter”

Protective function	Error code No. Main	Error code No. Sub	Causes	Measures
Position deviation excess protection	24	0	Deviation pulses have exceeded the setup of Pr0.14. 1) The motor movement has not followed the command. 2) Setup value of Pr0.14 (Position deviation excess setup) is small.	1) Check that the motor follows to the position command pulses. Check that the output toque has not saturated in torque monitor. Make a gain adjustment. Set up maximum value to Pr0.13 and Pr5.22. Make a encoder wiring as per the wiring diagram. Set up the longer acceleration/deceleration time. Lower the load and speed. 2) Set up a larger value to Pr0.14.
Speed deviation excess protection		1	The difference between the internal positional command speed and actual speed (speed deviation) exceeds the setup vale of Pr6.02. Note) If the internal positional command speed is forcibly set to 0 due to instantaneous stop caused by the command pulse inhibit input (INH) or CW/CCW over-travel inhibit input, the speed deviation rapidly increases at this moment. Pr6.02 setup value should have sufficient margin because the speed deviation also largely increases on the rising edge of the internal positional command speed.	• Increase the setup value of Pr6.02. • Lengthen the acceleration/deceleration time of internal positional command speed, or improve the follow-up characteristic by adjusting the gain. • Disable the excess speed deviation detection (Pr6.02 = 0).
*Hybrid deviation excess error protection	25	0	• Position of load by the external scale and position of the motor by the encoder slips larger than the setup pulses with Pr3.28 (Setup of hybrid deviation excess) at full-closed control. • During full closed control, numerator of command division/multiplication is changed or switched over.	• Check the connection between the motor and the load. • Check the connection between the external scale and the driver. • Check that the variation of the motor position (encoder feedback value) and the load position (external scale feedback value) is the same sign when you move the load. • Check that the numerator and denominator of the external scale division (Pr3.24 and 3.25) and reversal of external scale direction (Pr3.26) are correctly set. • Do not change command division/ multiplication during full closed control.
Over-speed protection	26	0	The motor rotational speed has exceeded the setup value of Pr5.13.	• Do not give an excessive speed command. • Check the command pulse input frequency and division/multiplication ratio. • Make a gain adjustment when an overshoot has occurred due to a poor gain adjustment. • Make a wiring connection of the encoder as per the wiring diagram.
2nd Over-speed protection		1	The motor rotational speed has exceeded the setup value of Pr6.15.	

Protective function	Error code No. Main	Error code No. Sub	Causes	Measures
Command pulse input frequency error protection	27	0	The frequency of command pulse input is more than 1.2 times the setting in Pr5.32.	Check the command pulse input for frequency.
*Absolute clear abnormal protection		1	Absolute encode multi-rotation clear has been executed when a block operation was enabled (Pr 6.28 is non 0).	Confirm whether absolute encode multi-rotation clear has when a block operation was enabled.(Note) This is a safety measure and is not an abnormality.
Command pulse multiplier error protection		2	Division and multiplication ratio which are set up with the command pulse counts per single turn and the1st and the 4th numerator/denominator of the electronic gear are not appropriate. The command pulses per 0.167 ms multiplied by the command division and multiplication ratio exceeds 3000 Mpps. The command pulse input fluctuates. Noises mixed with the command pulse input cause counting error. Backlash correction function enabled (Pr 7.04 bit 1 - 0 is not 0), Pr 7.05 "Backlash Correction Amount" The setting value is not appropriate.	• Set the command division and multiplication ratio to a value as small as possible e.g. between 1/1000 and 1000. • Check the setup value of electronic gear. • If possible, use the line driver I/F. • Set Pr5.32 (setting of max. command pulse input) to a value less than 1000 and enable digital filter. • Check Pr 7.05 "Backlash Correction Amount."
Limit of pulse replay protection	28	0	The output frequency of pulse regeneration has exceeded the limit.	• Check the setup values of Pr0.11 and 5.03. • To disable the detection, set Pr5.33 to 0.
Deviation counter overflow protection	29	0	Position deviation value of the encoder pulse standard has exceeded 2^{30}-1 (1073741823).	• Check that the motor follows the position command. • Check that the output toque has not saturated on torque monitor. • Make a gain adjustment. • Maximize Pr0.13 “The 1st torque limit setup” and Pr5.22 “The 2nd torque limit setup” . • Make a connection of the encoder as described in the wiring diagram.
*Counter overflow error protection 1		1	The value of absolute encoder (absolute external scale) position [pulse units] / electronic gear ratio has exceeded ± 2^{31}(2147483648), in position information initialization process after closing control power supply under absolute mode when block operations is valid	• Confirm the operating range of absolute encoder (absolute external scale) position and review the electronic gear ratio.
*Counter overflow error protection 2	29	2	Value of positioning deviation has exceeded ± 2^{30}-1(1073741823) in pulse units. Or the value ofpositioning deviation has exceeded ± 2^{30} (1073741824) in command units.	• Confirm that motor rotates in accordance with the positioning command. • Confirm that output torque has not saturated by the torque monitor. • Adjust gain. • Set Pr.0.13 “1st torque limit setting” and Pr5.22 “2ndtorque limit setting” to maximum. • Connect encoder connection wiring as per the wiring diagram.
*Safety function error protection	31	0 2	Safety function has detected an error.	In case of the repeated occurrence, because failure is possible, replace the servo driver. Return to a dealer for investigation (repair).

Protective function	Error code No. Main	Error code No. Sub	Causes	Measures
*I/F overlap allocation error 1 protection	33	0	Input signals (SI1, SI2, SI3, SI4, SI5) are assigned with two functions.	Allocate correct function to each connector pin.
*I/F overlap allocation error 2 protection		1	Input signals (SI6, SI7, SI8, SI9, SI10) are assigned with two functions.	
*I/F input function number error 1		2	Input signals (SI1, SI2, SI3, SI4, SI5) are assigned with undefined number.	
*I/F input function number error 2	33	3	Input signals (SI6, SI7, SI8, SI9, SI10) are assigned with undefined number.	Allocate correct function to each connector pin.
*I/F output function number error 1		4	Output signals (SO1, SO2, SO3) are assigned with undefined number.	
*I/F output function number error 2		5	Output signals (SO4, SO5, SO6) are assigned with undefined number.	
*Counter clear allocation error		6	Counter clear function is assigned to a signal number other than SI7.	
*Command pulse inhibition input allocation error		7	Command pulse inhibit input function is assigned to a signal number other than SI10.	
Motor working range setup error protection	34	0	The motor has exceeded the motor working range set to Pr5.14 “Allowable motor operating range setting” against the position command input range. 1) Gain is not appropriate. 2) Pr5.14 setup value is low. 3) When Pr6.97(Function expansion setting 3) bit 2=1, Err34.0 compulsory occurrence condition is satisfied.	1) Check the gain (balance between position loop gain and speed loop gain) and inertia ratio. 2) Increase the setup value of Pr5.14. Or, Set Pr5.14 to 0 to disable the protective function. 3) Modification of setup condition and operation condition, please refer to the cautions written on "Allowable motor operating range protection(Err 34.0)" in P.6-22.
* EEPROM parameter error protection	36	0 1	Data in parameter storage area has been damaged when reading the data from EEPROM at power-on.	• Set up all parameters again. • If the error persists, replace the driver (it may be a failure.) Return the product to the dealer or manufacturer.
* EEPROM check code error protection	37	0 1 2	Data for writing confirmation to EEPROM has been damaged when reading the data from EEPROM at power-on.	Replace the driver. (it may be a failure). Return the product to a dealer or manufacturer.

Note

- When protective function marked with * in the protective function table is activated, it cannot be disabled by the alarm clear input (A-CLR). To return to the normal operation, turn off power, remove the cause, and then turn on power again.

Protective function	Error code No. Main	Error code No. Sub	Causes	Measures
Drive prohibition input protection	38	0	Both positive and negative direction drive prohibition inputs (POT and NOT) have been turned ON at Pr5.04 "Over-travel inhibition input setting" =0. Either positive direction drive prohibition input or negative direction drive prohibition input has been turned ON at Pr5.04=2.	• Check that there is no error in the switches, wires and power supply connected to the positive direction/negative direction drive prohibition input. Check particularly that start-up of the power supply for the control signal (DC12 to 24 V) is not slow.
Analog input 1 (AI1) excess protection	39	0	The voltage more than the value set in Pr4.24 "Analog input 1 (AI1) excess setup" has been applied to analog input 1.	• Correctly set Pr4.24 "Analog input 1 (AI1) excess setup." Check the connection of I/F connector. • Set Pr4.24 to 0 and disable the protective function.
Analog input 2 (AI2) excess protection		1	The voltage more than the value set in Pr4.27 "Analog input 2 (AI2) excess setup" has been applied to analog input 2.	• Correctly set Pr4.24 "Analog input 1 (AI1) excess setup." Check the connection of I/F connector. • Set Pr4.24 to 0 and disable the protective function.
Analog input 3 (AI3) excess protection		2	The voltage more than the value set in Pr4.30 "Analog input 3 (AI3) excess setup" has been applied to analog input 3.	• Correctly set Pr4.24 "Analog input 1 (AI1) excess setup." Clear the absolute encoder first to excute the alarm clear. Check the connection of I/F connector. • Set Pr4.24 to 0 and disable the protective function.
Absolute system down error protection	40	0	The power supplies and battery powers to absolute encoder were shut down, and the built-in capacitor voltage dropped below specified value. Caution Once this error occurs, the alarm cannot be cleared until the absolute encoder is reset.	After connecting the power supply for the battery, clear the absolute encoder. • If you use the incremental system Pr 0.15 "sets the absolute encoder " is set to 1.
*Absolute counter over error protection	41	0	Multi-turn counter of the absolute encoder has exceeded the specified value.	• Set Pr0.15 to 2 to ignore the multi-turn counter over. • Limit the travel from the machine origin within 32767 revolutions.
Absolute over-speed error protection	42	0	When using absolute encoder 1) During a power failure, when only battery power is supplied, the motor rotational speed has exceeded the specified value. 2) During normal operation, for some reason, the power of encoder has been shut down, and the rotational speed has exceeded the specified value. Caution Once this error occurs, the alarm cannot be cleared until the absolute encoder is reset.	1) Check the external driving force for motor and the rotational speed at the time, and operate to make the speed below specified value. 2) The mode was switched to a power failure mode during normal operation. ・Check the power supply voltage of encoder side(5V ± 5 %) ・Check the connection of connector X6.

Protective function	Error code No. Main	Error code No. Sub	Causes	Measures
*Absolute single turn counter error protection/ incremental single turn counter error protection	44	0	Absolute encoder has detected a single turn counter error. Serial incremental encoder has detected an error in the incremental counter value of single turn counter. (between z-phase signals)	Replace the motor.
* Absolute multi-turn counter error protection/ incremental counter error protection	45	0	Absolute encoder has detected a multi-turn counter error. Serial incremental encoder has detected an error in the incremental counter values between CS signals.	Replace the motor. • If you use the incremental system Pr 0.15 "sets the absolute encoder " is set to 1.
* Absolute status error protection	47	0	When power is turned on, absolute encoder has been rotated at the specified value or above.	Arrange so as the motor does not run at power-on.
* External scale wiring error protection	50	0	Communication between the external scale and the driver has been interrupted in certain times, and disconnection detecting function has been triggered.	• Make a wiring connection of the external scale as per the wiring diagram. • Correct the miswiring of the connector pins.
* External scale communication data error protection		1	Communication error has occurred in data from the external scale. Mainly data error due to noise. External scale cables are connected, but communication date has some error.	• Secure the power supply for the external scale of DC5 ± 5 % (4.75 V to 5.25 V)...pay attention especially when the external scale cables are long. • Separate the external scale cable and the motor cable if they are bound together. • Connect the shield to FG...refer to wiring diagram.
* External displacement sensor communication data error protection		2	External displacement sensor communication has no error, but error occurred in data. External displacement sensor communication data error mainly due to noise.	
* External scale status 0 error protection	51	0	Bit 0 of the external scale error code (ALMC) has been turned to 1. Check the specifications of the external scale.	Remove the causes of the error, then clear the external scale error from the front panel. And then, shut off the power to reset.
* External scale status 1 error protection		1	Bit 1 of the external scale error code (ALMC) has been turned to 1. Check the specifications of the external scale.	
* External scale status 2 error protection	51	2	Bit 2 of the external scale error code (ALMC) has been turned to 1. Check the specifications of the external scale.	Remove the causes of the error, then clear the external scale error from the front panel. And then, shut off the power to reset.
* External scale status 3 error protection		3	Bit 3 of the external scale error code (ALMC) has been turned to 1. Check the specifications of the external scale.	
* External scale status 4 error protection		4	Bit 4 of the external scale error code (ALMC) has been turned to 1. Check the specifications of the external scale.	
* External scale status 5 error protection		5	Bit 5 of the external scale error code (ALMC) has been turned to 1. Check the specifications of the external scale.	Remove the causes of the error, then clear the external scale error from the front panel. And then, shut off the power to reset.

Protective function	Error code No. Main	Error code No. Sub	Causes	Measures
* A-phase wiring error protection	55	0	A-phase wiring in the external scale is defective, e.g. discontinued.	When using serial communication type external displacement sensor, please change the setting value of Pr3.23 external displacement sensor type selection to 1 : serial communication type(incremental specification) or 2 : serial communication type(absolute specification).
* B-phase wiring error protection		1	B-phase wiring in the external scale is defective, e.g. discontinued.	When using serial communication type external displacement sensor, please change the setting value of Pr3.23 external displacement sensor type selection to 1 : serial communication type(incremental specification) or 2 : serial communication type(absolute specification).
* Z-phase wiring error protection	55	2	Z-phase wiring in the external scale is defective, e.g. discontinued.	When using serial communication type external displacement sensor, please change the setting value of Pr3.23 external displacement sensor type selection to 1 : serial communication type(incremental specification) or 2 : serial communication type(absolute specification).
U-phase current detector error protection	70	0	U-phase current offset error is detected.	• Turn off the power once, then re-enter. • If error repeats, this might be a failure. Stop using the products, and replace the motor and the driver. Return the products to the dealer or manufacturer.
W-phase current detector error protection		1	W-phase current offset error is detected.	
CCWTL anomaly protection	71	0	11 V or more at analog input 2 or -11 V or less was applied.	• Check the connection status of the I/F connector. • Turn the power off and then on again.
CWTL anomaly protection		1	11 V or more at analog input 3 or -11 V or less applied	
Thermal error protection	72	0	Thermal protector error is detected.	
RS232/RS485/ Modbus communication timeout protection	80	0	While ensuring RS232/RS485/Modbus execution right, RS232/RS485/Modbus communication against own axis has not been received for more than the set time.	• Set Pr5.40 " RS232/RS485/Modbus communication timeout period" to 0 to be disabled or to appropriate time. • Check the connection of RS232/RS485/ Modbus communication.
RS232/RS485/ Modbus communication continuous error protection	83	2	The reception error status becomes continuous more than the number of times set in Pr7.90 "RS232/ RS485/Modbus communication continuous reception error detection count" during RS232/RS485/Modbus communication. Note) The software version of function extension 11 detects alarms in intermittent reception error conditions during RS232/RS485/Modbus communication.	• Check the wiring of the communication cable. • SCheck if excessive noise is applied to the communication cable. • Check if there is disconnection in the communication cable.
Forced alarm input protection	87	0	Forced alarm input (E-STOP) is applied.	Check the wiring of forced alarm input (E-STOP).

Note

• When protective function marked with * in the protective function table is activated, it cannot be disabled by the alarm clear input (A-CLR). To return to the normal operation, turn off power, remove the cause, and then turn on power again.

Protective function	Error code No. Main	Error code No. Sub	Causes	Measures
* Encoder data recovery abnormal protection	92	0	Initialization process of internal position information has not conducted normally under absolute and semi-closed control mode.	• Secure encoder power supply voltage at DC5V ± 5% (4.75 to 5.25V). Care must be taken when the encoder lines are lengthy. • If motor wires and encoder wires are bundled together, separate them. • Connect shield to FG.
* External scale data recovery error protection		1	Internal position information initialization error under full-closed control and absolute mode with block operation enabled.	• Secure external scale power supply voltage of 5 VDC ± 5% (4.75 to 5.25 V). Please take extra care in case the cable connecting the external scale is long. • In case the motor line and the external scale connecting cable are bundled together, separate them. • Connect shield to FG. Refer to external scale connecting diagram
* Multi-rotation upper limit value inconsistency error protection		3	At continuous rotating absolute encoder function, there was a disagreement between the upper-limit value of encoder multi-turn data and the upper-limit value of driver parameter multi-turn data.	• Please confirm the set values of parameters. • Reclose the control power supply when this occurs immediately after closing the control power supply. (This is not an abnormality.)
* Parameter setup error 1	93	0	1) Electronic gear ratio exceeds the allowable range. 2) When a block operation was enabled(Pr 6.28 is non 0), Modbus connection was disabled (Pr 5.37 is 0). 3)When the backlash correction function is enabled (Pr 7.04 = bit 1 - 0 is other than 0) and no block operation is performed (Pr 6.28 = 0), the value of Pr 7.18 "backlash correction amount holding range" converted to pulse units by the electronic gear ratio exceeds 2147483647.	• Check the setting value of the parameter. 1) When a block operation was enabled (Pr 6.28 is non 0), Electronic gear ratio must be in the range 1/1000 to 8000. 2) When a block operation was enabled (Pr 6.28 is non 0), Modbus connection was disabled (Pr 5.37 is 0). 3) Check the setting of Pr 7.18 "Retention range of backlash compensation" and electronic gear ratio.
Block data setting error protection		1	1)The blocking action was activated by setting the velocity, acceleration and deceleration to 0 or by setting the acceleration and deceleration to values exceeding 4294967295 [command unit/s² . 2)The conditional branch command does not correspond to the comparison target. 3)The command for the specified block data is not defined. 4)In addition, there is an error in the block data setting.	1)Check speed, acceleration and deceleration values. 2)Check if there are any problems with the conditional branch command or comparison target. 3)Check if there are any problems with the block data. Check if there are any problems with the block number specification. 4)Check if there are any problems with the block data setting.
* Parameter setting error protection 2		2	External scale ratio has exceeded the allowable range (1/160000 to 160000 times)	• Please confirm the set values of parameters. • Use external scale ratio in the range of 1/40 to 1280 times
* External scale connection error protection		3	Set value for Pr3.23 “External scale type selection” and the connected serial communication type external scale type to not match.	• Set Pr3.23 to match the type of the connected external scale

Protective function	Error code No. Main	Error code No. Sub	Causes	Measures
* Parameter setting error protection 6	93	8	• Set the motor not belong to 23 bit to infinite rotation absolute mode. • Block operation origin offset(Pr60.49) setup value beyond the range in origin offset valid setting (Pr60.48 bit 1=1) under infinite rotation absolute mode when block operation is valid(Pr6.28 ≠ 0).	• Please confirm the set values of parameters.
Block operation error protection	94	0	1)During the execution of movement system command (During the execution of position command creation process), a new movement system command has been executed. 2)During block operation, a new block number was designated to start. 3)Although it was servo-off, a block operation was started.	1)Check whether the block operation sequence does not have any problems. 2)Check whether the host sequence does not have any problems. 3)Check whether the host sequence does not have any problems.
Homing error protection		2	1)Return to origin command of block operation was executed in the absolute mode. 2)In the return to origin operation of the block operation, the prohibited driving input in the return to origin direction was turned ON, and the prohibited driving input in the opposite direction to the return to origin direction was turned ON during the reverse operation. 3)In the return to origin operation of the block operation, both POT and NOT of the driving prohibited input were turned on. 4) Relative or absolute positioning was performed in the uncompleted return to origin state. 5)When 1 (HOME + Z phase) and 2 (HOME only) are set as the detection method of the return to origin command, HOME, POT and NOT are not assigned to the input signal. 6)When 2 (HOME only) is set as the detection method of the original return command, HOME is not assigned to SI4.	1)Check the block data setting or the absolute mode setting for any problems. 2)Check if there are any problems in the arrangement relation between the driving prohibited input and the origin (Sensor input, Z-phase). 3)Check if there are any problems in the arrangement relation between the driving prohibited input. 4)Check if there are any problems in the block data setting. 5)Set the function assignment for the connector pin correctly. 6)Set the function assignment for the connector pin correctly.
Homing error protection2		3	1)Return to origin command of block operation was executed in the absolute mode.	1)Check the block data setting or the absolute mode setting for any problems.

Note
• When protective function marked with * in the protective function table is activated, it cannot be disabled by the alarm clear input (A-CLR). To return to the normal operation, turn off power, remove the cause, and then turn on power again.

Protective function	Error code No.		Causes	Measures
	Main	Sub		
* Motor automatic recognition error protection	95	0 to 4	The motor and the driver has not been matched.	Replace the motor which matches to the driver.
* Control unit error protection 1	96	2	Control circuit has malfunctioned due to excess noise or other causes. Some error has occurred inside of the driver, which triggered self-diagnosis function of the driver.	・Turn off power once, and turn on again. ・Even so, if an error indication appears, failure is possible. Discontinue to use and replace the motor and servo driver. Return to a dealer for investigation(repair).
* Control mode setting error prtection	97	0	1)Block operation was enabled except for position control (Pr 0.01 = 0) or full close control (Pr 0.01 = 6). 2)When Pr 6.28 "Special function setting" = 4 (block operation enabled by starting input signal (pulse train enabled)) was set, Pr 0.15 "Absolute encoder setting" = 1 (increment mode) was set. (Software version 9 and later (Ver 1.14 and later) does not detect alarms due to this reason.)	1)Check the settings of Pr 0.01 "Control mode setting" and Pr 6.28 "Special function selection." 2)Check the settings of Pr 6.28 "Special function setting" and Pr 0.15 "Absolute encoder setting."
Hardware self-diagnostic anomaly protection 1	98	5	The current detector has gone wrong.	・Research (repair) and return to the store of purchase.
* Other error	Other No.		Control circuit has malfunctioned due to excess noise or other causes. Some error has occurred inside of the driver while triggering self-diagnosis function of the driver.	• Turn off power once, and turn on again. • Even so, if an error indication appears and an error occurs, failure is possible. Discontinue the use and replace the motor and servo driver. Return to a dealer for investigation (repair).

Time characteristics of Err16.0 (Overload protection)

MSMF Overload protection time characteristics

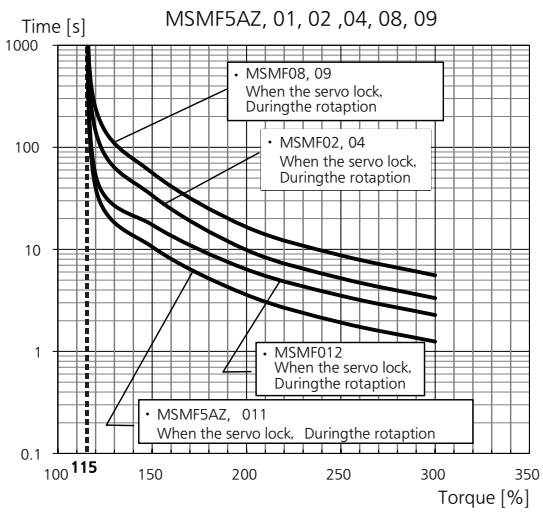

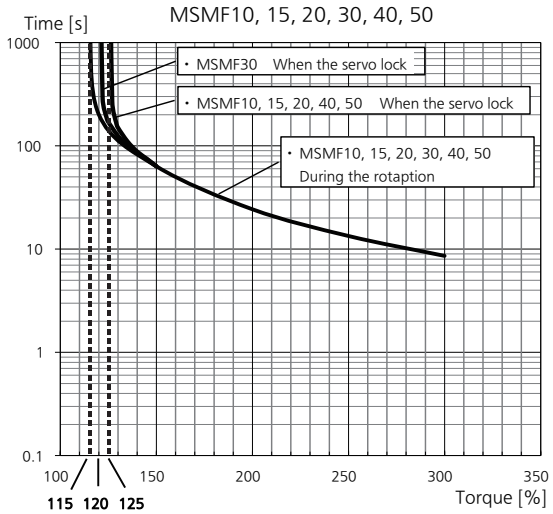

MQMF Overload protection time characteristics

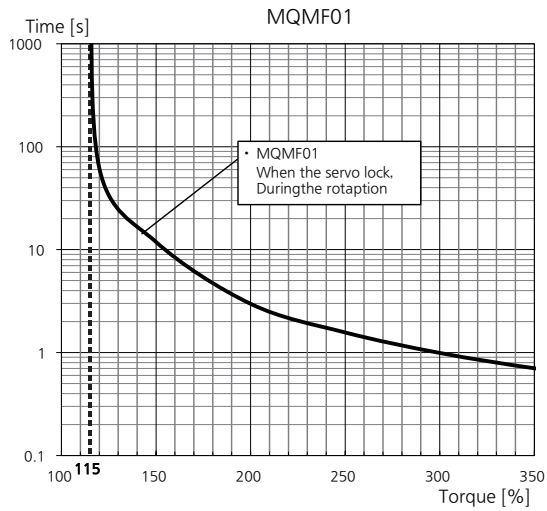

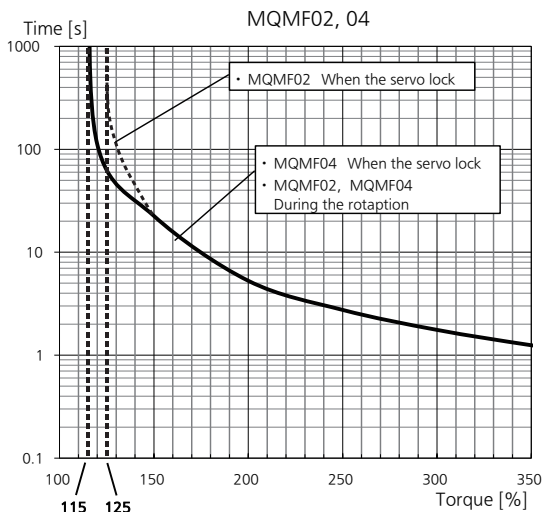

Caution Use the motor so that actual torque stays in the continuous running range shown in "S-T characteristic" of the motor. For the S-T characteristics, see P.7-61 Motor characteristics (S-T characteristics).

Time characteristics of Err16.0 (Overload protection)

MDMF Overload protection time characteristics

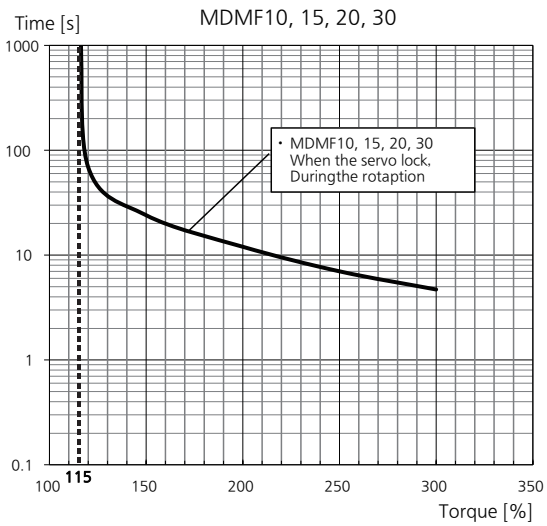

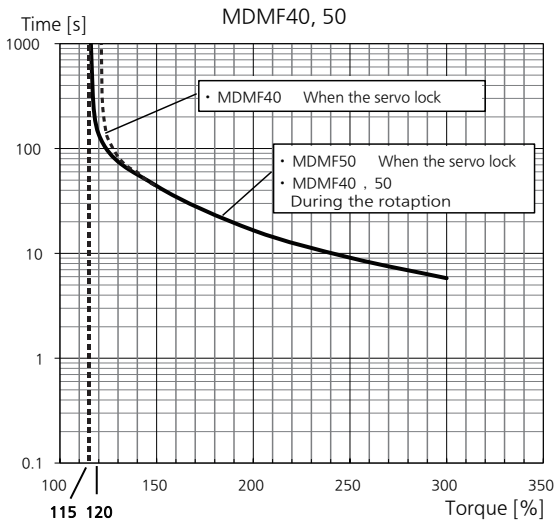

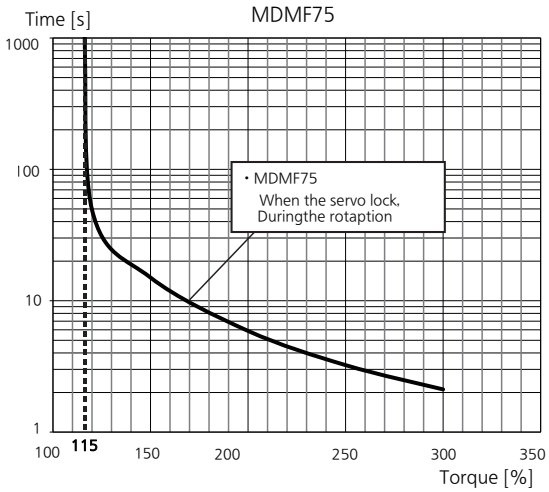

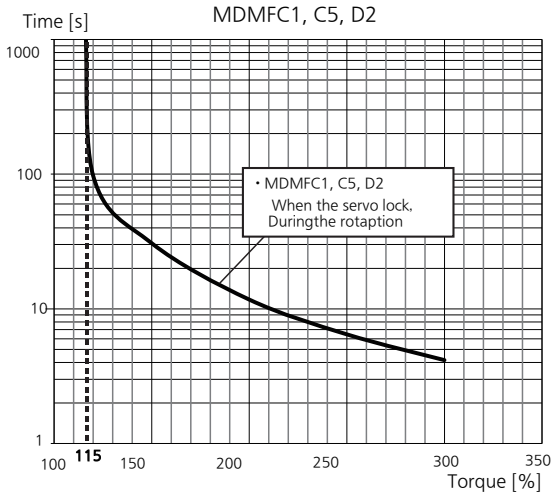

Caution Use the motor so that actual torque stays in the continuous running range shown in "S-T characteristic" of the motor. For the S-T characteristics, see P.7-61 Motor characteristics (S-T characteristics).

Time characteristics of Err16.0 (Overload protection)

MGMF Overload protection time characteristics

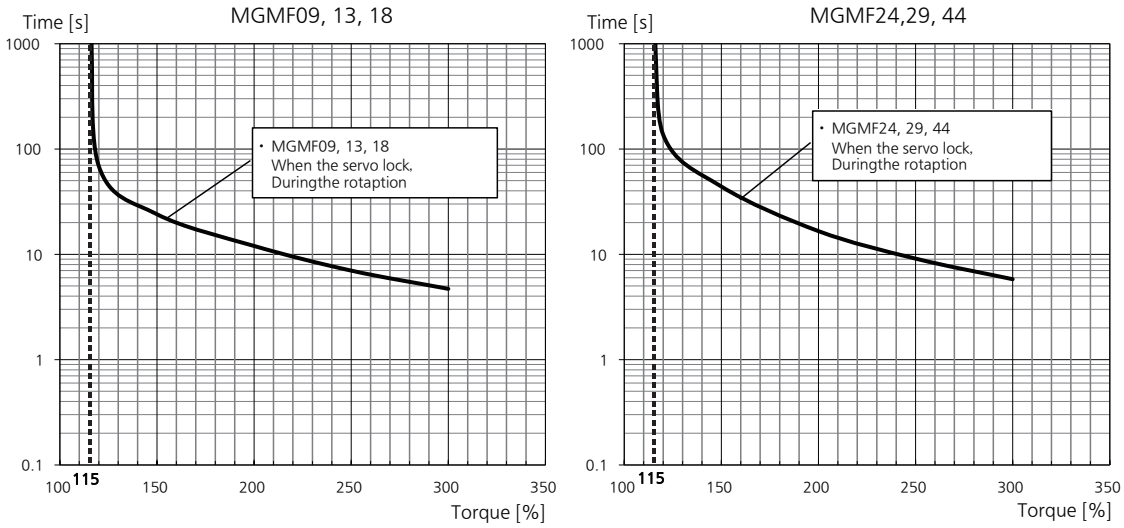

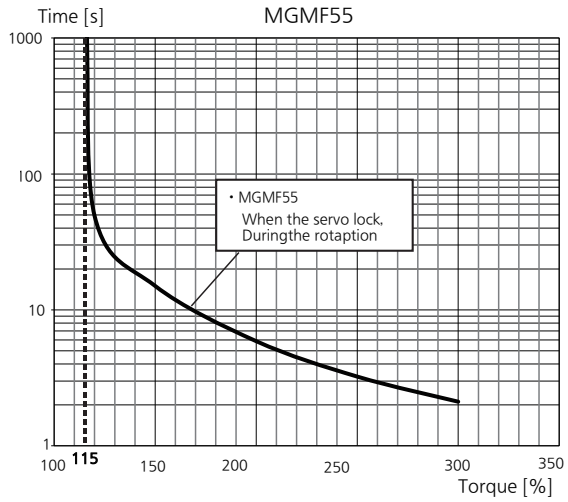

Caution Use the motor so that actual torque stays in the continuous running range shown in "S-T characteristic" of the motor. For the S-T characteristics, see P.7-61 Motor characteristics (S-T characteristics).

Time characteristics of Err16.0 (Overload protection)

MHMF Overload protection time characteristics

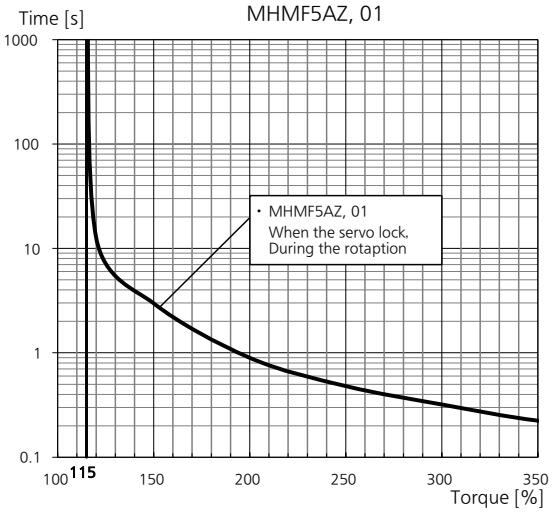

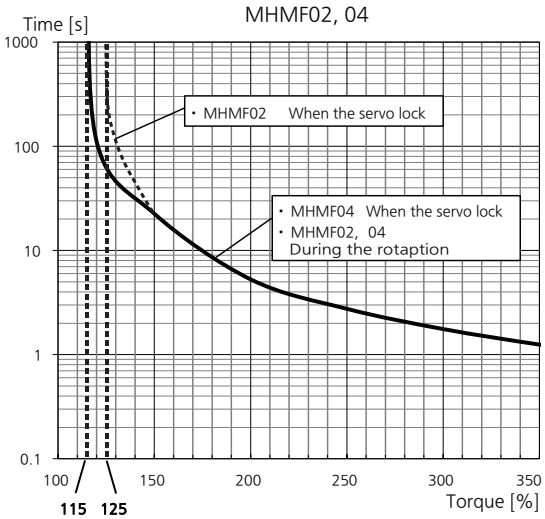

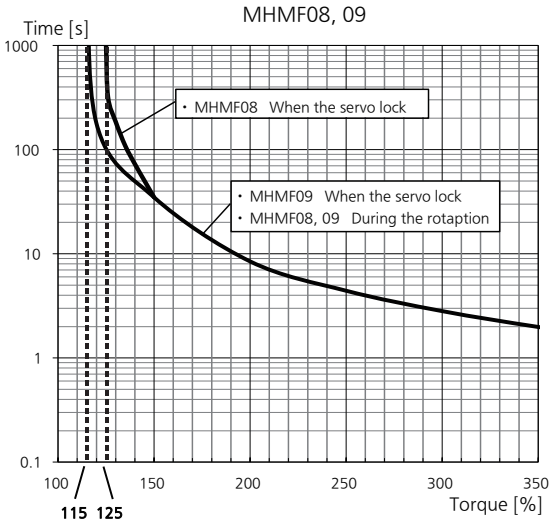

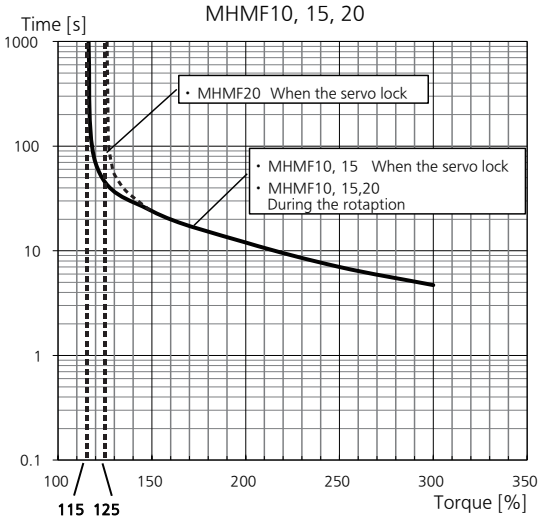

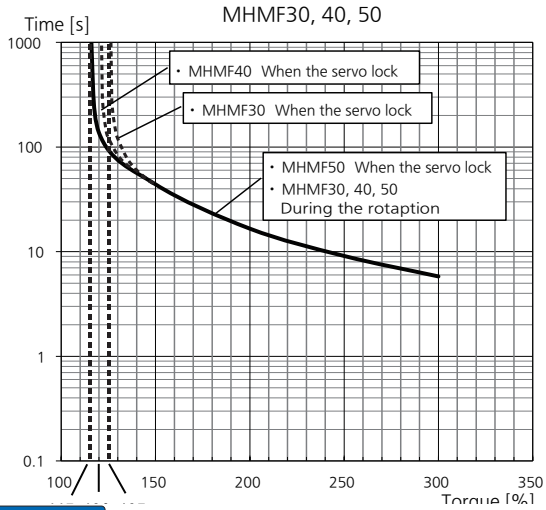

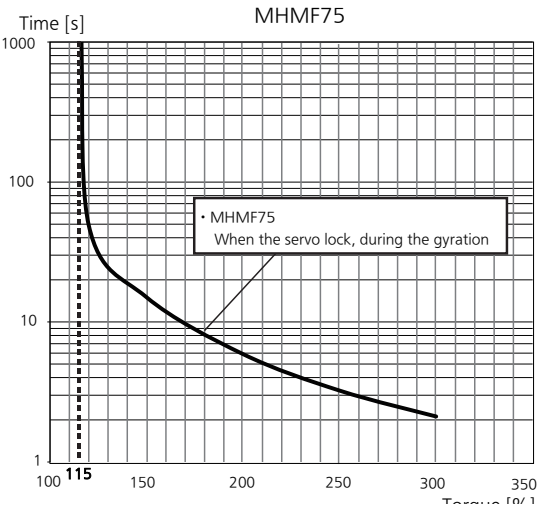

Caution Use the motor so that actual torque stays in the continuous running range shown in "S-T characteristic" of the motor. For the S-T characteristics, see P.7-61 Motor characteristics (S-T characteristics).

Setting Pr5.13 Over-speed level setup and Pr6.15 2nd over-speed level setup

In a specific condition, the motor will not stop normally when the immediate stop function is activated.
For example, as shown below, when the motor speed exceeds Pr5.13 Over-speed level setup, and immediate stop function is activated, the motor speed cannot be controlled.
As a safety measure against over-speed, Err26.1 (2nd over-speed protection) is provided. Because Err26.1 is an immediate stop unsupported alarm, it shuts off motor current and stops the motor by following sequence operation B of alarm process. In Pr6.15 2nd over-speed level setup, set the allowable over-speed level.
Set Pr5.13 to the lower value compared with that of Pr6.15 to have sufficient margin. When both settings are the same or margin is small, Err26.0 and Err26.1 may be detected at the same time. In this case Err26.0 is displayed, but because Err26.1 is also generated internally, immediate stop unsupported alarm is given priority and immediate stop is not performed.
Furthermore, if the setup value of Pr6.15 is lower than that of Pr5.13, Err26.1 is generated before Err26.0, disabling immediate stop.

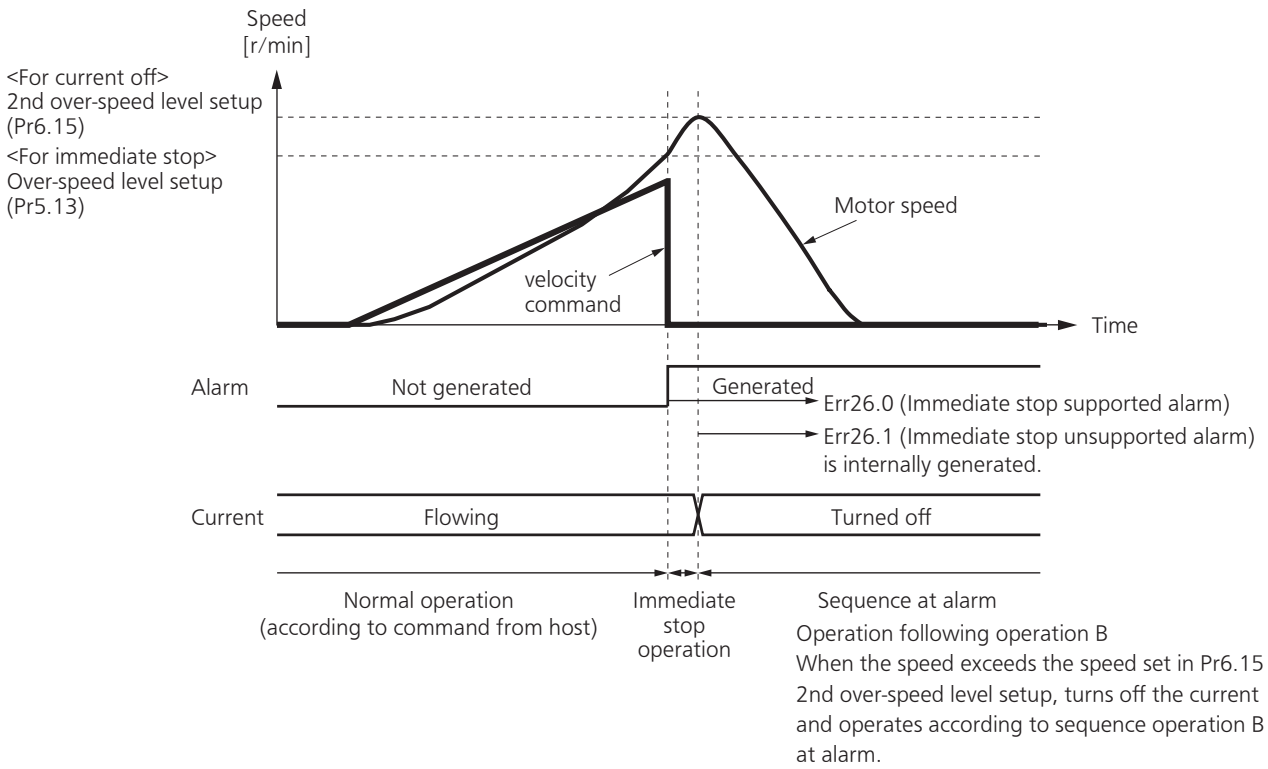

Related page • P.4-7 to P.4-87... "Details of parameter"

Allowable motor operating range setting function(Err34.0)

1) Outline

The motor is set for the range of the position command input by Pr5.14 "Allowable motor operating range."

When the motor exceeds the allowable operating range of motor, the motor is able to be stopped by issuing an alarm by the allowable motor operating range setting protection.

2) Applicable range

This function works under the following conditions.

	Conditions under which the software limit works
Control mode	• Position control, Full-closed control
Others	• To be in the servo ON state. • Elements other than control parameters, such as deviation counter clear command input prohibition, torque limit, etc. are properly set and the motor is free of obstacle to normal motor rotation.

3) Cautions

- Take care that this function is not the protection against the abnormal position command.
- When the allowable motor operating range setting protection is activated, the motor is decelerated and stopped in conformity to Pr5.10 "Sequence at alarm."
  Because depending on a load, the load may come in contact with the machine edge and break during deceleration, the range of setting of Pr5.14 shall be the setting with the deceleration action taken into account.
- Err34.0 "Allowable motor operating range abnormal protection" detection processing will be invalid when the allowable motor operating range ([Encoder pulse or [External pulse] units] exceeds -2^{31} to $2^{31}-1$. *1
- Position command input range and actual motor position for judgment managed inside the amplifier will be cleared and Err34.0 "Allowable motor operating range abnormal protection" detection processing will become invalid, in case any of the following conditions are satisfied:
  - Servo OFF state
  - Speed control state or torque control state
  - During motor test run conducted from front panel
  - During frequency response characteristics are being measured by Set-up support software (PANATERM)
  - Deviation clear state (When deviation counter clear (CL) is entered or when the deviation is cleared in various sequence actions)
  - During test run by Set-up support software (PANATERM) or start of Z-phase search operation
  - Pr5.14 = 0
  - When the value of Pr5.14, under full-close control, satisfies the following formula (in case the value of Pr5.14 converted into [External scale pulse] units exceed $\pm 2^{31}$) *1
    Pr5.14 > $((2^{31}-1) * \text{Pr3.24} * 10) / (\text{encoder resolution} * \text{Pr3.25})$

*1 However in such cases, by enabling the following setting, Err34.0 will occur com pulsory regardless of actual motor position for judgment.
Pr6.97 "Function expansion setting 3"
bit2 Expansion of Allowable motor operating range abnormal protection
0: Invalid, 1: Valid

4) Example of movement

(1) When no position command is entered (Servo-ON status),
The motor movable range will be the travel range which is set at both sides of the motor with Pr5.14 since no position command is entered. When the load enters to the Err34.0 occurrence range (oblique line range), software limit protection will be activated.

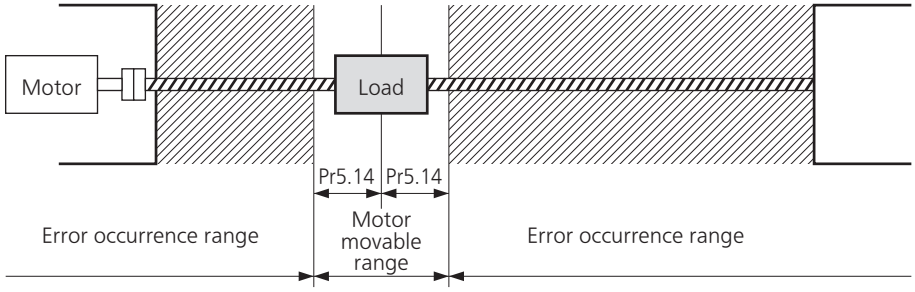

(2) When the load moves to the right (at Servo-ON),
When the position command to the right direction is entered, the motor movable range will be expanded by entered position command, and the movable range will be the position command input range + Pr5.14 setups in both sides.

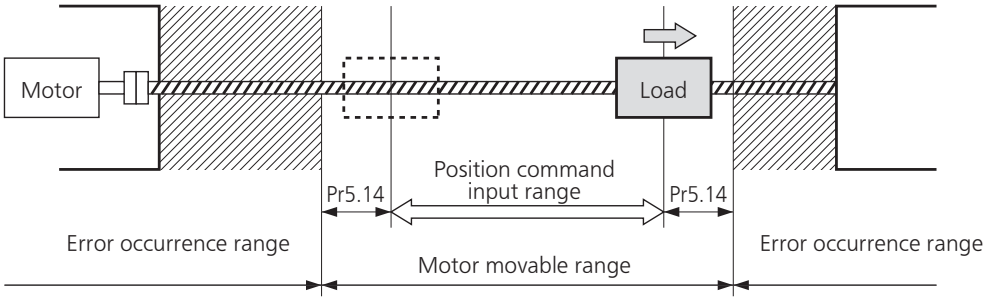

(3) When the load moves to the left (at Servo-ON),
When the position command to the left direction, the motor movable range will be expanded further.

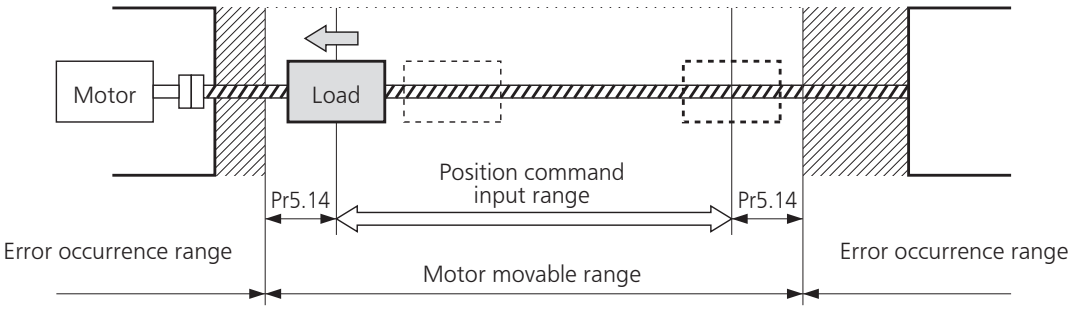

5) Condition under which the position command input range is cleared
The position command input range will be 0-cleared under the following conditions.

- when the power is turned on.
- while the position deviation is being cleared (Deviation counter clear is valid, Pr5.05 (Sequence at over-travel inhibition) is 2 and over-travel inhibition input is valid.)
- At the beginning and ending of trial run via communication.

Related page • P.4-7 to P.4-87 "Details of parameter"

1. When in Trouble

Fall prevention function in the event of alarms

Outline

When the servo driver alarms, the motor will stop energizing, and the vertical axis such as the manipulator will drop from when the brake release output(BRK-OFF) is turned OFF to when the external brake actually begin to work.
This function can prevent the drop when alarming by setting the alarm time sequence to immediate stop. This function cannot be used when the alarm that does not respond to an immediate stop.

Related parameters

Class	No.	Title	Function
5	10	Sequence at alarm	To set the state during deceleration and after stopping when alarm is generated. Setting to 4 through 7 enables an immediate stop.
6	10	Function expansion setting	To set the bit concerning drop prevention function. bit10: Drop prevention function at the time of alarm Position deviation processing 0: Invalid (retention) 1: Valid (clear) When the Slow stop function is made enabled, usually set to 1. Note: The lest significant bit is designated as bit0.
6	51	Immediate stop completion wait time	When alarm that must respond to an immediate stop is generated, after turning OFF the brake release output (BRK-OFF), set the time to maintain the motor energization. In the case of zero setting, the drop prevention function is disabled.

Content

- Drop prevention function action when alarm that must respond to an immediate stop

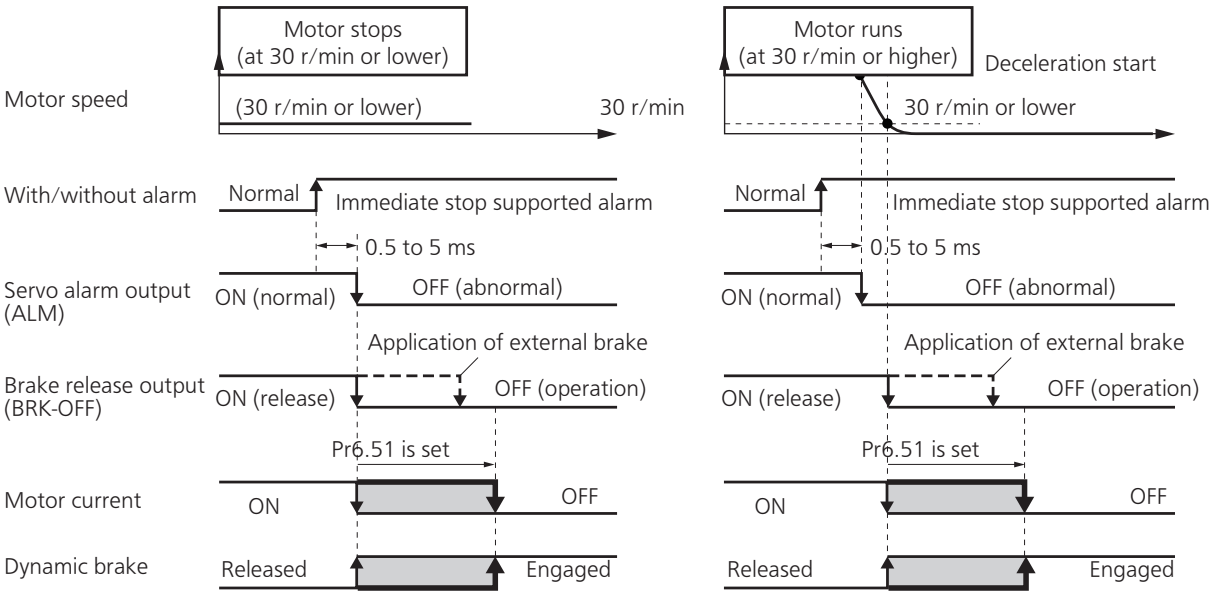

Note In the event that the drop prevention function is enabled when alarm is generated, set Pr5.10 “Sequence at alarm” to 4, Pr6.10 “Function expansion setting” bit 10 to “1,” and a value longer than the time when brake release output (BRK-OFF) is turned OFF and external brake actually operates to Pr6.51 “Immediate stop end wait time.”

1. When in Trouble

Slow stop function

Outline

When the alarm that must respond to an immediate stop comes on, drop in the vertical axis, etc. is prevented by keeping the motor energized for the time from when the brake release output (BRK-OFF) is turned OFF to when the external brakes actually begin to work.

Scope of application

This function cannot be applied unless the following conditions are satisfied.

	Condition for activation of slow stop function
Control mode	Position control (Pr0.01=0)
Others	• Servo-ON state • Elements other than control parameters, such as torque limit, etc. have been appropriately set, without any problems in normal operations. • Block operation is set to “invalid.”

Related parameters

Class No.	Parameter name	Set range	Units	Functions
Pr5.56	Slow stop deceleration time setting	0 to 10000	ms/ (1000r/min)	Sets the deceleration time under slow stop. This function will become effective when Pr6.10 “Function enhancement setting” bit 15 is set to 1.
Pr5.57	Slow stop S-shape acceleration and deceleration setting	0 to 1000	ms	Sets the S-shape time for deceleration under slow stop. This function will become effective when Pr6.10 “Function enhancement setting” bit 15 is set to 1.
Pr6.10	Function enhancement settings	-32768 to 32767	–	bit 10: Fall prevention function, position deviation processing under alarm 0 :Invalid (maintain), 1: Valid (clear) Normally set to 1 to activate fall prevention function bit 15: Slow stop function 0 :Invalid, 1: Valid *Only valid in case position control is set (Pr0.01 = 0) and block operation is invalid (Pr6.28 = 0)
Pr6.14	Immediate stop time under alarm	0 to 1000	ms	Sets the allowable time for stopping when alarm is triggered for immediate stop. Exceeding this set value will trigger a forced alarm condition. In case the set value is 0 (zero), no immediate stop will be made, but an alarm condition will immediately occur. In case the slow stop function is to be used, set it to a length sufficiently longer than the maximum deceleration time, as the motor velocity will have a delay from the deceleration and stop command. * Please refer to (3) of this item for maximum deceleration time.

Contents

- Slow stop operation

The figure below indicates the case of slow stop operation under alarm.

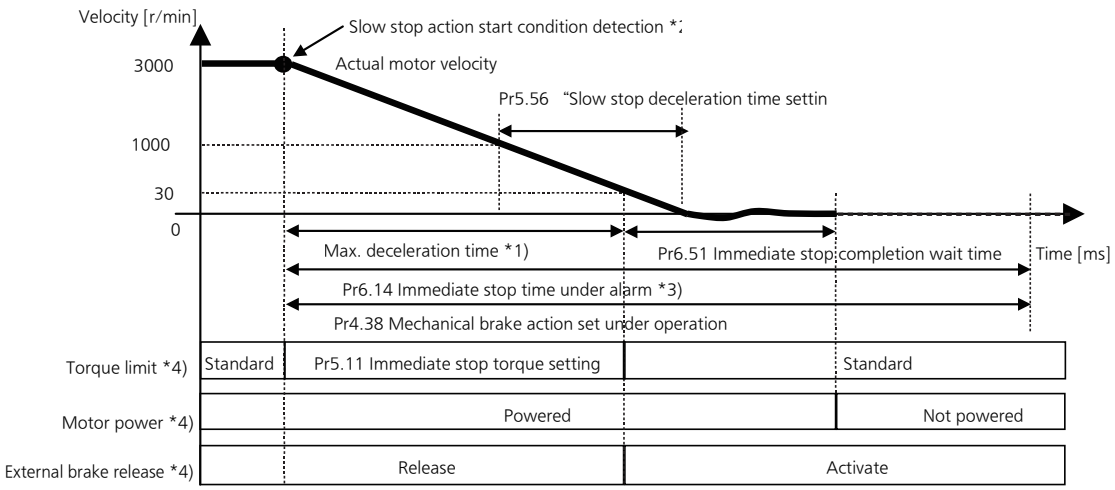

*1)The maximum deceleration time is approximately the value obtained by the following formula:

Maximum deceleration time [ms]

$$= \frac{\text{Maximum velocity under normal operation pattern [r/min]) x Pr5.56 [ms/(1000 r/min)]}}{1000} + \text{Pr5.57[ms]}$$

*2) To be the detection of following conditions:

- Drive prohibited input with slow stop function valid setting.
- Servo-OFF with slow stop function valid setting.
- Main power OFF with slow stop function valid setting.
- Immediate stop response alarm triggered with slow stop function valid setting.
  For immediate stop response alarm, refer to P.6-3.

*3) Please set Pr6.14 "Immediate stop time under alarm" to a value that is sufficiently long in length than the completion of slow stop operation. The stop judgment under slow stop operation is based on actual velocity. Therefore, the time required for the actual deceleration may take longer than the maximum deceleration time.
In the immediate stop operation from immediate stop response alarm, in case the immediate stop continuation duration exceeds Pr6.14 "Immediate stop time under alarm", an alarm state will be triggered regardless of the actual motor velocity.
Furthermore, immediate alarm condition will be triggered in case immediate stop non-response alarm is generated inside the driver during immediate stop.

*4) There will be a maximum variance of about 5 [ms] in the switching timing.

Note) Please maintain the main circuit power supply during the time of decelerated stop.

・S shape processing of slow stop operation

S shape process at the time of slow stop operation can be made by setting Pr5.57. Refer to the following figure to set Pr5.57.

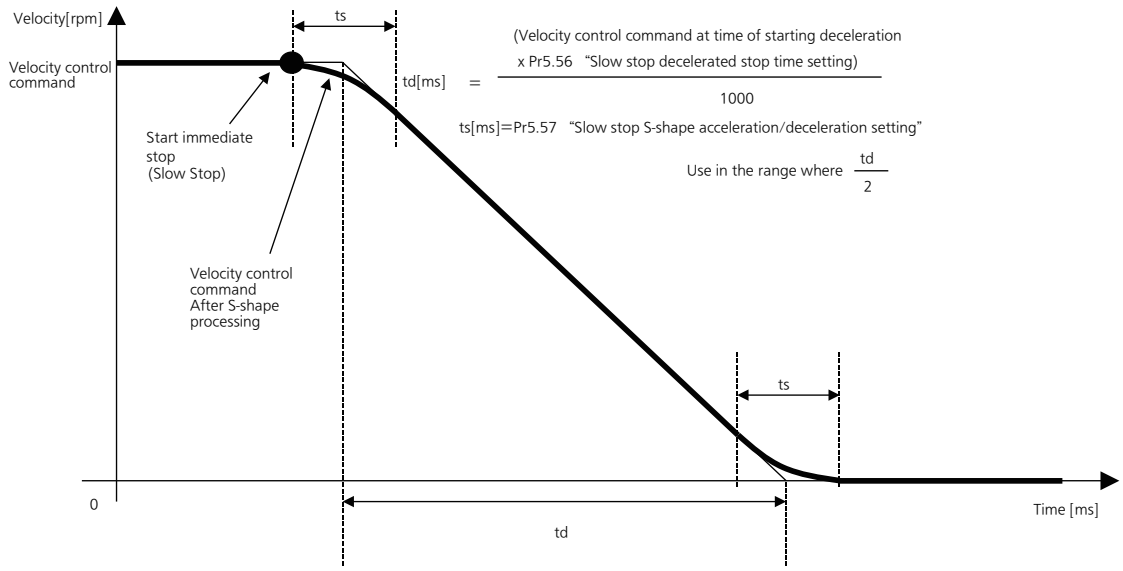

*) Velocity control command at the time of starting slow stop operation shall be calculated from the actual velocity.

・Braking distance

*When Pr 5.56 and Pr5.57 has been set, the braking distance under immediate stop will increase by approximately the following formula. Please confirm its influence on the actual machine operations, when using.

1) In case of linear deceleration (Pr5.57 =0)

Linear deceleration brake distance [revolution] Linear decelerating time [s]

$$= \frac{\text{(Velocity control command at time of starting deceleration [r/min])} \times \text{Pr5.56 [ms/(1000)[r/min]}}{1000 \times 1000}$$

Linear deceleration brake distance [revolution]

$$= \frac{\text{(Velocity control command at time of starting deceleration [r/min])} \times \text{Linear decelerating time [s]}}{60 \times 2}$$

$$= \frac{\text{(Velocity control command at time of starting deceleration [r/min])}^2 \times \text{Pr5.56 [ms/(1000)[r/min]}}{60 \times 2 \times 1000 \times 1000}$$

2) For S - shape deceleration (Pr5.57 ≠ 0)

S-shape deceleration braking distance [revolution]

$$= \text{Linear deceleration brake distance [revolution]} + \frac{\text{(Velocity control command at time of starting deceleration [r/min])} \times \text{Pr5.57 [ms]}}{60 \times 1000 \times 2}$$

Note) The above formulae are braking distances for the velocity control command only and the actual motor control delay has to be taken into account. Furthermore, in case the torque command under deceleration is restricted by immediate stop torque stetting, the braking distance will not be as per the formulae indicated above.

1. When in Trouble

Warning functions

When an error condition e.g. overloading occurs, the warning code is issued to indicate that the corresponding protective function will be triggered if suitable corrective action is not taken.
If use continues in a warning environment, it may stop, reduce life, or failure due to the protection function of the servo drive. Please do not use until the cause of the warning is ruled out.
The warning will be cleared as the cause of the error is removed. However, certain warning will remain latched for predetermined period as shown in the table below. To forcibly clear the warning, take the normal alarm clear procedure.If alarm clear input (A-CLR) is kept valid, all warnings are always cleared.

Warning No.	Warning name	Content	Pr6.27 *1	Pr4.40/ Pr4.41*2	Pr6.38/Pr6.39 corresponding bit *3
A0	Overload warning	Load factor is 85% or more the protection level.	○	1	Pr6.38 bit 7
A1	Over-regeneration warning	Regenerative load factor is 85% or more the level.	○	2	Pr6.38 bit 5
A2	Battery warning	Battery voltage is 3.2 V or lower.	Fixed at no time limit.	3	Pr6.38 bit 0
A3	Fan warning	Fan has stopped for 1 sec.	○	4	Pr6.38 bit 6
A4	Encoder communication warning	The number of successive encoder communication errors has exceeded the specified value.	○	5	Pr6.38 bit 4
A5	Encoder overheat warning *4	Encoder temperature has exceeded the specified value.	○	6	Pr6.38 bit 3
A6	Oscillation detection warning	Oscillation or vibration has been detected.	○	7	Pr6.38 bit 9
A7	Lifetime detection warning	The life expectancy of capacity or fan has dropped below specified value.	Fixed at no time limit.	8	Pr6.38 bit 2
A8	External scale error warning	The external scale has detected the warning.	○	9	Pr6.38 bit 8
A9	External scale communication warning	The number of successive external scale communication errors has exceeded the specified value.	○	10	Pr6.38 bit 10
AC	Deterioration diagnosis warning *6	Load characteristic estimates and torque command under constant speed has exceeded the set range.	○	22	Pr6.39 bit7
C3	Main power off warning	In case that Pr7.14 (Detection time of main power off warning) is 10 to 1999, the mains power between L1 and L3 has stopped instantaneously for more than the time prescribed in Pr7.14.	○	14	Pr6.38 bit 12

*1 The part "○" indicates Pr6.27 "Latched time of warning" and can set the time interval 1 to 10s or no time limit. Note that the battery warning and the end of life warning have "no time limit."

2 Through Pr4.40 "Warning output select 1" and Pr4.41 "Warning output select 2," select the warning issued as the warning output signal 1 (WARN1) and signal 2 (WARN2). In case of setting value 0, OR output of all warnings will be obtained. In addition, do not use the setup values other than those listed in the above table.

3 Each warning detection can be disabled by Pr6.38 "Warning mask setup" and Pr6.37 "Warning mask setting 2." The corresponding bits are indicated in the table. The warning detection will be disabled by bit=1.

4 Encoder thermal warning is effective only when 23 bit absolute encoder, 20 bit absolute encoder and 20 bit incremental serial encoder are used. If other encoders are used, it will be disabled.

5 Warnings can be cleared by using the alarm clear. While the alarm clear input (A-CLR) is kept ON, the all existing warnings are always cleared.

6 Invalidated when Pr6.97 "Function expansion setting 3" bit1 = 0.

2. Setup of gain pre-adjustment protection

Before starting gain adjustment, set the following parameters based on the conditions of use, to assure safe operation.

1) Setup of over-travel inhibit input

By inputting the limit sensor signal to the driver, the bumping against mechanical end can be prevented. Refer to interface specification, positive/negative direction over-travel inhibit input (POT/NOT). Set the following parameters which are related to over-travel inhibit input.

Pr5.04 Setup of over-travel inhibit input
Pr5.05 Sequence at over-travel inhibit

Related page P.3-42 (POT/NOT), P.4-52, P.4-53 (Pr5.04, Pr5.05)

2) Setup of torque limit

By limiting motor maximum torque, damage caused by failure or disturbance such as bite of the machine and collision will be minimized. To apply standardized limit through parameters, set Pr0.13 The 1st torque limit.

If the torque limit setup is lower than the value required during the actual application, the following two protective features will be triggered: over-speed protection when overshoot occurs, and excess positional deviation protection when response to the command delays.

By allocating the torque in-limit output (TLC) of interface specification to the output signal, torque limit condition can be detected externally.

Related page P.3-50 (TLC), P.4-15 (Pr0.13), P.4-58 (Pr5.21)

3) Setup of over-speed protection

Generates Err26.0 Over-speed protection when the motor speed is excessively high.

Default setting is the applicable motor maximum speed [r/min] × 1.2.

If your application operates below the motor maximum speed, set Pr5.13 Setup of over-speed level by using the formula below.

> Pr5.13 Setup of over-speed level = Vmax × (1.2 to 1.5)
> Vmax: motor maximum speed [r/min] in operating condition
> Factor in ( ) is margin to prevent frequent activation of over-speed protection.

When running the motor at a low speed during initial adjustment stage, setup the over-speed protection by multiplying the adjusting speed by a certain margin to protect the motor against possible oscillation.

Related page P.4-56 (Pr5.13)

(Continued ...)

4) Setup of the excess positional deviation protection

During the position control or full-closed control, this function detects potential excessive difference between the position command and motor position and issues Err24.0 " Position deviation excess protection" .

Excess position deviation level can be set by Pr0.14 "Position deviation excess setting." The detection position can be selected from command position deviation [pulse (command unit)] and encoder position deviation [pulse (encoder unit)] or full-closed deviation [pulse (external scale unit)] in Pr5.20 "Position setting unit selection" . (See the control block diagram) Default is set to 100000 [pulse (command unit)].

Because the position deviation during normal operation depends on the operating speed and gain setting, fill the values obtained from the equation below based on your operating condition and input the resulting value to Pr0.14.

4-1) In case two degree-of-freedom is set to valid (Pr6.47 bit 0 = 1)

• For Pr5.20 = 0 (Detection by command position deviation)

Pr0.14 "Excessive position deviation setting" = (P1 + P2 + P3 + P4) x (1.2 to 2.0) Coefficients in parenthesis are allowances to prevent frequent triggering of excessive position deviation protection

Position command smoothing accumulator pulse count: P1 = Vc × (set value for Pr2.22 / 10000) x 2

Position command FIR filter accumulator pulse count: P2 = Vc × (set value for Pr2.23 / 10000) / 2

Adjustment filter accumulator pulse count: P3 = Vc × (Set value for Pr6.48 / 10000)

Damping filter accumulator pulse count: P4 = Vc / (π × damping frequency [Hz])

VC : Maximum frequency of position command pulse [pulse (command unit)/s]

* Damping frequency is 1/10 of the set values for Pr2.14 (first), Pr2.16 (second), Pr2.18 (third) and Pr2.20 (fourth) and is calculated only when the set values are effective. In case multiple damping controls are valid, P4 shall be calculated for each damping filter and P4 shall be the total of the calculated values

.• For Pr5.20 = 1 (Detection by encoder position deviation or full-closed position deviation)

* In this case, the position deviation cannot be obtained through calculation formula. Set the value including allowance, by estimating the maximum value of encoder position deviation or full-closed position deviation (Pmax) from the actual operation waveform that could be used. Pr0.14 "Excessive position deviation setting" = Pmax × (1.2 to 2.0)

Note 1) Measure with the smallest value when switching position loop gain Kp.

Note 2) Setting of command filter and damping control will not have any effect in case Pr 5.20 = 1.

4-2) In case two degree-of-freedom control is invalid (Pr6.47 bit 0 = 0)

- For Pr5.20 = 0 (detection through command position deviation),

Pr0.14 "Position deviation excess setting" = Vc/Kp × (1.2 to 2.0) Vc: Maximum frequency of positional command pulse [pulse (command unit)/s] Kp: Position loop gain [1/s] Factor in ( ) is margin to prevent frequent activation of position deviation excess protection.

Note 3) When switching position loop gain Kp, select the smallest value for calculation.

Note 4) When using the positional command filter and damping control, add the following values.

Positional command smoothing filter: Vc × Filter time constant [s]

Positional command FIR filter: Vc × Filter time constant [s]/2

Damping control: Vc/(π × Damping frequency [Hz])

. • For Pr5.20 = 1 (Detection through encoder position deviation and full-closed position deviation)

Pr0.14 "Position deviation excess setting" = Ve/Kp × (1.2 to 2.0) Ve: Maximum operation frequency [pulse/s] in encoder unit or full-closed unit Kp: Position loop gain [1/s]

Note 5) NOTE 3) When switching position loop gain Kp, select the smallest value for calculation.

Note 6) When Pr5.20 = 1, setups of positional command filter and damping control have no effect.

Related page P.4-15 (Pr0.14), P.4-58 (Pr5.20)

5) Motor working range setup

During the position control or full-closed control, this function detects the motor position which exceeds the revolutions set to Pr5.14 Allowable motor operating range setting, and issues Err34.0 Motor working range limit protection.

For details, see 6-3 Motor working range setup functions.

Related page P.4-56 (Pr5.14)

6) Hybrid deviation excess error protection setup

At the initial operation with full-closed control, operation failure may occur due to reverse connection of external scale or wrong external scale division ratio.

To indicate this type of defect, Err25.0 "Hybrid deviation excess error protection" is issued when the deviation of motor position (encoder unit) and load position (external scale unit) exceed Pr3.28 "Hybrid deviation excess setting."

For details, see 4-5-3 Setting of hybrid deviation excess.

Related page P.4-37 (Pr3.28)

3. Troubleshooting

Motor Does Not Run

When the motor does not run, refer to P.2-124, "Display of the Factor of No-Motor Running" of Preparation as well.

Classification	Causes		Measures
Parameter	Setup of the control mode is not correct	Check that the present control mode is correct with monitor mode of the front panel.	1) Set up Pr0.01 again. 2) Check that the input to control mode switching (C-MODE) of the Cnnector X4 is correct, when Pr0.01 is set to 3 to 5.
	Selection of torque limit is not correct	Check that the external analog input (N-ATL/ P-ATL) is not used for the torque limit.	1) Set up Pr05.21 to 0 and apply -9 [V] to N-ATL and +9 [V] to P-ATL when you use the external input. 2) Set up Pr05.21 to 1 and set up the max. value to Pr0.13 when you use the parameter value.
	Setup of electronic gear is not correct. (Position/Full-closed)	Check that the motor moves by expected revolution against the command pulses.	1) Check the setups of Pr0.09, Pr0.10 and Pr5.00 to Pr5.02 again. 2) Connect the electronic gear switching input (DIV) of Connector X4 to COM−, or invalidate the division/multiplication switching by setting up the same value to Pr0.09 and Pr5.00.
Wiring	Servo-ON input of Connector X4 (SRV-ON) is open.	In the front panel monitor mode, is the Pin No. corresponding to SRV-ON in “ - ” state?	Check and make a wiring so as to connect the SRV-ON input to COM−.
	Positive/negative direction over-travel inhibit input of Connector X4 (NOT/POT) is open.	In the front panel monitor mode, is the Pin No. corresponding to NOT/POT in “ A ” state?	1) Check and make a wiring so as to connect both NOT/POT inputs to COM−. 2) Set up Pr5.04 to 1 (invalid) and reset the power.
	Command pulse input setup is incorrect. (Position/Full-closed)	Check that the input pulse counts and variation of command pulse sum does not slips, with monitor mode of the front panel.	1) Check that the command pulses are entered correctly to the direction selected with Pr0.05. 2) Check that the command pulses are entered correctly in the format selected with Pr0.07.
	Command pulse input inhibition (INH) of Connector X4 is open. (Position/ Full-closed)	In the front panel monitor mode, is the Pin No. corresponding to INH in “ A ” state?	1) Check and make a wiring so as to connect the INH input to COM−. 2) Set up Pr5.18 to 1 (invalid).
	Counter clear input (CL) of Connector X4 is connected to COM−. (Position/ Full-closed)	In the front panel monitor mode, is the Pin No. corresponding to CL in “ A ” state?	1) Check and make wiring so as to open the CL input 2) Set up Pr5.17 to 0 (invalid).

Related page
- P.2-110 “How to Use the Front Panel”
- P.3-34 “Inputs and outputs on connector X4”
- P.4-7 to P.4-87 “Details of parameter”

When the motor does not run, refer to P.2-124, "Display of the Factor of No-Motor Running" of Preparation as well.

Classification	Causes		Measures
Wiring	Speed command is invalid (Velocity)	Check that the velocity command input method (external analog command/internal velocity command) is correct.	1) Check the setups of Pr3.02 to Pr3.03 again by setting up Pr3.00 to 0, when you use the external analog command. 2) Set up Pr3.04 to Pr3.07 and Pr3.08 to Pr3.11 by setting up Pr3.00 to either one of 1, 2 or 3, when you use the internal speed command.
	Speed zero clamp input (ZEROSPD) of Connecter X4 is open. (Velocity/Torque)	In the front panel monitor mode, is the Pin No. corresponding to ZEROSPD in " A " state?	1) Check and make wiring so as to connect speed zero clamp input to COM−. 2) Set up Pr3.15.
	Torque command is invalid (Torque)	Check that the torque command input method (SPR/TRQR input, P-ATL/ TRQR input) is correct.	1) Check that the input voltage is applied correctly by setting up Pr3.17 to 0, when you use SPR/TRQR input. 2) Check that the input voltage is applied correctly by setting up Pr3.17 to 1, when you use the P-ATL/ TRQR input.
	Velocity control is invalid (Torque)	Check that the velocity limit input method (parameter velocity, SPR/ TRQR/SPL input) is correct.	1) Set up the desired value to Pr3.21 by setting up Pr3.17 to 0, when you use the parameter speed. 2) Check that the input voltage is applied correctly by setting up Pr3.17 to 1, when you use the SPR/ TRQR/SPL input.
Installation	Main power is shut off.	In the front panel monitor mode, is the Pin No. corresponding to S-RDY in " - " state?	Check the wiring/voltage of main power of the driver (L1, L2 and L3).
	The motor shaft drags, the motor does not run.	1) Check that you can turn the motor shaft, after turning off the power and separate it from the machine. 2) Check that you can turn the motor shaft while applying DC24 V to the brake in case of the motor with elec-tromagnetic brake.	If you cannot turn the motor shaft, consult with the dealer for repair.

Related page • P.4-7 to P.4-87 "Details of parameter" • P.3-34 "Inputs and outputs on connector X4"

3. Troubleshooting

Unstable Rotation (Not Smooth), Motor Runs Slowly Even with Speed Zero at Velocity Control Mode

Classification	Causes	Measures
Parameter	Setup of the control mode is not correct.	If you set up Pr0.01 to 1(Velocity control mode) by mistake at position control mode, the motor runs slowly at servo-ON due to speed command offset. Change the setup of Pr0.01 to 0.
Adjustment	Gain adjustment is not proper.	Increase the setup of Pr1.01, 1st velocity loop gain. Enter torque filter of Pr1.04 and increase the setup of Pr1.01 again.
	Velocity and position command are not stable.	Check the motor movement with connector X7 of the front panel or the waveform graphic function of the PANATERM. Review the wiring, connector contact failure and controller.
Wiring	Each input signal of Connector X4 is chattering. 1) Servo-ON signal 2) Positive/Negative direction torque limit input signal 3) Deviation counter input signal 4) Speed zero clamp signal 5) Command pulse inhibition input	1) Check the wiring and connection between Pin29 and 41 of the Connector X4 using the display function of I/O signal status. Correct the wiring and connection so that the Servo-ON signal can be turned on normally. Review the controller. 2) Check the wiring and connection between Pin-18 and 17, 16 and 17 of the Connector X4 using tester or oscilloscope. Correct the wiring and connection so that Positive/Negative direction torque limit input can be entered normally. 3) Check the wiring and connection between Pin-30 and 41 of the Connector X4 using display function of I/O signal status. Correct the wiring and connection so that the deviation counter input can be turned on normally. Review the controller. 4) Check the wiring and connection between Pin-26 and 41of the Connector X4 using Display function of I/O signal status. Correct the wiring and connection so that the speed zero clamp input can be entered normally. Review the controller. 5) Check the wiring and connection between Pin-33 and 41of the Connector X4 using display function of I/O signal status. Correct the wiring and connection so that the command pulse inhibition input can be entered normally. Review the controller.
	Noise is on the velocity command.	Use a shield cable for connecting cable to the Connector X4. Separate the power line and signal line (30 cm or longer) in the separate duct.
	Slip of offset	Check the voltage between Pin-14 and 15 (speed command input) using a tester or an oscilloscope.
	Noise is on the position command.	Use a shield cable for connecting cable to the Connector X4. Separate the power line and signal line (30 cm or longer) in the separate duct.

Related page
• P.4-7 to P.4-87 "Details of parameter" • P.3-34 "Inputs and outputs on connector X4"
• P.7-28 "Outline of Setup support software "PANATERM"

3. Troubleshooting

Positioning Accuracy Is Poor

Classification	Causes	Measures
System	Position command is not correct. (Amount of command pulse)	Count the feedback pulses with a monitor function of the PANATERM or feedback pulse monitor mode of the console while repeating the movement of the same distance. If the value does not return to the same value, review the controller. Make a noise measure to command pulse.
	Captures the positioning complete signal at the edge.	Monitoring with the waveform graphic function of the PANATERM. Make the controller capture the signal not at the edge but with some time allowance.
	Shape or width of the command pulse is not per the specifications.	If the shape of the command pulse is broken or narrowed, review the pulse generating circuit. Make a noise measure.
	Noise is superposed on deviation counter clear input CL (Connector X4, Pin-30).	Make a noise measure to external DC power supply and make no wiring of the unused signal lines.
Adjustment	Position loop gain is small.	Check the position deviation with the monitor function of the PANATERM or at the monitor mode of the console. Increase the setup of Pr1.00 within the range where no oscillation occurs.
Parameter	Setup of the positioning complete range is large.	Lower the setup of Pr4.31 within the range where no chattering of complete signal occurs.
	Command pulse frequency have exceeded 500kpps or 4Mpps.	Lower the command pulse frequency. Change the division/multiplication ratio of 1st and 2nd numerator of command division/multiplication, Pr0.09 and Pr0.10. Use a pulse line interface exclusive to line driver when pulse line interface is used.
	Setup of the division/multiplication is not correct.	Check if the repetition accuracy is same or not. If it does not change, use a larger capacity motor and driver.
	Velocity loop gain is proportion action at motor in stall.	• Set up Pr1.02 and Pr1.07 of time constant of velocity loop integration to 9999 or smaller. • Review the wiring and connection so that the connection between Pin-27 and 41 of the gain switching input connector, Connector X4 becomes off while you set up Pr1.14 of 2nd gain setup, to 1.
Wiring	Each input signal of Connector X4 is chattering. 1) Servo-ON signal 2) Deviation counter clear input signal 3) Positive/Negative direction torque limit input signal 4) Command pulse inhibition input	1) Check the wiring and connection between Pin29 and 41 of the connector, Connector X4 using the display function of I/O signal status. Correct the wiring and connection so that the servo-On signal can be turned on normally. Review the controller. 2) Check the wiring and connection between Pin-30 and 41 of the connector, Connector X4 using display function of I/O signal status. Correct the wiring and connection so that the deviation counter clear input can be turned on normally. Review the controller. 3 Check the wiring and connection between Pin-18 and 17, 16 and 17 of the connector, Connector X4 using tester or oscilloscope. Correct the wiring and connection so that Positive/Negative direction torque limit input can be entered normally. 4) Check the wiring and connection between Pin-33 and 41of the connector, Connector X4 using display function of I/O signal status. Correct the wiring and connection so that the command pulse inhibition input can be entered normally. Review the controller.
Installation	Load inertia is large.	Check the overshoot at stopping with graphic function of the PANATERM. If no improvement is obtained, increase the driver and motor capacity.

Related page
• P.4-7 to P.4-87 "Details of parameter" • P.3-34 "Inputs and outputs on connector X4"
• P.7-28 "Outline of Setup support software "PANATERM"

3. Troubleshooting

Origin Point Slips

Classification	Causes	Measures
System	Z-phase is not detected.	Check that the Z-phase matches to the center of proximity dog. Execute the homing matching to the controller correctly.
	Homing creep speed is fast.	Lower the homing speed at origin proximity. Or widen the origin sensor.
Wiring	Chattering of proximity sensor (proximity dog sensor) output .	Check the dog sensor input signal of the controller with oscilloscope. Review the wiring near to proximity dog and make a noise measure or reduce noise.
	Noise is on the encoder line.	Reduce noise (installation of noise filter or ferrite core), shield treatment of I/F cables, use of a twisted pair or separation of power and signal lines.
	No Z-phase signal output.	Check the Z-phase signal with oscilloscope. Check that the Pin-13 of the connector, connector X4 is connected to the earth of the controller. Connect the earth of the controller because the open collector interface is not insulated. Replace the motor and driver. Request for repair.
	Miswiring of Z-phase output.	Check the wiring to see only one side of the line driver is connected or not. Use a CZ output (open collector if the controller is not differential input.

3. Troubleshooting

Abnormal Motor Noise or Vibration

Classification	Causes	Measures
Wiring	Noise is on the speed command.	Measure the speed command inputs of Pin-14 and 15 of the connector, Connector X4 with an oscilloscope. Reduce noise (installation of noise filter or ferrite core), shield treatment of I/F cables, use of a twisted pair, separation of power and signal lines.
Adjustment	Gain setup is large.	Lower the gain by setting up lower values to Pr1.01 and 1.06, of velocity loop gain and Pr1.00 and Pr1.05 of position loop gain.
Installation	Resonance of the machine and the motor.	Re-adjust Pr1.04 and 1.09. Check if the machine resonance exists or not with frequency characteristics analyzing function of the PANATERM. Set up the notch frequency to Pr2.01, Pr2.04, Pr2.07,Pr2.10 or Pr2.24 if resonance exists.
	Motor bearing	Check the noise and vibration near the bearing of the motor while running the motor with no load. Replace the motor to check. Request for repair.
	Electro-magnetic sound, gear noise, rubbing noise at brake engagement, hub noise or rubbing noise of encoder.	Check the noise of the motor while running the motor with no load. Replace the motor to check. Request for repair.

3. Troubleshooting

Overshoot/Undershoot, Overheating of the Motor (Motor Burn-Out)

Classification	Causes	Measures
Adjustment	Gain adjustment is not proper.	Check with graphic function of PANATERM or monitor (connector X7). Make a correct gain adjustment. Refer to “Adjustment” .
Installation	Load inertia is large.	Check with graphic function of PANATERM or monitor (Connector X7). Make an appropriate adjustment. Increase the motor and driver capacity and lower the inertia ratio. Use a gear reducer.
	Looseness or slip of the machine.	Review the mounting to the machine.
	Ambient temperature, environment.	Lower the temperature with cooling fan if the ambient temperature exceeds the predications.
	Stall of cooling fan, dirt of fan ventilation duct.	Check the cooling fans of the driver and the machine. Replace the driver fan or request for repair. (The upper fan on the H-frame driver stops during servo OFF to save energy. This is normal.)
	Mismatching of the driver and the motor.	Check the name plates of the driver and the motor. Select a correct combination of them referring to the instruction manual or catalogue.
	Failure of motor bearing.	Check that the motor does not generate rumbling noise while turning it by hand after shutting off the power. Replace the motor and request for repair if the noise is heard.
	Electromagnetic brake is kept engaged (left un-released).	Check the voltage at brake terminals. Apply the power (DC24 V) to release the brake.
	Motor failure (oil, water or others)	Avoid the installation place where the motor is subject to high temperature, humidity, oil, dust or iron particles.
	Motor has been turned by external force while dynamic brake has been engaged.	Check the running pattern, working condition and operating status, and inhibit the operation under the condition of the left.

3. Troubleshooting

Motor Speed Does Not Reach to the Setup, Motor Revolutions (Travel) Is Too Large or Small

Classification	Causes	Measures
Parameter	Velocity command input gain is not correct.	Check that the setup of Pr3.02, speed command input gain, is made so as to make the setup of 500 makes 3000 r/min/6 V.
Adjustment	Position loop gain is low.	Set up Pr1.00and Pr1.05, position loop gain to approx. 1000.
	Division/Multiplication is not proper.	Set up correct values to Pr0.09, 1st numerator of electronic gear, Pr0.11, numerator multiplier of electronic gear and Pr0.10, denominator of electronic gear. Refer to parameter setup at each mode.

Related page
- P.4-7 to P.4-87 “Details of parameter”
- P.7-28 “Outline of Setup support software “PANATERM”

3. Troubleshooting

Parameter Returns to Previous Setup

Classification	Causes	Measures
Parameter	No writing to EEPROM has been carried out before turning off the power.	Refer to P.2-132, “EEPROM Writing Mode” of Preparation.

7. Supplement

1.Safety function
Outline 7-3
Input & output signals 7-4
Safety Circuit Block Diagram 7-6
Timing Chart 7-7
Example of connection 7-9

2. Absolute System
Outline 7-12
Configuration 7-13
Battery (for Backup) Installation 7-14
Setup (Initialization) of Absolute Encoder 7-18
Setup (Initialization) of Batteryless absolute Encoder 7-18
Transferring absolute data 7-18
Transferring external scale absolute data 7-23
Display of Battery Alarm 7-27

3. Outline of Setup Support Software, “PANATERM”
Setup on the PC 7-28

4. Communication
Outline 7-29
Specifications 7-30
List of Communication Command 7-41
Details of Communication Command 7-42

5. Block Motion 7-60

6. Motor Characteristics (S-T Characteristics) 7-61

7. Dimensions

Driver A-frame 7-93
B-frame 7-94
C-frame 7-95
D-frame 7-96
E-frame 7-97
F-frame 7-98
G-frame 7-99
H-frame 7-100
Motor (Absolute encoder type) 7-101
Motor (Batteryless absolute encoder type) 7-139

8. Options

Noise Filter 7-156
Surge Absorber 7-159
Ferrite core 7-160
Junction Cable for Encoder 7-161
Junction Cable for Motor (Without brake) 7-166
Junction Cable for Motor (With brake) 7-171
Junction Cable for Brake 7-175
Connector Kit 7-176
Battery For Absolute Encoder 7-194
Mounting Bracket 7-195
Reactor 7-196
External Regenerative Resistor 7-198
Recommended components 7-200
List of Peripheral Equipments 7-201

9. License Terms for Open Source Software (OSS) 7-203

1. Safety function

Outline

SE	SG	SF
		○

Outline description of safe torque off (STO)

The safe torque off (STO) function is a safety function that shuts the motor current and turns off motor output torque by turning off the driving signal of the servo driver' s internal power transistor,when safety input signal is detected.
When STO function operates, the servo driver turns off the servo ready output signal (S-RDY) and enters safety state,"St" is displayed on the front panel.Also when STO input is off and servo on input is off, it enters servo ready status automatically.
In the STO state, the position deviation is zero clear.

Caution
- The servo driver has built-in safety function. [A6SE][A6SG]: Cannot use this function. 《Change point compared to A5 seriess》

	MINAS-A5	MINAS-A6 ([A6SF])	
STO function is on	Alarm triggered (Err30.0)	No alarm triggered ("St" is displayed on LED of 7-phase)	
STO function is off	STO reason released and alarm cleared	No alarm occurs after STO state transition	An alarm occurs after STO state transition
		STO reason released and servo turn off command	STO reason/alarming reason released and alarm cleared

Safety precautions

- When using the STO function, be sure to perform equipment risk assessment to ensure that the system conforms to the safety requirements.
- Even while the STO function is working, the following potential safety hazards exist. Check safety in risk assessment.
  - The motor may move when external force (e.g. gravity force on vertical axis) is exerted on it. Provide an external brake, etc., as necessary to secure the motor. Note that the purpose of motor with brake is holding and it cannot be used for braking application.
  - When parameter Pr5.10 Sequence at alarm is set to free run (disable dynamic brake), the motor is free run state and requires longer stop distance even if no external force is applied. Make sure that this does not cause any problem.
  - When power transistor, etc., becomes defective, the motor will move to the extent equivalent of 180 electrical angle (max.). Make sure that this does not cause any problem.
  - The STO turns off the current to the motor but does not turn off power to the servo driver and does not isolate it. When starting maintenance service on the servo driver, turn off the driver by using a different disconnecting device.
- External device monitor (hereafter EDM) output signal is not a safety signal. Do not use it for an application other than failure monitoring.
- Dynamic brake and external brake release signal output are not related to safety function. When designing the system, make sure that the failure of external brake release during STO condition does not result in danger condition.
- When using STO function, connect equipment conforming to the safety standards.

Related page
- P.2-4 "Conformance to international standards"
- P.2-110 "How to Use the Front Panel"
- P.3-34 "Inputs and outputs on connector X4"

Safety input signal

For list of connector pin numbers, refer to P.2-56.

Signal	Symbol	Pin No.	Contents	Control mode
Safety input 1	SF1+	4	• Input 1 that triggers STO function. This input turns off the upper arm drive signal of power transistor. • When using the function, connect this pin in a way so that the photocoupler of this input circuit turns off to activate STO function.	Compatible all control mode
	SF1−	3		
Safety input 2	SF2+	6	• Input 2 that triggers STO function. This input turns off the lower arm drive signal of power transistor. • When using the function, connect this pin in a way so that the photocoupler of this input circuit turns off to activate STO function.	
	SF2−	5		

<Response time>

- Safety input 1 or 2 enables STO to operate until motor output torque be turned off, the response time is within 5ms.
- Please input the same signal to safety input 1 and 2.

Caution

- Safety equipment self-diagnosis L pulse
  Safety output signal from the safety controller and safety sensor may include L pulse for self-diagnosis.
  To prevent the L pulse from mis-triggering STO function, the safety input circuit has built-in filter that removes the self-diagnosis L pulse.
  Therefore, if the off period of safety input signal less than 1 ms, the safety input circuit does not detect this “off” event.
  To validate this “off” period, turn off the input signal for more than 5 ms.

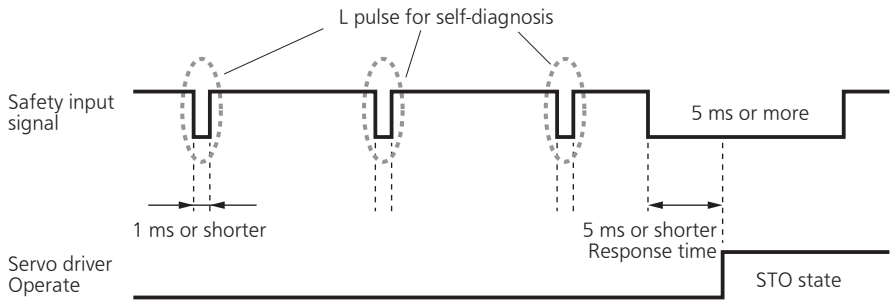

Related page
- P.2-4 “Conformance to international standards”
- P.3-34 “Inputs and outputs on connector X4”
- P.2-110 “How to Use the Front Panel”

External device monitor (EDM) output signal

The monitor output signal is used by the external device to monitor the state of the safety input signal. Connect the monitor output to the external device monitor terminal of the safety devices such as safety controller and safety sensor.

Signal	Symbol	Pin No.	Contents	Control mode
EDM output	EDM+	8	Outputs monitor signal that is used to check the safety function. Caution This output signal is not a safety output.	Compatible all control mode
	EDM−	7		

Logical relationship between safety input signal and EDM output signal

When both safety input 1 and 2 are off, i.e. when STO function of 2 safety input channels are active, the photocoupler in EDM output circuit turns on.

Signal	Symbol	photocoupler logic			
Safety input	SF1	ON	ON	OFF	OFF
	SF2	ON	OFF	ON	OFF
EDM output	EDM	OFF	OFF	OFF	ON

By monitoring the logics (all 4 states) of photocoupler shown in the table above, the external device can determine the status (normal or abnormal) of safety input circuit and EDM output circuit. That is to say, in the case of an anomaly, although both safety input 1 and 2 are off, the photocoupler in EDM output circuit does not turn on. Or, although either safety input 1 or 2 or both safety input 1 and 2 turned on, the state in which the photocoupler in EDM output circuit turned on has been detected.

Note

Maximum delay time from input of safety 1 and 2 signals to output of EDM signal is 6 ms.

In order to satisfy safety specifications, EDM signals need to be monitored by host.

- EDM signal monitoring must be implemented every three months when the driver is started or when safety input is made.

Related page
- P.2-4 “Conformance to international standards”
- P.2-110 “How to Use the Front Panel”
- P.3-34 “Inputs and outputs on connector X4”

1. Safety function

Safety Circuit Block Diagram

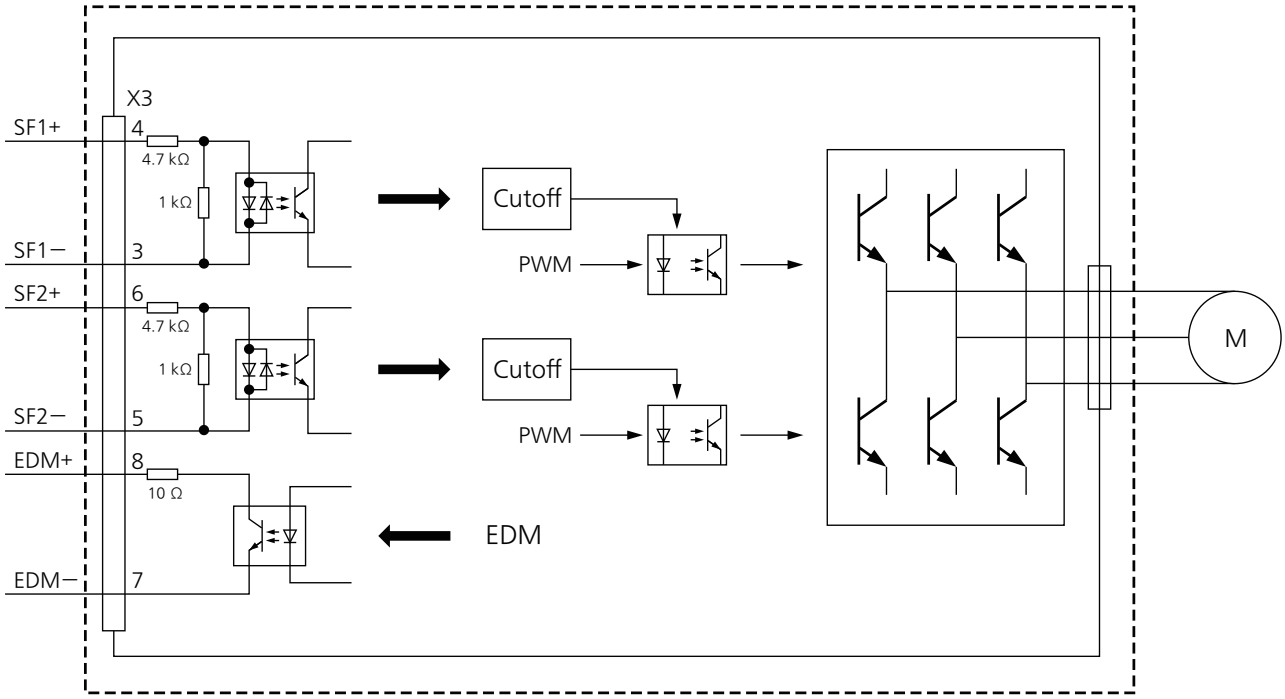

Related page
• P.2-4 “Conformance to international standards”
• P.2-110 “How to Use the Front Panel”
• P.3-34 “Inputs and outputs on connector X4”

Operating timing for safety status

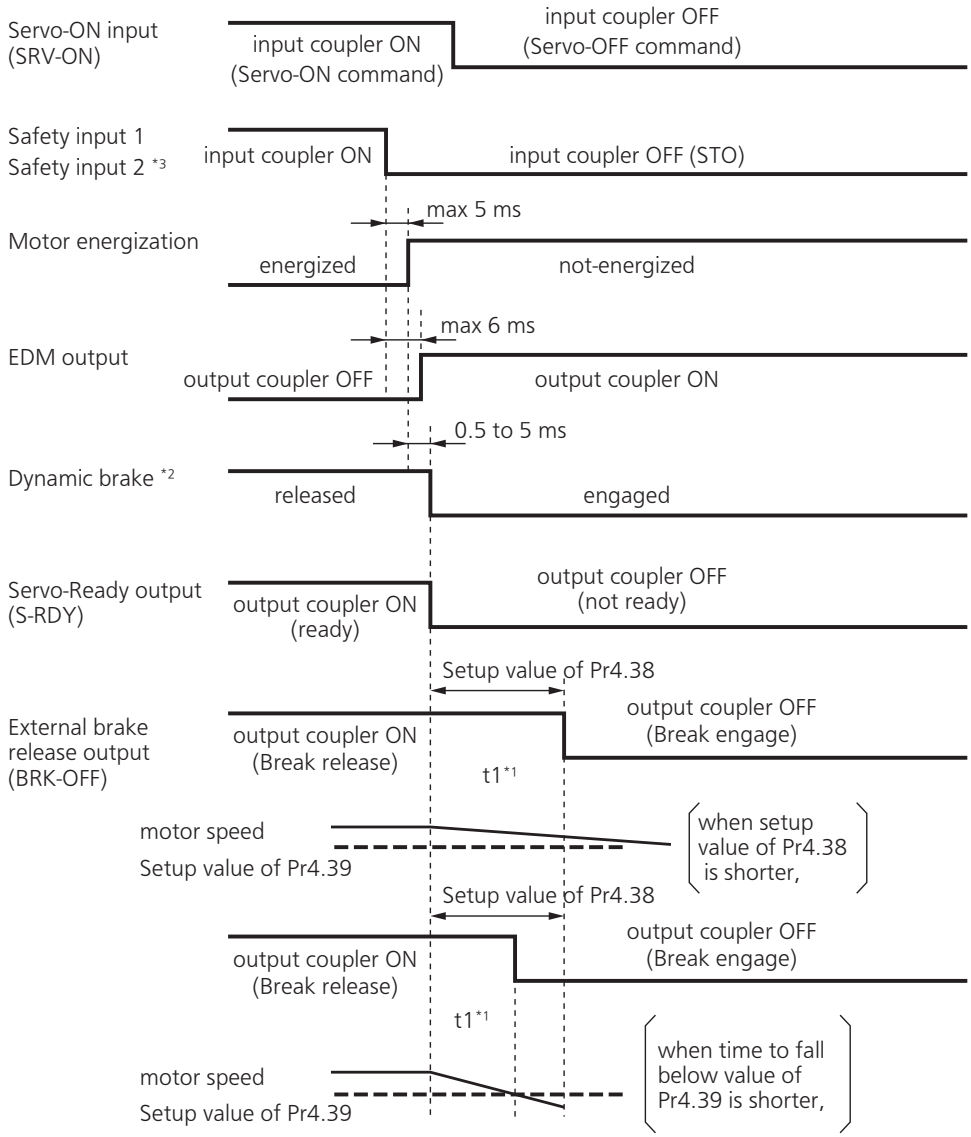

*1 t1 is the value set to Pr4.38 Setup of mechanical brake action at running or the time at which the motor revolution speed drops below the time set to Pr4.39 Brake release speed setup, whichever comes first.

*2 Dynamic brake operates to the setting of Pr5.10(Sequence at alarm). (The [Sequence at alarm] is also applicable even if there is no alarm in STO condition).

*3 Please turn off safety input 1 and 2 when STO function is turned on.

*4 When the motor is disconnected from the power supply until the external brake operates, it will drop because the vertical axis is not servo-locked. Please be careful for this kind of problem when the external brake is operated.

Related page
- P.2-4 “Conformance to international standards”
- P.2-110 “How to Use the Front Panel”
- P.3-34 “Inputs and outputs on connector X4”

Return timing from safety state

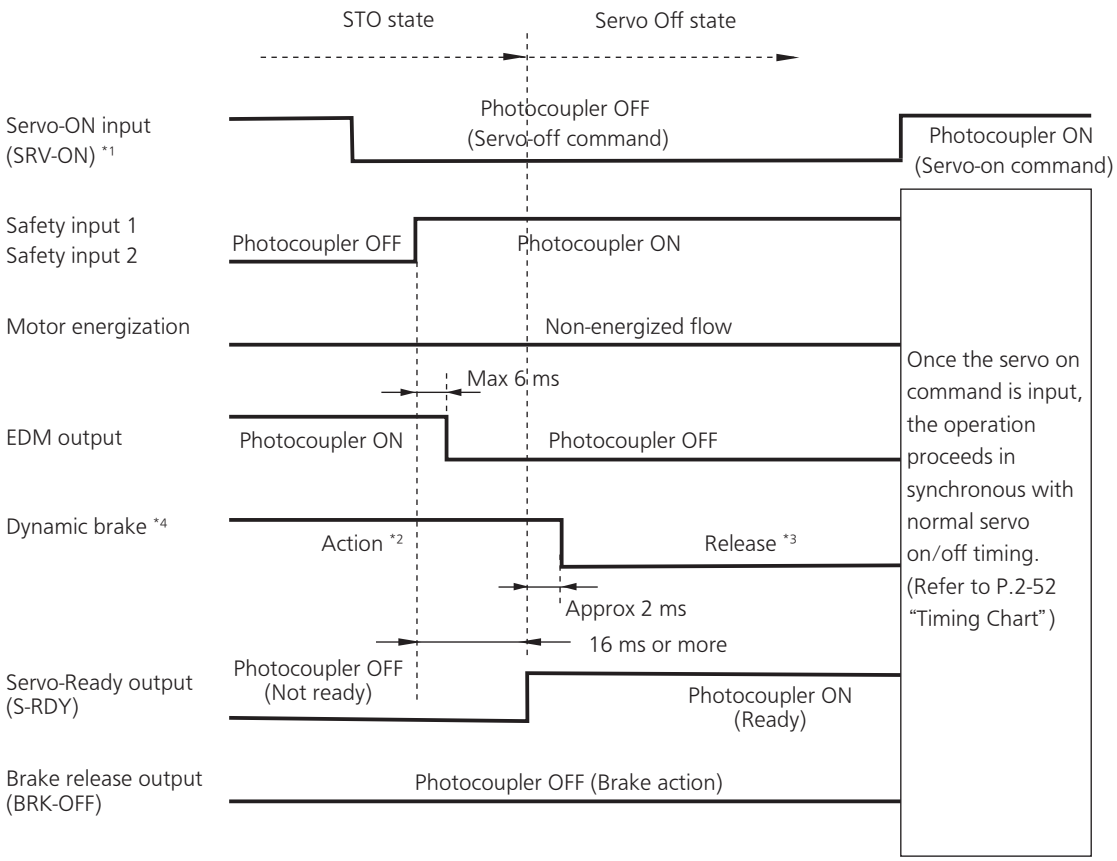

*1.Photocouplers for safety input 1 and 2 should be turned on again with servo-on input turned off. Returning photocouplers for safety input 1 and 2 to ON will automatically reset it to Server Off mode. (There is no need to conduct alarm-clear.)

*2.This is alarm generating condition and the dynamic brake operates according to the setting of Pr5.10 (Sequence at alarm).(The [Sequence at alarm] is also applicable even if there is no alarm in STO condition).

*3.This is normal servo-off condition and the dynamic brake operates to the setting of Pr5.06(Sequence at servo-off).

Related page
- P.2-4 "Conformance to international standards"
- P.2-110 "How to Use the Front Panel"
- P.3-34 "Inputs and outputs on connector X4"

1. Safety function

Example of connection

Attention points of connection

According to the different safety drivers connected, the driver power needs to be turned on first.
At this time, the driver is in the alarm condition in the A5 series and STO condition in the A6 series. The reset method from alarm condition or STO condition is as following.

《A5 series》
*Turn off servo-on input.
*Return photocouplers for safety input 1 and 2 to ON.
*Remove the alarm

《A6 series》
*Turn off servo-on input.
*Return photocouplers for safety input 1 and 2 to ON.
*Automatically reset to servo ready condition.

Example of connection to safety switch

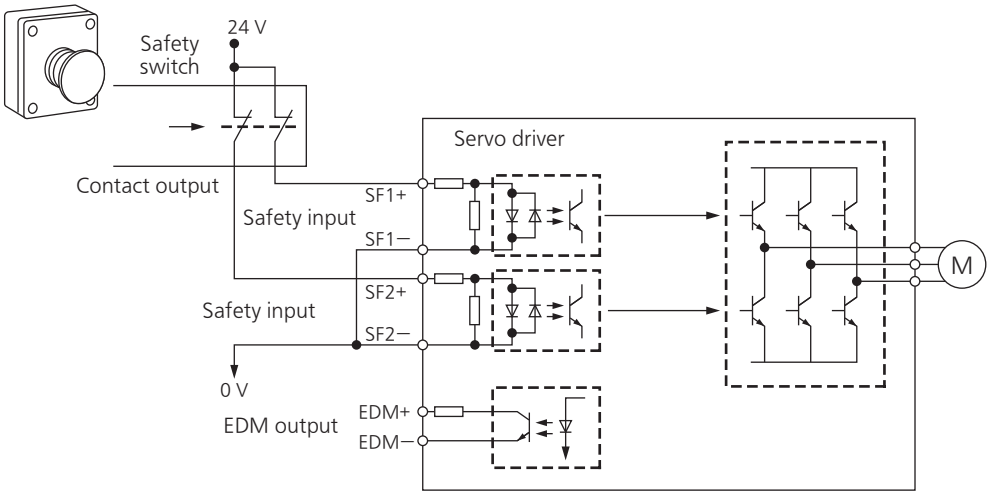

Example of connection to safety sensor

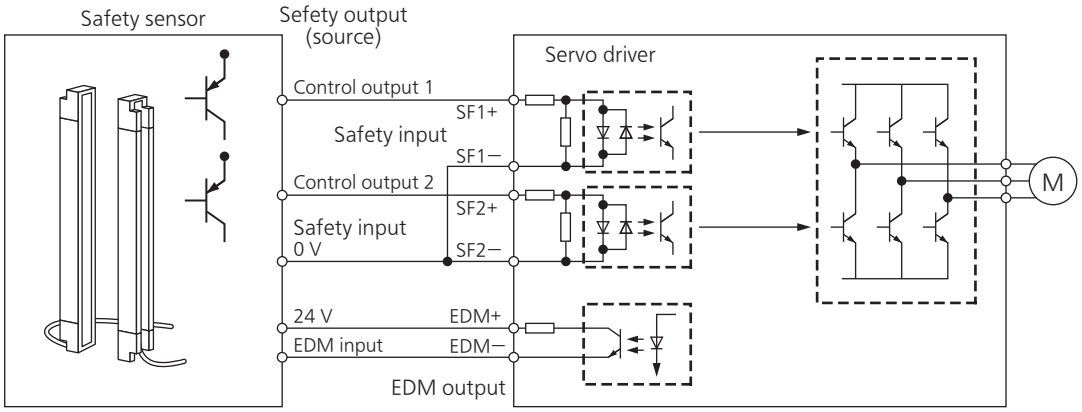

Example of connection to safety controller

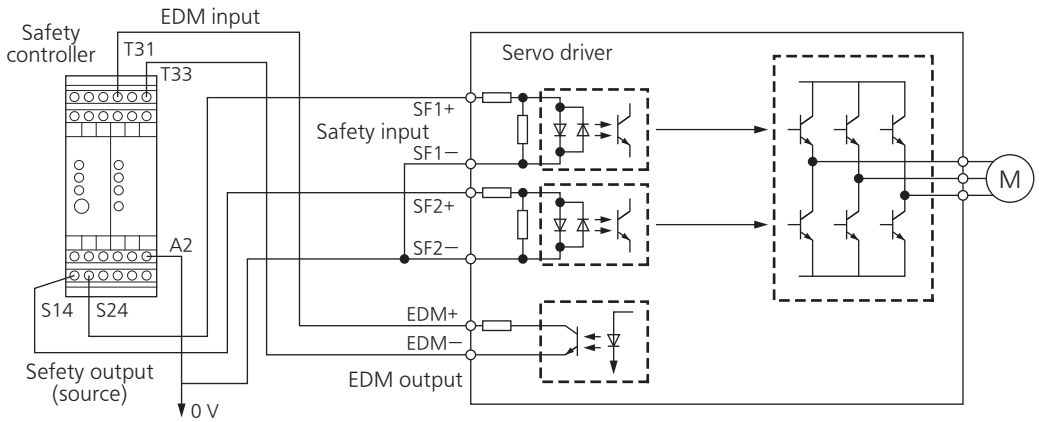

Related page
• P.2-4 “Conformance to international standards”
• P.2-110 “How to Use the Front Panel”
• P.3-34 “Inputs and outputs on connector X4”

Example of connection when using multiple axes

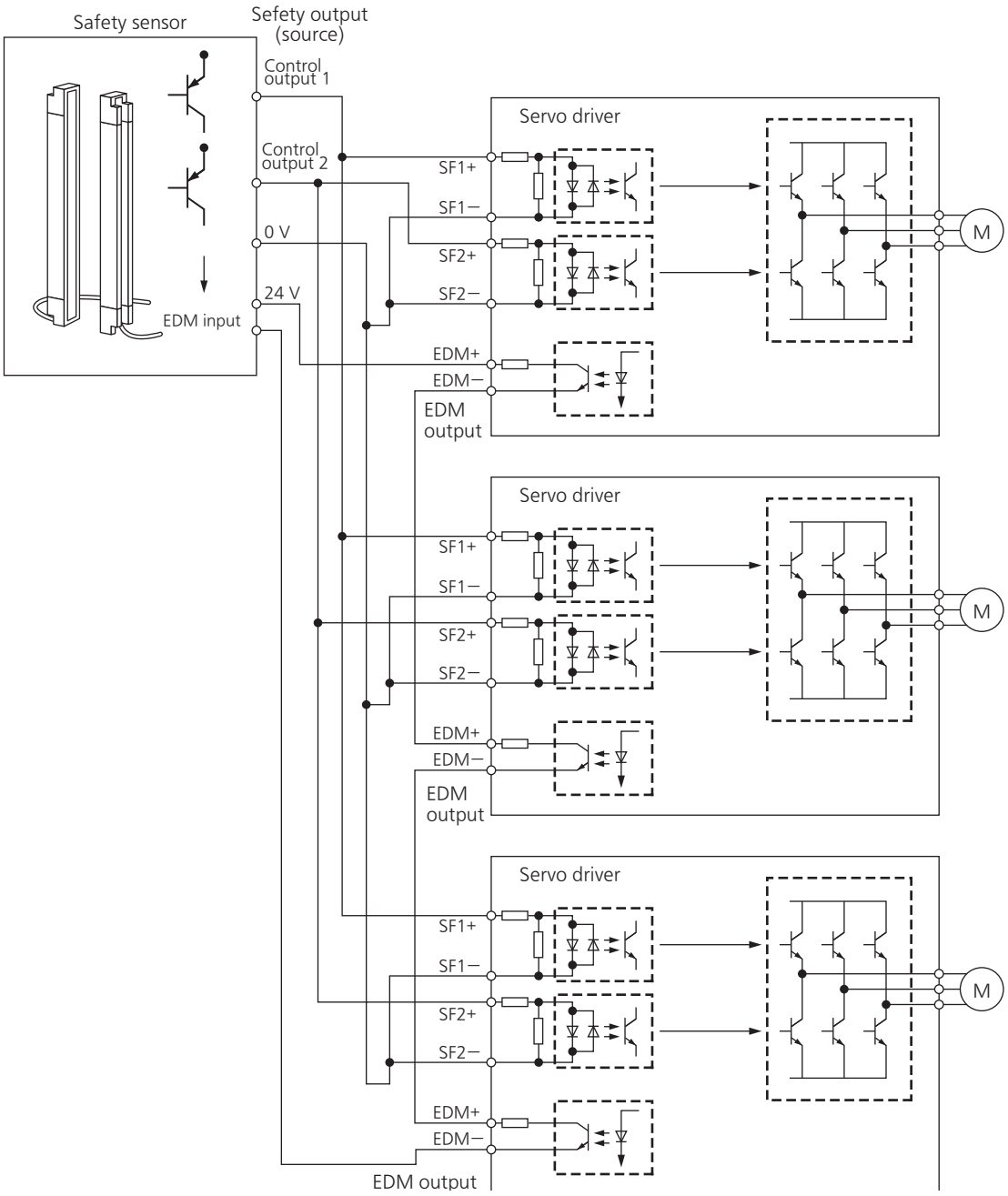

- Capacity requirement per safety output (source) channel: 5 × No. of connected axes (mA)
- 24 VDC supply allowable voltage: 24 V ± 15 %
- Maximum No. of connectable axes: 8

* The number of connectable axes shown in the figure is for reference only.
EDM output depends on external circuit because saturated voltage Vce (sat) of approx. 1.0 V in the built-in photocoupler varies with collector current.
Amount of current flowing to SF input is 5 mA per circuit.
When increasing the number of axes to be connected, make sure that required amount of current does not exceed the maximum output current of the safety controller.

Related page
- P.2-4 "Conformance to international standards"
- P.2-110 "How to Use the Front Panel"
- P.3-34 "Inputs and outputs on connector X4"

2. Absolute system

Outline

SE	SG	SF
	○	○

Outline of Absolute System

When you compose an absolute system using an absolute encoderor battery-less absolute encoder, you are not required to carry out homing operation at the power-on, and this function suits very well to such an application as a robot.

The host controller with motors of absolute encoder specification, by connecting an absolute encoder battery, and by setting Pr0.15 “Absolute encoder setting” to value other than “1” (factory setting), can be setup that will not require an absolute system where return to origin is not required after reclosing of power supply. A motor with a built-in batteryless absolute encoder does not require the connection of a battery for multi-rotation data backup.

Shift the system to origin once after installing the battery and clear the multi-turn data by clearing the absolute encoder, then you can detect the absolute position without carrying out homing operation.

Via RS232 or RS485 communication, the host controller can connect up to 32 MINAS-A6 and capture the present position information as serial data to obtain the absolute position of each axis by processing. each data.

Absolute Specifications

There are 2 connecting methods of the host controller and MINAS-A6 driver as described below, and select a method depending on the interface of the host controller specs or number of axis to be connected. Designate a module ID to Pr5.31 of each MINAS-A6 driver when you connect multiple MINAS-A6 in communication to one host controller as shown below.

[Parameter Pr5.31]

- When you connect each MINAS-A6 to the host separately with RS232 and switch the communication individually, designate 0 to 31 to each MINAS-A6.
- When you connect one MINAS-A6 to the host with RS232 and connect each MINAS-A6 with RS485, designate 0 to the MINAS-A6 connected with the host, and designate 1 to 31 to other MINAS-A6. (Max 32 axis are connectable.)
- When you connect MINAS-A6 to the host with RS485, the host is given module ID of 0, and designate 1 to 31 to MINAS-A6. (Max 31 axis are connectable.)

Configuration of absolute system of scale using RS232 interface

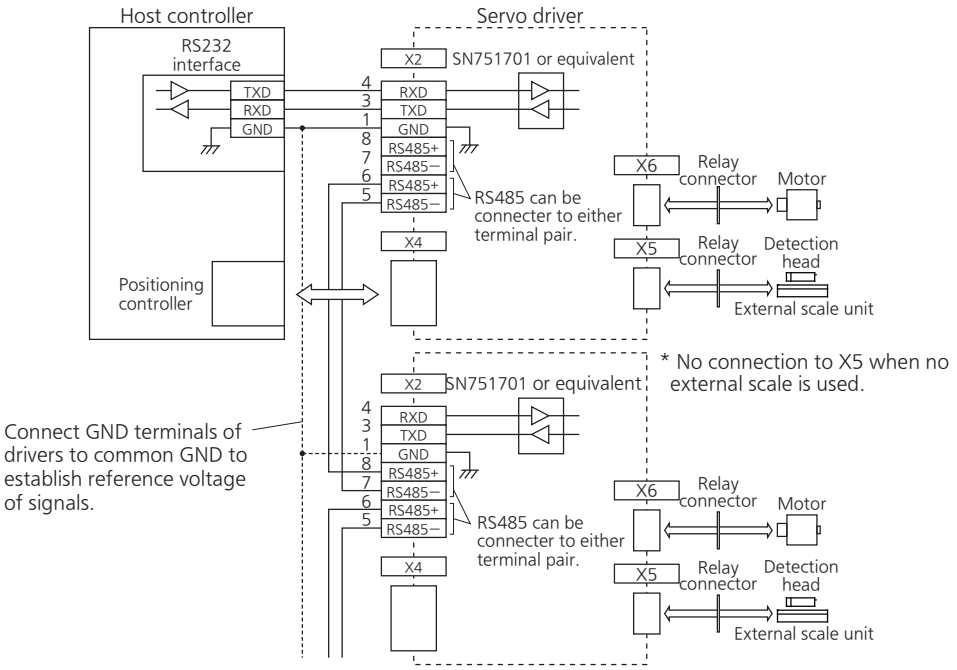

Related page P.7-30 "Connection of Communication Line"

Configuration of absolute system of scale using RS485 interface

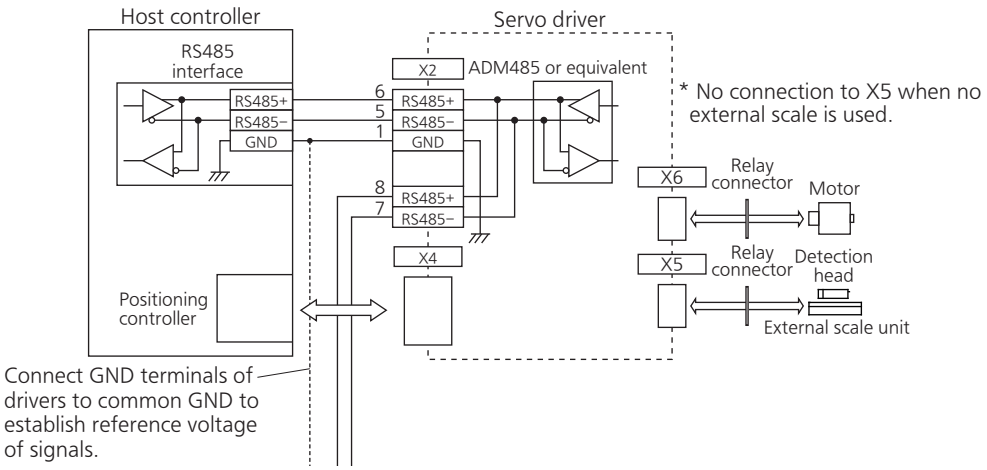

Related page P.7-30 "Connection of Communication Line"

Note * Battery for absolute encoder is required to store the multi-turn data into the encoder. Connect the battery between BAT+ and BAT− of the motor.

First Installation of the Battery

After installing and connecting the back-up battery to the motor, execute an absolute encoder setup. Refer to P.7-18, "Setup (initialization) of Absolute Encoder ".
It is recommended to perform ON/OFF action once a day after installing the battery for refreshing the battery.
After installing the absolute encoder battery, it is recommended to turn on / off the control power supply once a day to refresh the battery.
A battery error might occur due to voltage delay of the battery if you fail to carry out the battery refreshment.

Caution Use the following battery for absolute encoder.
Battery ..... Part No. : DV0P2990 (3.6 V 2000 mAh)
Battery box.... Part No. : DV0P4430

Replacement of the Battery

It is necessary to replace the battery for absolute encoder when battery alarm occurs.
Replace while turning on the control power. Data stored in the encoder might be lost when you replace the battery while the control power of the driver is off.
After replacing the battery, clear the battery alarm. Refer to P.7-27, "How to Clear the Battery Alarm".

Caution When you execute the absolute encoder with the front panel (refer to P.2-138 of Preparation), or via communication (refer to P.7-59), all of error and multi-turn data will be cleared together with alarm, and you are required to execute “Setup (Initialization) of absolute encoder” (refer to P.7-18).

How to Replace the Battery

1) Refresh the new battery.
Connector with lead wire of the battery to CN601 and leave of 5 min. Pull out the connector from CN601 5 min after.

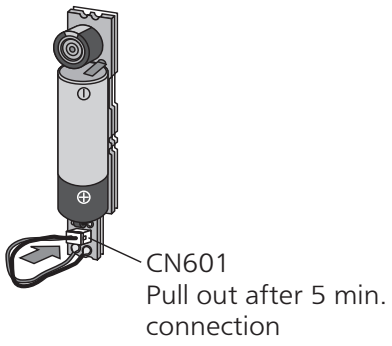

2) Take off the cover of the battery box.

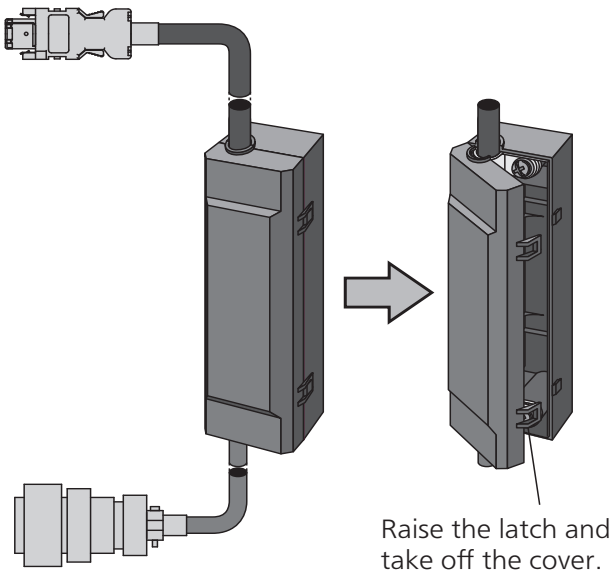

Related page • P.7-194 “Battery For Absolute Encoder”

3) Install the battery to the battery box.

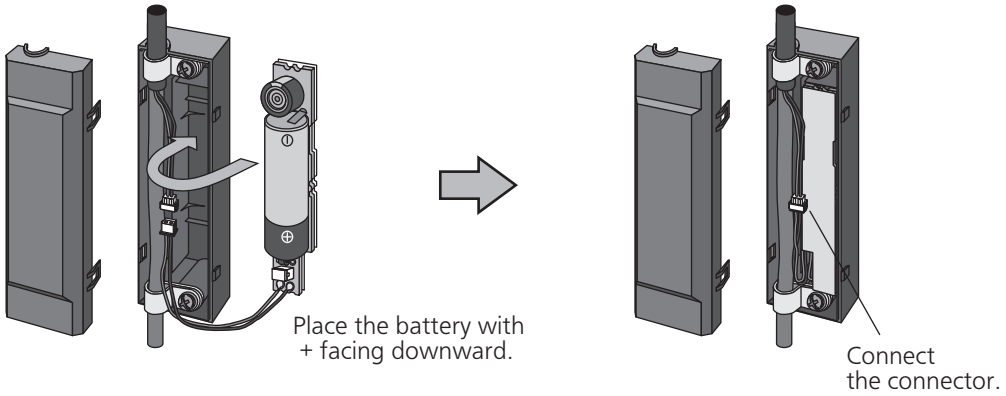

4) Close the cover of the battery box.

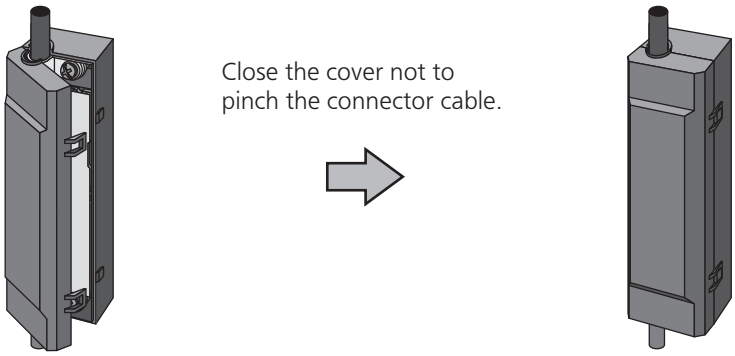

Caution

- Be absolutely sure to follow the precautions below since improper use of the battery can cause electrolyte to leak from the battery, giving rise to trouble where the product may become corroded, and/or the battery itself may rupture.
  1) Insert the battery with its "+" and "−" electrodes oriented correctly.
  2) Leaving a battery which has been used for a long period of time or a battery which is no longer usable sitting inside the product can cause electrolyte leakage and other trouble. For this reason, ensure that such a battery is replaced at an early date. (As a general guideline, it is recommended that the battery be replaced every two years.)
     - The electrolyte inside the battery is highly corrosive, and if it should leak out, it wil l not only corrode the surrounding parts but also give rise to the danger of short-circuiting since it is electrically conductive. For this reason, ensure that the battery is replaced periodically.
  3) Do not disassemble the battery or throw it into a fire.
     - Do not disassemble the battery since fragments of the interior parts may fly into your eyes, which is extremely dangerous. It is also dangerous to throw a battery into a fire or apply heat to it as doing to may cause it to rupture.
  4) Do not cause the battery to be short-circuited. Under no circumstances must the battery tube be peeled off.
     - It is dangerous for metal items to make contact with the "+" and "−" electrodes of the battery since such objects may cause a high current to flow all at once, which will not only reduce the battery performance but also generate considerable heat, possibly leading to the rupture of the battery.
  5) This battery is not rechargeable. Under no circumstances must any attempt be made to recharge it.

Caution

The disposal of used batteries after they have been replaced may be subject to restrictions imposed by local governing authorities. In such cases, ensure that their disposal is in accordance with these restrictions.

Life of the battery

Following example shows the life calculation of the back-up battery used in assumed robot operation.
2000[mAh] of battery capacity is used for calculation.

Note that the following value is not a guaranteed value, but only represents a calculated value.

Caution The values below were calculated with only the current consumption factored in. The calculations do not factor in electrolyte leakage and other forms of battery deterioration.
Life time may be shortened depending on ambient condition.

1) 2 cycles/day

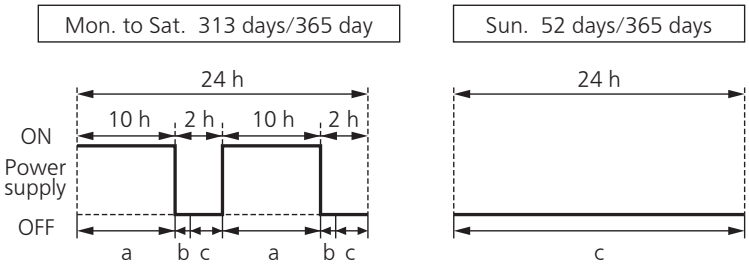

a : Current consumption in normal mode 0 [μA]
b : Current consumption at power failure timer mode 90 [μA]
c : Current consumption at power failure mode 30 [μA]

Annual consumption capacity =
(10 h × a + 0.0014 h × b + 2 h × c) × 2 × 313 days + 24 h × c × 52 days = 75.1 [mAh])
Battery life = 2000 [mAh]/75.1 [mAh/year] = 26.6 [year]

2) 1 cycle/day
(2nd cycle of the above 1) is for rest.

Annual consumption capacity =
(10 h × a + 0.0014 h × b + 14 h × c) × 313 days + 24 h × c × 52 days = 168.9 [mAh])
Battery life = 2000 [mAh]/168.9 [mAh/year] = 11.8 (11.841) [year]

When you make your own cable for absolute encoder

When you make your own cable for absolute encoder, connect the optional battery for absolute encoder, DV0P2990 as per the wiring diagram below. Connector of the battery for absolute encoder shall be provided by customer as well.

Caution Install and fix the battery securely. If the installation and fixing of the battery is not appropriate, it may cause the wire breakdown or damage of the battery.
Refer to the instruction manual of the battery for handling the battery.

- Installation Place
  1) Indoors, where the products are not subjected to rain or direct sun beam.
  2) Where the products are not subjected to corrosive atmospheres such as hydrogen sulfide, sulfurous acid, chlorine, ammonia, chloric gas, sulfuric gas, acid, alkaline and salt and so on, and are free from splash of inflammable gas, grinding oil, oil mist, iron powder or chips and etc.
  3) Well-ventilated and humid and dust-free place.
  4) Vibration-free place

- Wiring Diagram

- Pin number of optional connector kit

		E5V	E0V	BAT+	BAT−	PS	$\overline{PS}$	FG
Small motor	lead cable type	7	8	1	2	4	5	3
	connect type	6	3	5	2	7	4	1
Large motor	connect type(JN2)	6	1	6	5	3	7	9
	connect type(JL10)	H	G	T	S	K	L	J

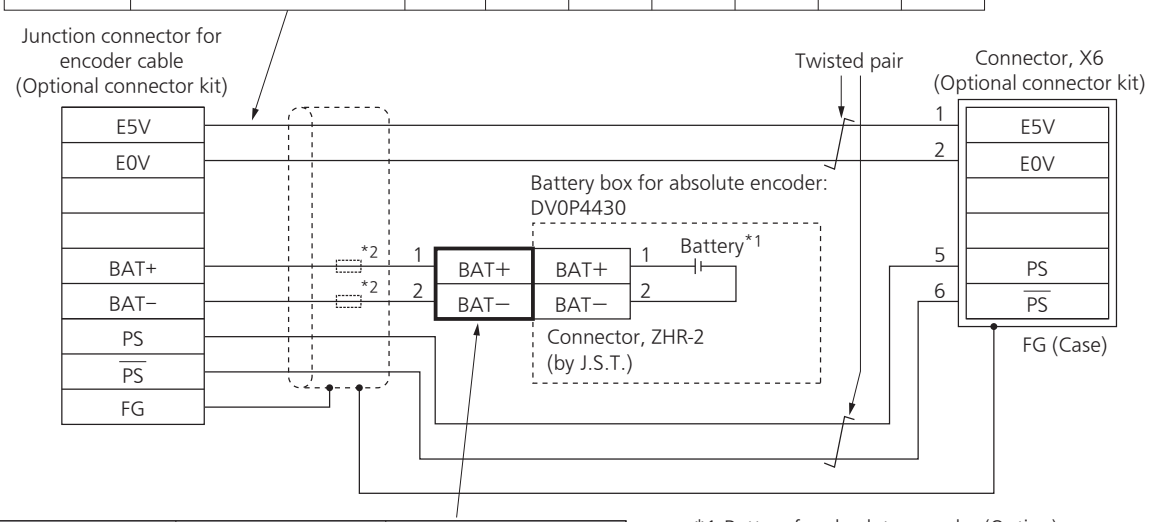

Title	Part No.	Manufacturer
Connector	ZMR-2	J.S.T.
Connector pin	SMM-003T-P0.5	J.S.T.
Clamping Jig	YRS-800	J.S.T.

Connector for absolute encoder connection (To be provided by customer)

*1 Battery for absolute encoder (Option): DV0P2990

*2 Since applicable wire diameters of the battery connector and connector at encoder side are different, please connect wires by soldering.

Related page • P.7-194 "Battery For Absolute Encoder"

2. Absolute system

Setup (Initialization) of Absolute Encoder

Absolute multi-turn data will be maintained by the absolute encoder battery.
When operating the machine for the first time after installing the battery to the absolute encoder, clear the encoder data (multi-turn data) to 0 at the origin by following the procedure described below.
Clear the absolute encoder from the front panel (see P.2-138) or PANATERM. Turn off power and then on again.

2. Absolute system

Setup (Initialization) of Batteryless Absolute Encoder

For motors equipped with a batteryless absolute encoder, it is necessary to clear the encoder at the origin position and set the value of the multi-rotation data to 0 when the machine is started for the first time.
Use PANATERM to clear the Terires Absolute Encoder. After clearing, turn off the control power and then turn it on again.

2. Absolute system

Transferring absolute data

Transfer the absolute data (absolute data of external scale) from the servo driver to the host controller: turn on power and wait until the servo ready output (S-RDY) is turned on, and then start transfer.

Setup of serial communication interface on host controller

- RS232

Baud rate	2400, 4800, 9600, 19200, 38400, 57600, 115200 bps
Data	8 bit
Parity	none
Start bit	1 bit
Stop bit	1 bit

The baud rate is set according to Pr5.29 Baud rate setup of RS232 communication.

- RS485

Baud rate	2400, 4800, 9600, 19200, 38400, 57600, 115200 bps
Data	8 bit
Parity	none
Start bit	1 bit
Stop bit	1 bit

The baud rate is set according to Pr5.30 Baud rate setup of RS485 communication.

Related page
- P.3-34 “Inputs and outputs on connector X4”
- P.4-60 ,P.4-61 “Details of parameter”

RS232 Communication Protocol

Refer to the instruction manual of the host for the transmission/reception method of command.

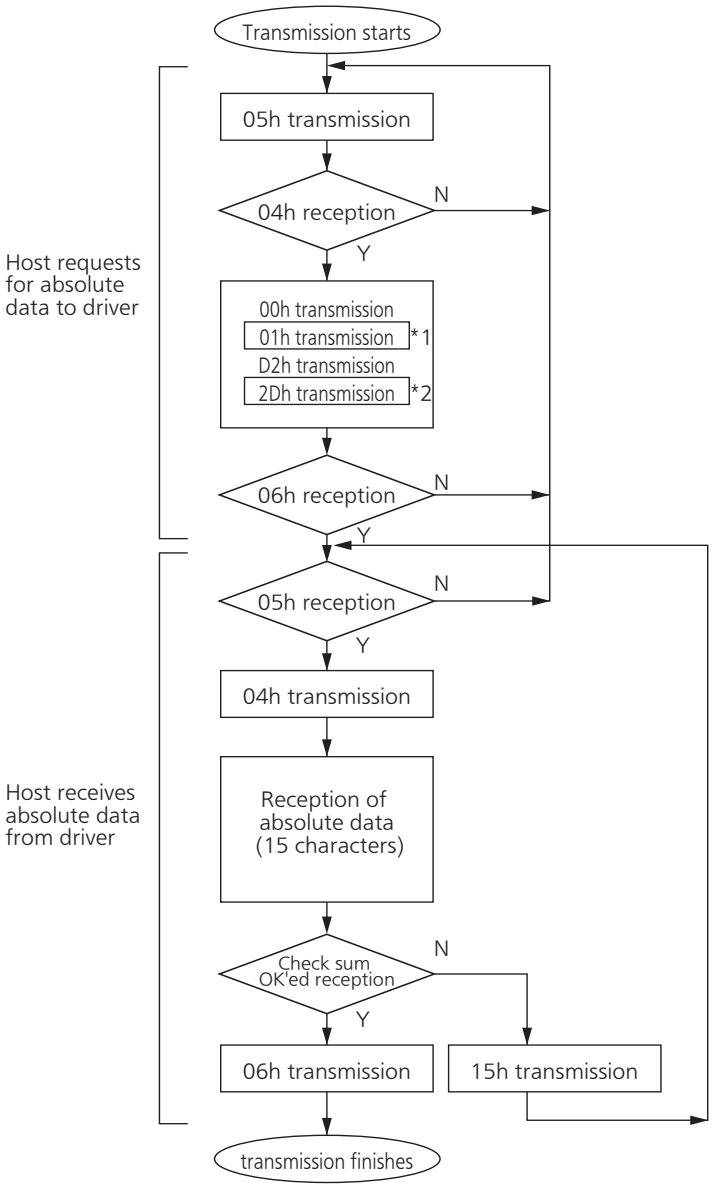

Data of *1 and *2 are determined by the setup of Pr5.31 "Axis address".

Axis address (example)	Data of *1	Data of *2
0	00h	2Eh
1	01h	2Dh
2	02h	2Ch
3	03h	2Bh
4	04h	2Ah
5	05h	29h
6	06h	28h
7	07h	27h
8	08h	26h
9	09h	25h
10	0Ah	24h
11	0Bh	23h
12	0Ch	22h
13	0Dh	21h
14	0Eh	20h
15	0Fh	1Fh
16	10h	1Eh
17	11h	1Dh
18	12h	1Ch
19	13h	1Bh
20	14h	1Ah
21	15h	19h
22	16h	18h
23	17h	17h
24	18h	16h
25	19h	15h
26	1Ah	14h
27	1Bh	13h
28	1Ch	12h
29	1Dh	11h
30	1Eh	10h
31	1Fh	0Fh

Check sum becomes OK'ed when the lower 8-bit of the sum of the received absolute data (15 characters) is 0.

Enter the Pr5.31 value of the driver to which you want to communicate from the host to axis (*1 data) of the command block, and transmit the command according to the RS232 communication protocol. For details of communication, refer to P.7-29, "Communication".

Caution

- Allow 50 ms or longer interval for axis switching when you want to capture multiple axes data.
- It is recommended for you to repeat the above communication more than 2 times to confirm the absolute data coincide, in order to avoid misoperation due to unexpected noise.

RS485 Communication Protocol

Refer to the instruction manual of the host for the transmission/reception method of command. Following shows the communication example of the driver to Pr5.31 “Axis address = 1” .

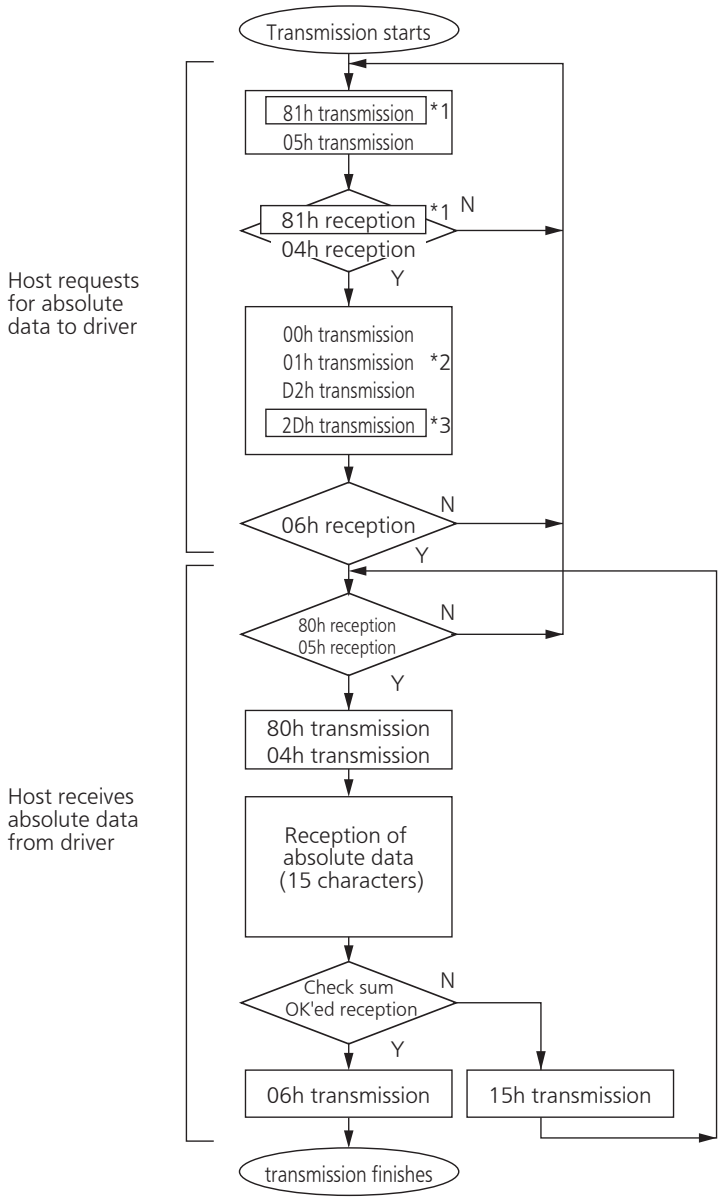

Data of *1, *2 and *3 are determined by the setup of Pr5.31 “Axis address”.

Axis address (example)	Data of *1	Data of *2	Data of *3
0	not usable with RS485 communication		
1	81h	01h	2Dh
2	82h	02h	2Ch
3	83h	03h	2Bh
4	84h	04h	2Ah
5	85h	05h	29h
6	86h	06h	28h
7	87h	07h	27h
8	88h	08h	26h
9	89h	09h	25h
10	8Ah	0Ah	24h
11	8Bh	0Bh	23h
12	8Ch	0Ch	22h
13	8Dh	0Dh	21h
14	8Eh	0Eh	20h
15	8Fh	0Fh	1Fh
16	90h	10h	1Eh
17	91h	11h	1Dh
18	92h	12h	1Ch
19	93h	13h	1Bh
20	94h	14h	1Ah
21	95h	15h	19h
22	96h	16h	18h
23	97h	17h	17h
24	98h	18h	16h
25	99h	19h	15h
26	9Ah	1Ah	14h
27	9Bh	1Bh	13h
28	9Ch	1Ch	12h
29	9Dh	1Dh	11h
30	9Eh	1Eh	10h
31	9Fh	1Fh	0Fh

Check sum becomes OK'ed when the lower 8-bit of the sum of the received absolute data (15 characters) is 0.

Command from the host will be transmitted to the desired driver based on RS485 transmission protocol. For details of communication, refer to P.7-29, "Communication".

Caution

- Allow 50 ms or longer interval for axis switching when you want to capture multiple axes data.
- It is recommended for you to repeat the above communication more than 2 times to confirm the absolute data coincide, in order to avoid misoperation due to unexpected noise.

Composition of Absolute Data

Absolute data consists of singe-turn data which shows the absolute position per one revolution and multi-turn data which counts the number of revolution of the motor after clearing the encoder.

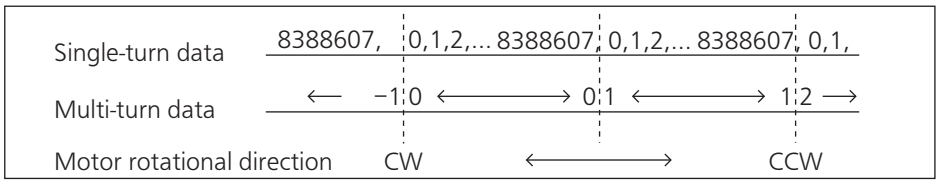

Single-turn data and multi-turn data are composed by using 15-character data (hexadecimal binary code) which are received via RS232 or RS485.

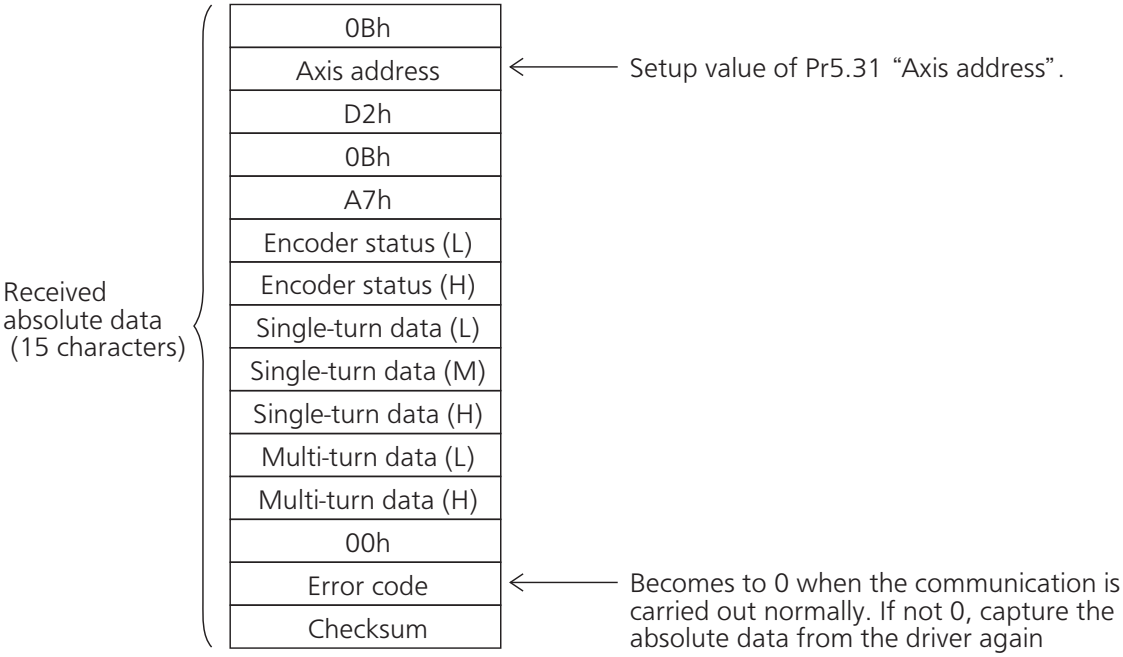

- Details of multi-turn data

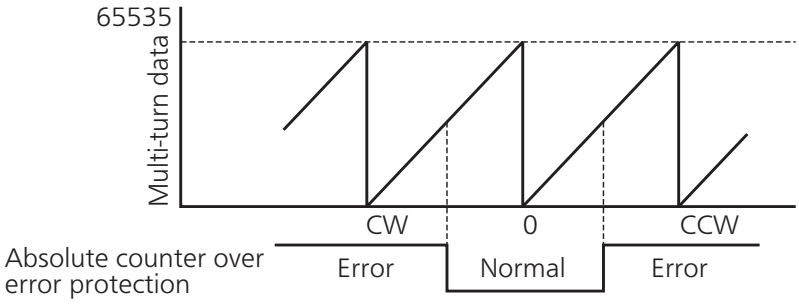

Single-turn data ← Single-turn data (H)×10000 h+Single-turn data (M) ×100 h+Single-turn data (L)

multi-turn data ← multi-turn data (H) ×100 h+multi-turn data (L)

Remarks If the multi-turn data of the above fig. is between 32768 to 65535, convert it to signed date after deducting 65536.

- Encoder status (L)-----1 represents error occurrence.

Encoder status (L)							
bit7	bit6	bit5	bit4	bit3	bit2	bit1	bit0
			0				
⑦	⑥	⑤		④	③	②	①

(1) Over-speed → Err42.0 (Absolute over-speed error protection)
(2) Full absolute status → Err47.0 (Absolute status error protection)
(3) Counter error → Err44.0 (Absolute single-turn counter error protection)
(4) Counter overflow → Err41.0 (Absolute counter over error protection)
(5) Multi-turn error → Err45.0 (Absolute multi-turn counter error protection)
(6) Battery error → Err40.0 (Absolute system down error protection)
(7) Battery alarm → Alarm No.A2 "Battery alarm"

- Encoder status (H)-----1 represents error occurrence.

Encoder status (H)							
bit7	bit6	bit5	bit4	bit3	bit2	bit1	bit0
0	0			0	0	0	0

Battery error

One of the following has occurred.
Battery alarm, multi-turn error, counter overflow, counter error, full absolute status, Counter overflow multi-turn error, battery error or battery alarm

Remarks For detail of the Encoder status, refer to the Encoder specification.

Remarks • Transmit the absolute data while fixing the motor with brake by turning to Servo-Off.

Related page • P.6-3 "Protective Function" • P.7-27 "Display of Battery Alarm"

External scale RS232 communication procedure

Refer to the instruction manual of the host for the transmission/reception method of command. Following shows the communication example of the driver to Pr5.31 “Axis address = 1” .

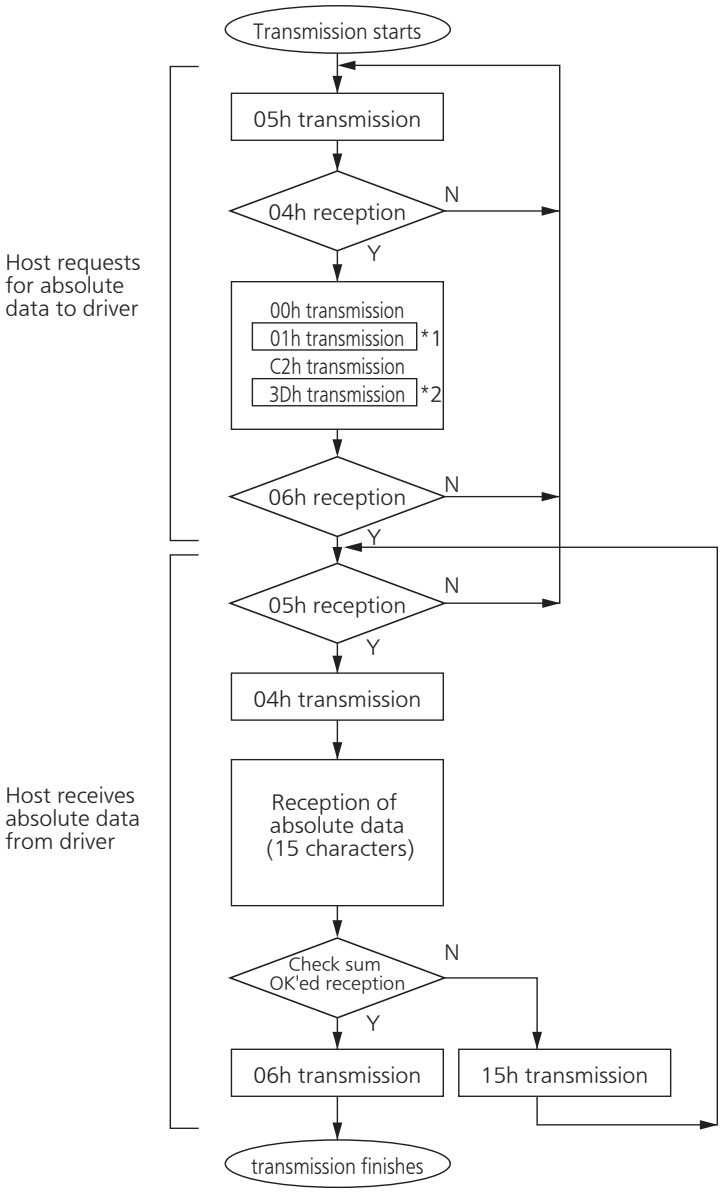

Data of *1 and *2 are determined by the setup of Pr5.31 “Axis address”.

Axis address (example)	Data of *1	Data of *2
0	00h	3Eh
1	01h	3Dh
2	02h	3Ch
3	03h	3Bh
4	04h	3Ah
5	05h	39h
6	06h	38h
7	07h	37h
8	08h	36h
9	09h	35h
10	0Ah	34h
11	0Bh	33h
12	0Ch	32h
13	0Dh	31h
14	0Eh	30h
15	0Fh	2Fh
16	10h	2Eh
17	11h	2Dh
18	12h	2Ch
19	13h	2Bh
20	14h	2Ah
21	15h	29h
22	16h	28h
23	17h	27h
24	18h	26h
25	19h	25h
26	1Ah	24h
27	1Bh	23h
28	1Ch	22h
29	1Dh	21h
30	1Eh	20h
31	1Fh	1Fh

Check sum becomes OK'ed when the lower 8-bit of the sum of the received absolute data (15 characters) is 0.

Enter the Pr5.31 value of the driver to which you want to communicate from the host to axis (*1 data) of the command block, and transmit the command according to the RS232 communication protocol. For details of communication, refer to P.7-29, "Communication".

Caution

- Allow 50 ms or longer interval for axis switching when you want to capture multiple axes data.
- It is recommended for you to repeat the above communication more than 2 times to confirm the absolute data coincide, in order to avoid mis-operation due to unexpected noise.

External scale RS485 communication procedure

Refer to the instruction manual of the host for the transmission/reception method of command. Following shows the communication example of the driver to Pr5.31 “Axis address = 1” .

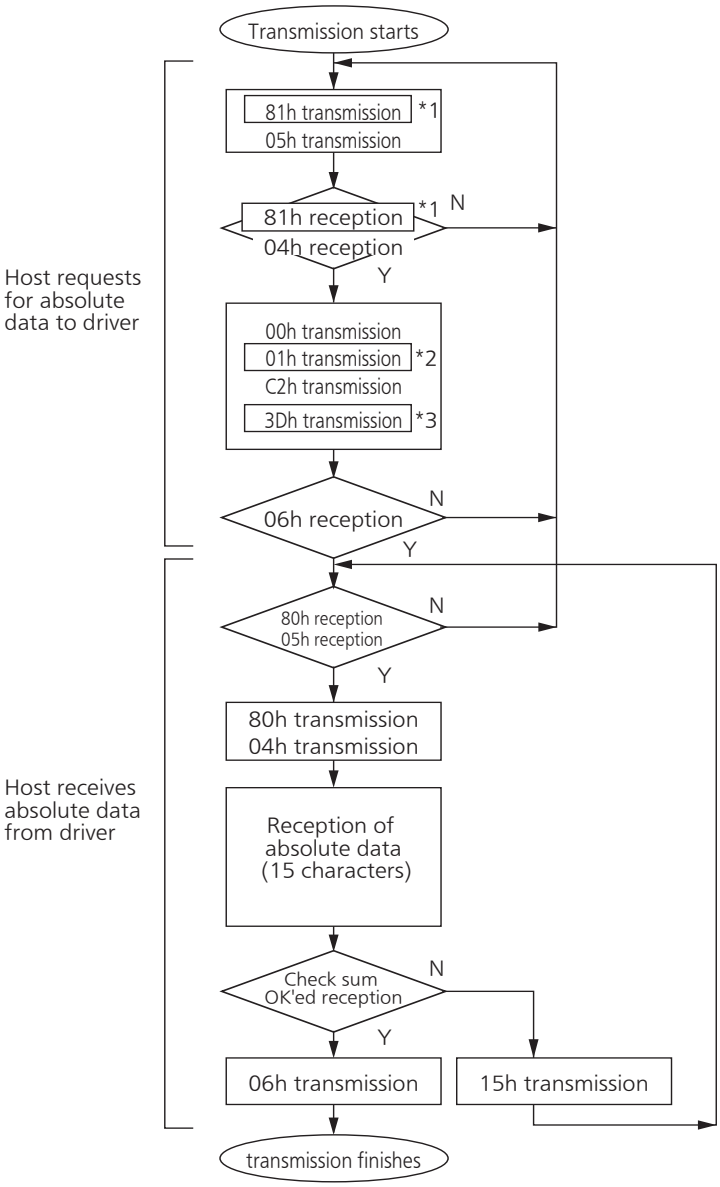

Data of *1, *2 and *3 are determined by the setup of Pr5.31 “Axis address”.

Axis address (example)	Data of *1	Data of *2	Data of *3
0	Not usable with RS485 communication		
1	81h	01h	3Dh
2	82h	02h	3Ch
3	83h	03h	3Bh
4	84h	04h	3Ah
5	85h	05h	39h
6	86h	06h	38h
7	87h	07h	37h
8	88h	08h	36h
9	89h	09h	35h
10	8Ah	0Ah	34h
11	8Bh	0Bh	33h
12	8Ch	0Ch	32h
13	8Dh	0Dh	31h
14	8Eh	0Eh	30h
15	8Fh	0Fh	2Fh
16	90h	10h	2Eh
17	91h	11h	2Dh
18	92h	12h	2Ch
19	93h	13h	2Bh
20	94h	14h	2Ah
21	95h	15h	29h
22	96h	16h	28h
23	97h	17h	27h
24	98h	18h	26h
25	99h	19h	25h
26	9Ah	1Ah	24h
27	9Bh	1Bh	23h
28	9Ch	1Ch	22h
29	9Dh	1Dh	21h
30	9Eh	1Eh	20h
31	9Fh	1Fh	1Fh

Check sum becomes OK'ed when the lower 8-bit of the sum of the received absolute data (15 characters) is 0.

Command from the host will be transmitted to the desired driver based on RS485 transmission protocol. For details of communication, refer to P.7-29, "Communication".

Caution

- Allow 50 ms or longer interval for axis switching when you want to capture multiple axes data.
- It is recommended for you to repeat the above communication more than 2 times to confirm the absolute data coincide, in order to avoid mis-operation due to unexpected noise.

Composition of external scale absolute data

Using 15-character data received through RS232/RS485, organize 1-turn data and multi-turn data.

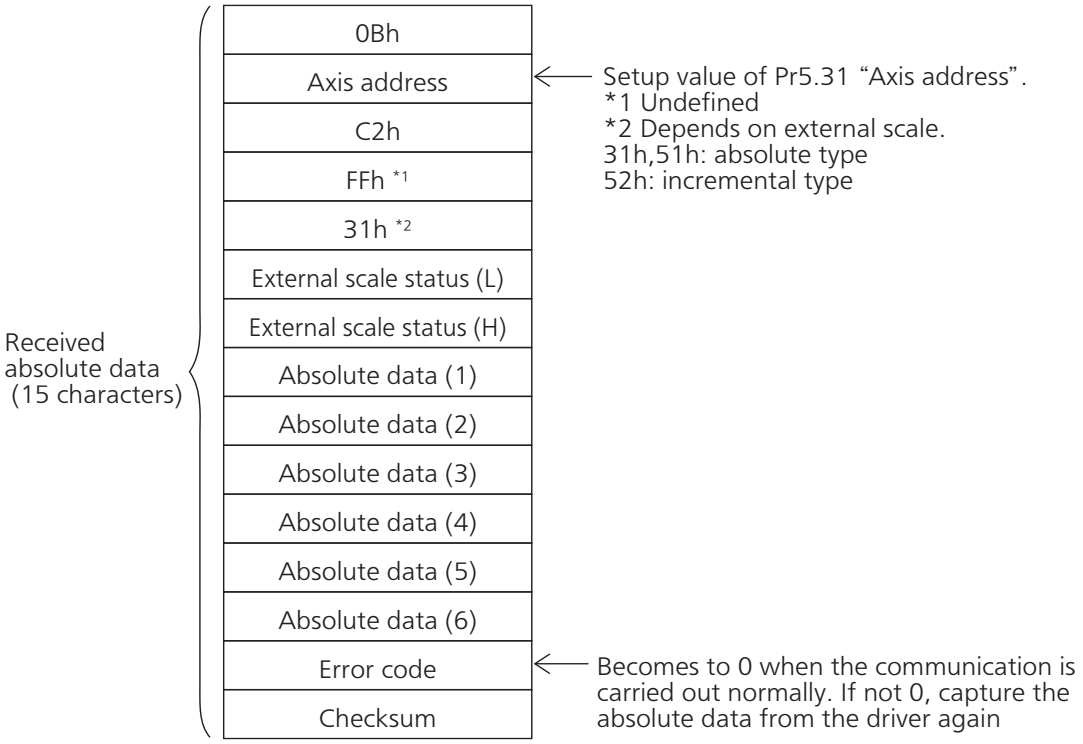

External scale absolute data

← Absolute data (6) ×10000000000h
+Absolute data (5) ×100000000h
+Absolute data (4) ×1000000h
+Absolute data (3) ×10000h
+Absolute data (2) ×100h
+Absolute data (1)

Absolute data of external scale is represented as 48 bit number (negative value is represented as two's complement).

Remarks If the multi-turn data of the above fig. is between 32768 to 65535, convert it to signed date after deducting 65536.

- External scale status (L)----1 represents error occurrence.

External scale status (L)							
bit7	bit6	bit5	bit4	bit3	bit2	bit1	bit0
			0				
(1)	(2)	(3)	(4)	(5)	(6)	(7)	(8)

(1) Alarm No. A8 "External scale error alarm"

(2) Alarm No. A8 "External scale error alarm"

(3) Err51.5 "External scale status 5 error protection"

(4) Err51.4 "External scale status 4 error protection"

(5) Err51.3 "External scale status 3 error protection"

(6) Err51.2 "External scale status 2 error protection"

(7) Err51.1 "External scale status 1 error protection"

(8) Err51.0 "External scale status 0 error protection"

- External scale status (H)----1 represents error occurrence.

External scale status (H)							
bit7	bit6	bit5	bit4	bit3	bit2	bit1	bit0
0	0			0	0	0	0

Logical sum of bit6 and bit 7 of external scale status (L)

Logical sum of bit0 to bit 5 of external scale status (L)

Remarks For detail of the external scale status, refer to the external scale specification.

Remarks • Transmit the External scale absolute data while fixing the motor with brake by turning to Servo-Off.

Related page • P.6-3 "Protective Function" • P.7-27 "Display of Battery Alarm"

2. Absolute system

Display of Battery Alarm

Following alarm will be displayed when making the front panel to alarm execution mode of monitor mode.

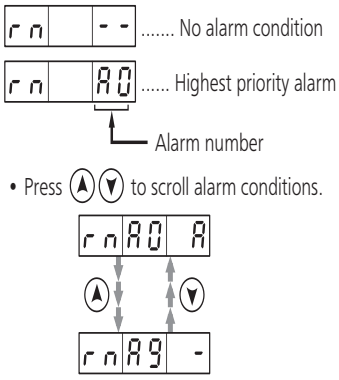

• Kinds of alarm

alarm No.	Alarm	Content	Latched time *1
A0	Overload protection	Load factor is 85 % or more the protection level.	1 s to 10 s or ∞
A1	Over-regeneration alarm	Regenerative load factor is 85% or more the protection level.	10 s or ∞
A2	Battery alarm	Battery voltage is 3.2 V or lower.	Fixed at ∞
A3	Fan alarm	Fan has stopped for 1 sec.	1 s to 10 s or ∞
A4	Encoder communication alarm	The number of successive encoder communication errors exceeds the specified value.	1 s to 10 s or ∞
A5	Encoder overheat alarm	The encoder detects overheat alarm.	1 s to 10 s or ∞
A6	Oscillation detection alarm	Oscillation or vibration is detected.	1 s to 10 s or ∞
A7	Lifetime detection alarm	The life expectancy of capacity or fan becomes shorter than the specified time.	Fixed at ∞
A8	External scale error alarm	The external scale detects the alarm.	1 s to 10 s or ∞
A9	External scale communication alarm	The number of successive external scale communication errors exceeds the specified value.	1 s to 10 s or ∞
AC	Deterioration diagnosis warning	Load characteristic estimates and torque command under constant speed has exceeded the set range.	1 s to 10 s or ∞
C3	Main power off warning	In case that Pr7.14 (Detection time of main power off warning) is 10 to 1999, the mains power between L1 and L3 has stopped instantaneously for more than the time prescribed in Pr7.14.	1 s to 10 s or ∞

*1 Alarms can be cleared by using the alarm clear. Because the all existing alarms are kept cleared while the alarm clear input (A-CLR) is kept ON, be sure to turn it OFF during normal operation. Either 1 s-10 s or ∞ can be selected by using user parameter.
Exception: Battery alarm is fixed at ∞ because it is latched by the encoder.
Because the end of life alarm means that the life expectancy cannot be extended, the alarm is set at ∞ .

How to Clear the Battery Alarm

Replace the battery for absolute encoder when battery alarm occurs according to P.7-14, "How to Replace the Battery". After replacement, clear the battery alarm in the following 3 methods.

(a) "Connector X4" Connecting Alarm clear input (A-CLR) to COM− for more than 120 ms.
(b) Executing the alarm clear function in auxiliary function mode by using the front panel.
(c) Click the "Battery warning" Clear button, after select the "Absolute encoder" tab in the monitor display window by using the PANATERM (option).

Related page
• P.2-134 “Alarm Clear Screen” • P.3-34 “Inputs and outputs on connector X4”
• P.7-28 “Outline of Setup Support Software, “PANATERM”’”

3. Outline of Setup Support Software, "PANATERM"

Setup on the PC

SE	SG	SF
○	○	○

Connector X1 of MINAS A6 can be connected to your PC through USB cable for computer. Once you download the setup support software PANATERM from our web site and install it to your PC, the following tasks can be easily performed.

Outline of PANATERM

With the PANATERM, you can execute the followings.
(1) Setup and storage of parameters, and writing to the memory (EEPROM).
(2) Monitoring of I/O and pulse input and load factor.
(3) Display of the present alarm and reference of the error history.
(4) Data measurement of the wave-form graphic and bringing of the stored data.
(5) Normal auto-gain tuning
(6) Frequency characteristic measurement of the machine system.

Note Distribution media such as CD-ROM for this software are not prepared.
Download the software from our web site and install it to your PC.

How to Connect

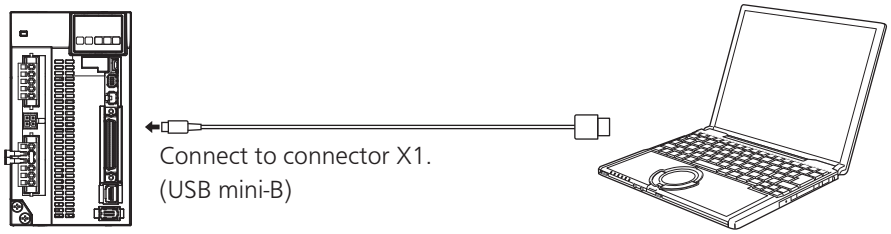

Download setup support software PANATERM
from our web site and install it to your PC.

- USB cable

The connection cable should be provided with USB mini-B connector at the driver side and the PC compatible connector on the other end.
If the cable has no noise filter, install a signal noise filter (DV0P1460) to both ends of the cable.

System required for PANATERM

To use PANATERM, the following system components are required.

- PC

OS	Windows® 7 (64-bit Ver.) Windows® 8 (64-bit Ver.) Windows® 10 (64-bit Ver.) (Japanese, English, Chinese(simplified) or Korean version)
CPU	800 MHz or better
Memory	System memory: 256MB or more Card memory: 32MB or more
Hard disk	512MB or more free space
Serial communication	USB port, COM port(communication speed 2400bps to 115200 bps) * COM port will be applied when use RS232. Recommended communication speed is above 9600bps.

- Display

Resolution	1024 × 768 pixel or more
No. of colors	24-bit color (True Color) or better

* Please confirm the latest system requirements on the homepage.

4. Communication

Outline

SE	SG	SF
	○	○

You can connect up to 32 MINAS-A6 series with your computer or NC via serial communication based on RS232 and RS484, and can execute the following functions.

(1) Change over of the parameters
(2) Referring and clearing of alarm data status and history
(3) Monitoring of control conditions such as status and I/O.
(4) Referring of the absolute data
(5) Saving and loading of the parameter data

■ Merits

- You can write parameters from the host to the driver in batch when you start up the machine.
- You can display the running condition of machine to improve serviceability.
- You can compose multi-axis absolute system with simple wiring.

■ To the use of Modbus communications client

RS485 serial communications corresponding to our compant unique commands and Modbus.

Using the modbus customers please refer to the Technical Reference.

(Modbus communication)

Technical Reference is published on our website.

Related page
- P.2-63 "Wiring to the Connector, X1"
- P.7-12 "Absolute system"
- P.7-28 "Outline of Setup Support Software, "PANATERM"

Connection of Communication Line

MINAS-A6 series provide 2 types of communications ports of RS232 and RS485, and support the following 3 types of connection with the host.

- RS232 communication

  Connect the host and the driver in one to one with RS232, and communicate according to RS232 transmission protocol.

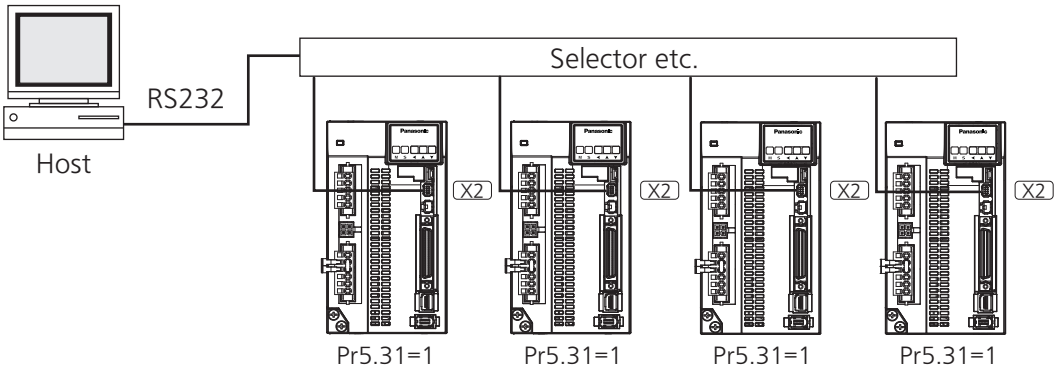

- Set up the module ID of MINAS-A6. In the above case, you can set any value of 0 to 31. You can set the same module ID as long as the host has no difficulty in control.

- RS232 and RS485 communication

  When you connect one host to multiple MINAS-A6, connect the host to connector X2 of one driver with RS232 communication, and connect each MINAS-A6 with RS485 communication. Set up the Pr5.31 of the driver to 0 which is connected to the host, and set up 1 to 31 to other drivers each.

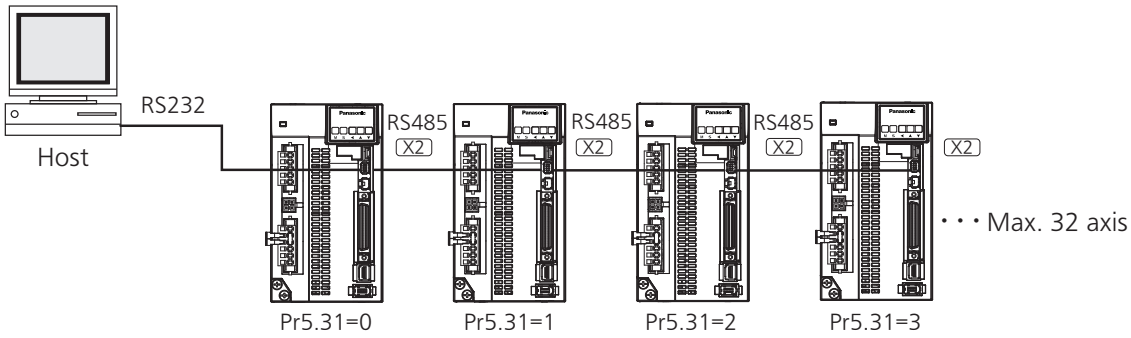

- RS485 communication
  Connect the host to multiple MINAS-A6 with RS485 communication, set up the Pr5.31 of each front panel of MINAS-A6 to 1 to 31.

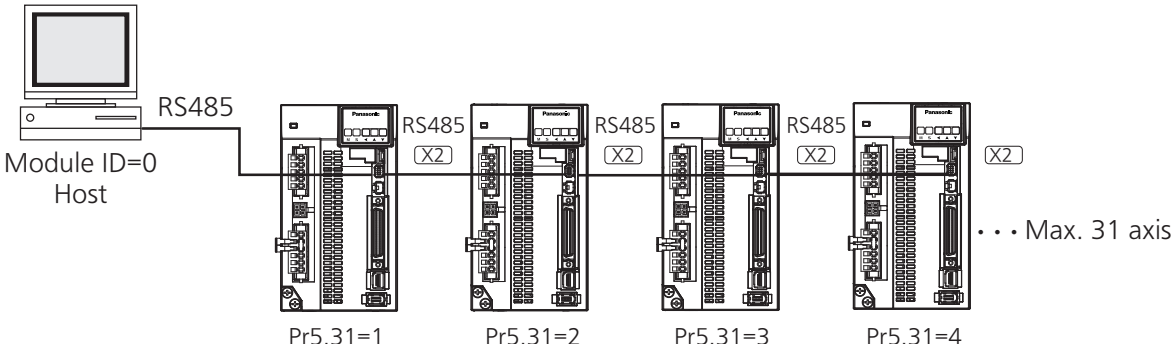

Allow 50 ms or longer interval for switching the axes while capturing data of multiple axes.

Interface of Communication Connector

- Connection to the host with RS232

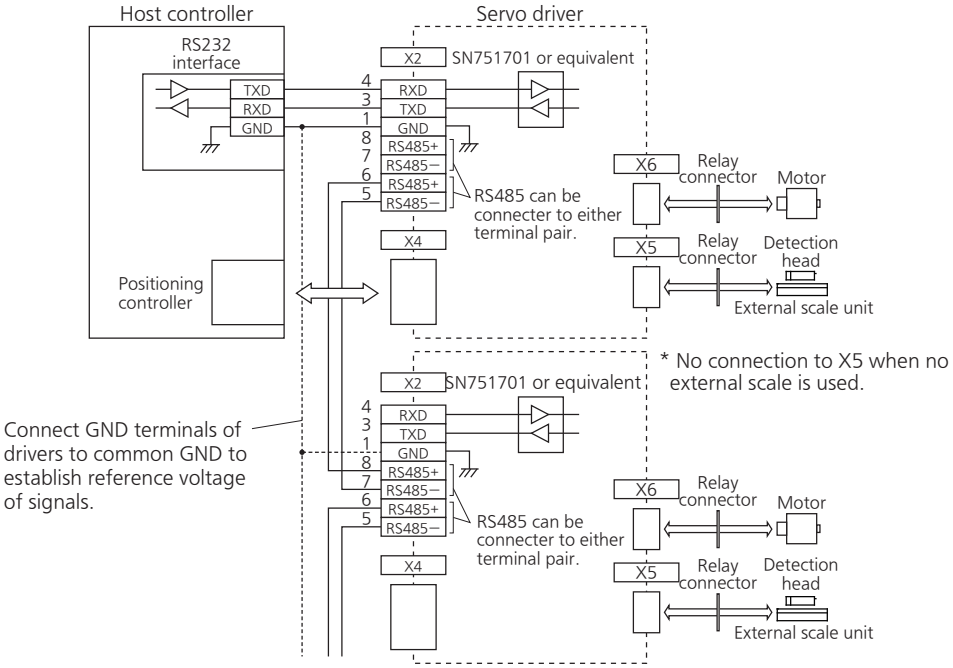

- Connection to the host with RS485

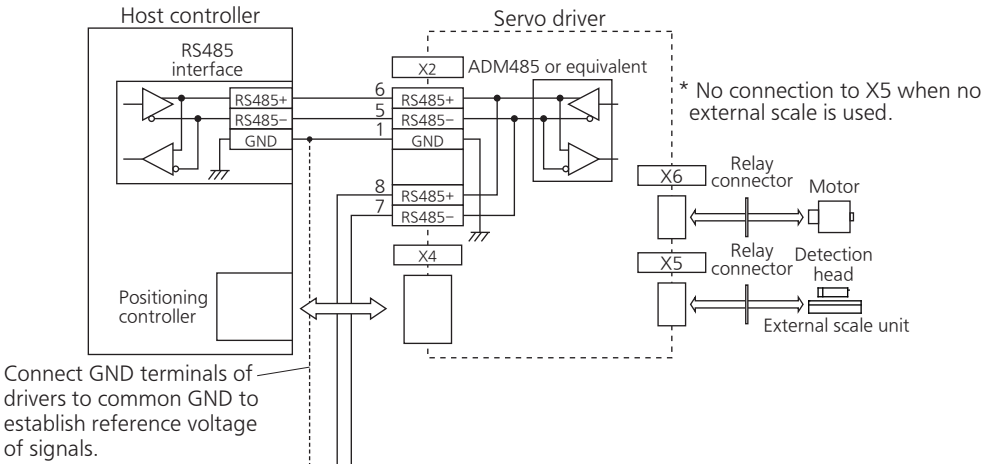

Communication Method

	RS232	RS485
	Full duplex, asynchronous	Half duplex, asynchronous
Communication baud rate	2400, 4800, 9600, 19200, 38400, 57600, 115200 bps	2400, 4800, 9600, 19200, 38400, 57600, 115200 bps
Data	8 bit	8 bit
Parity	none	none
Start bit	1 bit	1 bit
Stop bit	1 bit	1 bit

- Set up the RS232 communication baud rate with Pr5.29, and RS485 communication baud rate with Pr5.30. The change of these parameters will be validated after the control power entry. For details, refer to the following list of parameters related to communication.

List of User Parameters for Communication

Class	No.	Title	Setup value	Function
5	31	Axis address	0 to 127	Set the axis number for serial communication to 0 to 31. This parameter setup value has no effect on servo operation.
5	29	Baud rate setup of RS232 communication	0 to 6	Set up the communication speed of RS232 communication. 0 : 2400[bpps], 1 : 4800[bps], 2 : 9600[bps], 3 : 19200[bps], 4 : 38400[bps], 5 : 57600[bps], 6 : 115200[bps] Updated setup of is validated upon turning on of control power.
5	30	Baud rate setup of RS485 communication	0 to 6	Set up the communication speed of RS485 communication. 0 : 2400[bpps], 1 : 4800[bps], 2 : 9600[bps], 3 : 19200[bps], 4 : 38400[bps], 5 : 57600[bps], 6 : 115200[bps] Updated setup of is validated upon turning on of control power.

- Required time for data transmission per 1 byte is calculated in the following formula in case of 9600[bps].

$$1000 / 9600 \times (\underbrace{1}_{\text{Start bit}} + \underbrace{8}_{\text{Data}} + \underbrace{1}_{\text{Stop bit}}) = 1.04\ [\text{ms/byte}]$$

Note that the time for processing the received command and time for switching the line and transmission/reception control will added to the actual communication time.

- Handshake code

Following codes are used for line control.

Title	Code	Function
ENQ	05h (Module recognition byte of the transmitted)	Enquire for transmission
EOT	04h (Module recognition byte of the transmitted)	Ready for receiving
ACK	06h	Acknowledgement
NAK	15h	Negative acknowledgement

ENQ .... The module (host or driver) sends out ENQ when it has a block to send.
EOT ..... The module (host or driver) sends out EOT when it is ready to receive a block. The line enters to a transmission mode when ENQ is transmitted and EOT is received.
ACK .... When the received block is judged normal, the module (host or driver) will send out ACK.
NAK .... When the received block is judged abnormal, NAK will be sent. A judgment is based on checksum and timeout.

Caution

1 byte of module recognition is added to ENQ and EOT at RS485 communication.
Module recognition byte... Make the Pr5.31 value of the front panel as a module ID, and data which makes its bit7 as 1, becomes a module recognition byte.

bit7	bit6	bit5	bit4	bit3	bit2	bit1	bit0
1	Module ID						

Module ID :The module ID of the host side will be 0 in case of RS485 communication, therefore set up Pr5.31 of MINAS-A6 to 1 to 31.

Transmission Sequence

- Transmission protocol
  - In case of RS232

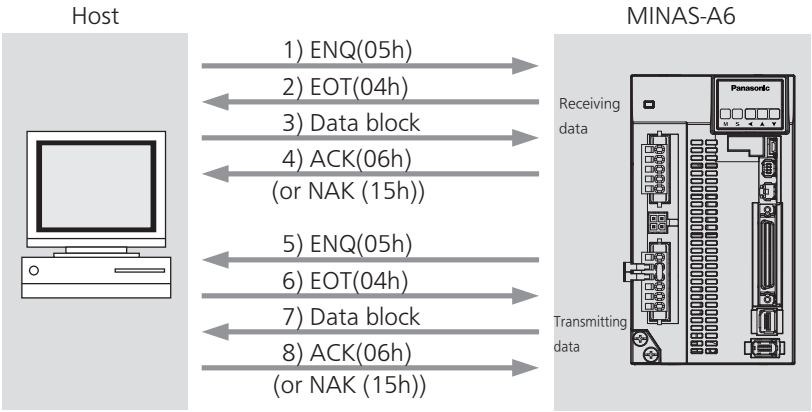

  - In case of RS485

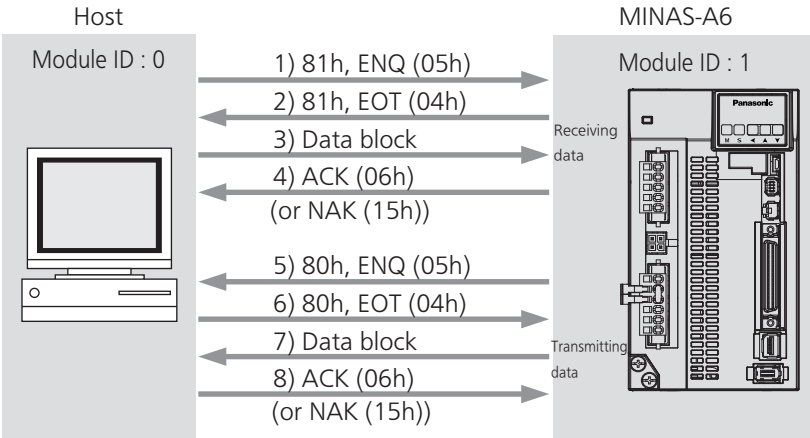

- Line control
  Decides the direction of transmission and solves the contention.
  Reception mode... From when the module (host or driver) returns EOT after receiving ENQ.
  Transmission mode... From when the module (host or driver) receives EOT after transmitting ENQ.
  At contention of transmission and reception... Slave side will enter to reception mode when it receives ENQ while waiting for EOT after transmitting ENQ, by giving priority to ENQ (of master side).
- Transmission control
  On entering to transmission mode, the module transmits the command block continuously and then waits for ACK reception. Transmission completes at reception of ACK.. ACK may not be returned at transmission failure of command byte counts. If no ACK is received within T2 period, or other code than NAK or ACK is received, sequence will be retried. Retry will start from ENQ.
- Reception control
  On entering to reception mode, the module receives the transmitted block continuously. It will receive the command byte counts from the first byte, and continuously receive extra 3 bytes. It will return ACK when the received data sum becomes 0, by taking this status as normal. In case of a check sum error or a timeout between characters, it will return NAK.

- Data Block Composition

Below shows the composition of data block which is transmitted in physical phase.

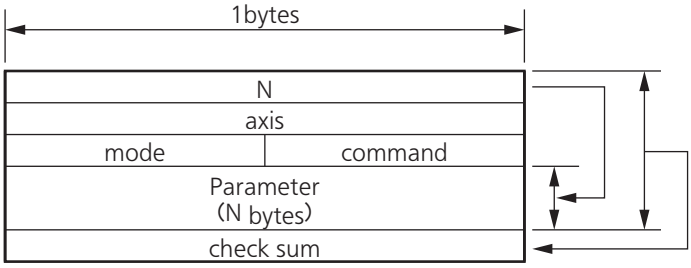

N : Command byte counts (0 to 240)
Shows the number of parameters which are required by command.
axis : Sets up the value of Pr5.31.(0 to 127)
command : Control command (0 to 15)
mode : Command execution mode (0 to 15)
Contents vary depending on the mode.
check sum : 2's complement of the total number of bytes, ranging from the top to the end of the block

- Protocol Parameter

Following parameters are used to control the block transmission. You can set any value with the INIT command (described later).

Title	Function		Initial value	Setup range	Unit
T1	Time out between characters	RS232	5 (0.5 sec)	1 to 255	0.1 sec
		RS485	1 (0.1 sec)		
T2	Protocol time out	RS232	5 (0.5 sec)	1 to 255	1 sec
		RS485	1 (0.1 sec)		
T6	Driver response time	RS232	0 (0 ms)	0 to 255	1 ms
		RS485	6 (6 ms)	2 to 255	
RTY	Retry limit		1 (once)	1–8	Once
M/S	Master/Slave		0 (Slave)	0, 1 (Master)	

T1: • Permissible time interval for this driver to receive the consecutive character cods which exists between the module recognition bytes and ENQ/EOT, or in the transmission/reception data block. Time out error occurs and the driver returns NAK to the transmitter when the actual reception time has exceed ed this setup time.

T2: • Permissible time interval for the driver to transmit ENQ and to receive EOT. If the actual reception time exceeds this setup, this represents that the receiver is not ready to receive, or it has failed to receive ENQ code in some reason, and the driver will re-transmit ENQ code to the receiver. (retry times)
• Permissible time interval for the driver to transmit EOT and to receive the reception of the 1st character code. The driver will return NAK and finishes the reception mode if the actual reception has exceeded this setup time.
• Permissible time interval for the module to transmit the check sum bytes and to receive ACK. The module will re-transmit ENQ code to the receiver in the same way as the NAK reception, if the actual reception time exceeds this setup time.

T6: • Permissible time interval for the driver to receive ENQ and to transmit EOT; Permissible time interval for the driver to receive the check sum bytes and to transmit ACK; and Permissible time interval for the driver to receive EOT and to transmit the 1st character.

RTY: Maximum value of retry times. Transmission error occurs if the actual retry has exceeds this setup value.

M/S: Switching of master and slave. When contention of ENQ has occurred, the module decides which is to be given priority.
Priority is given to the transmitter which is set up as a master. (0: Slave mode, 1 : Master mode)

Example of Data Communication

- e.g. Reference of Absolute Data

  When you connect the host to one driver with RS232 communication, and connect multiple MINAS-A6 with RS485 communication. Following flow chart describes the actual flow of the communication data when you want to capture the absolute data of the module ID=1.

e.g. of system composition

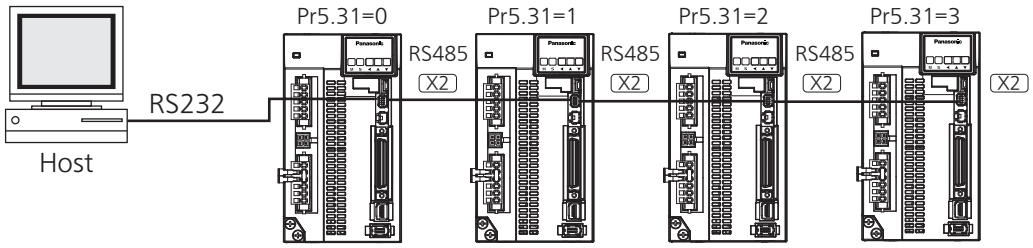

e.g. of capturing the absolute data

Following shows the communication data in time series when you want to capture the absolute data. Data is presented in hexadecimals.

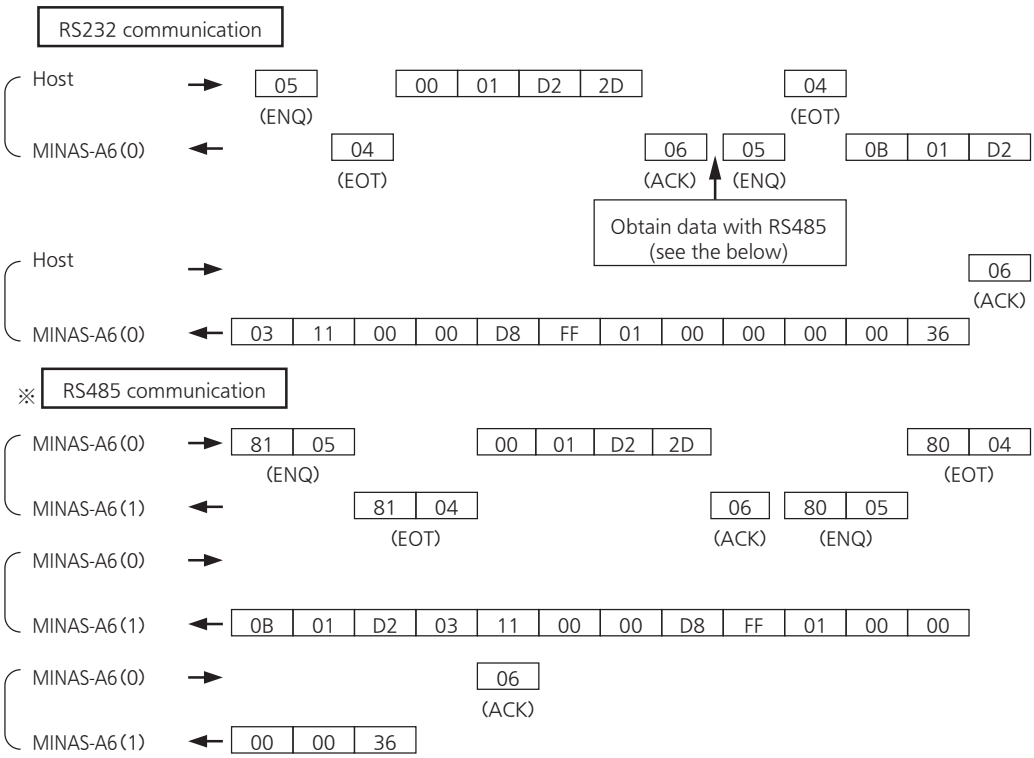

Caution See the below for the captured data. Refer to P.7-53, "Read out of Absolute Encoder " of details of communication command, for the data composition.

Multi-turn data : 0000h = 0
Single turn data : 01FFD8h = 131032

Allow 50ms or longer interval for switching the axis while capturing data of multiple axes.

- Example of Parameter Change

  Following shows the communication data in time series when you change parameters. Communication in general will be carried out in sequence of (1) Request for capturing of execution right, (2) Writing of individual parameter, and (3) Writing to EEPROM when saving of data is required, and (4) Release of execution right. Here the hardware connection shows the case that the driver (user ID=1) is directly connected to the host with RS232. Date is presented in hexadecimals.

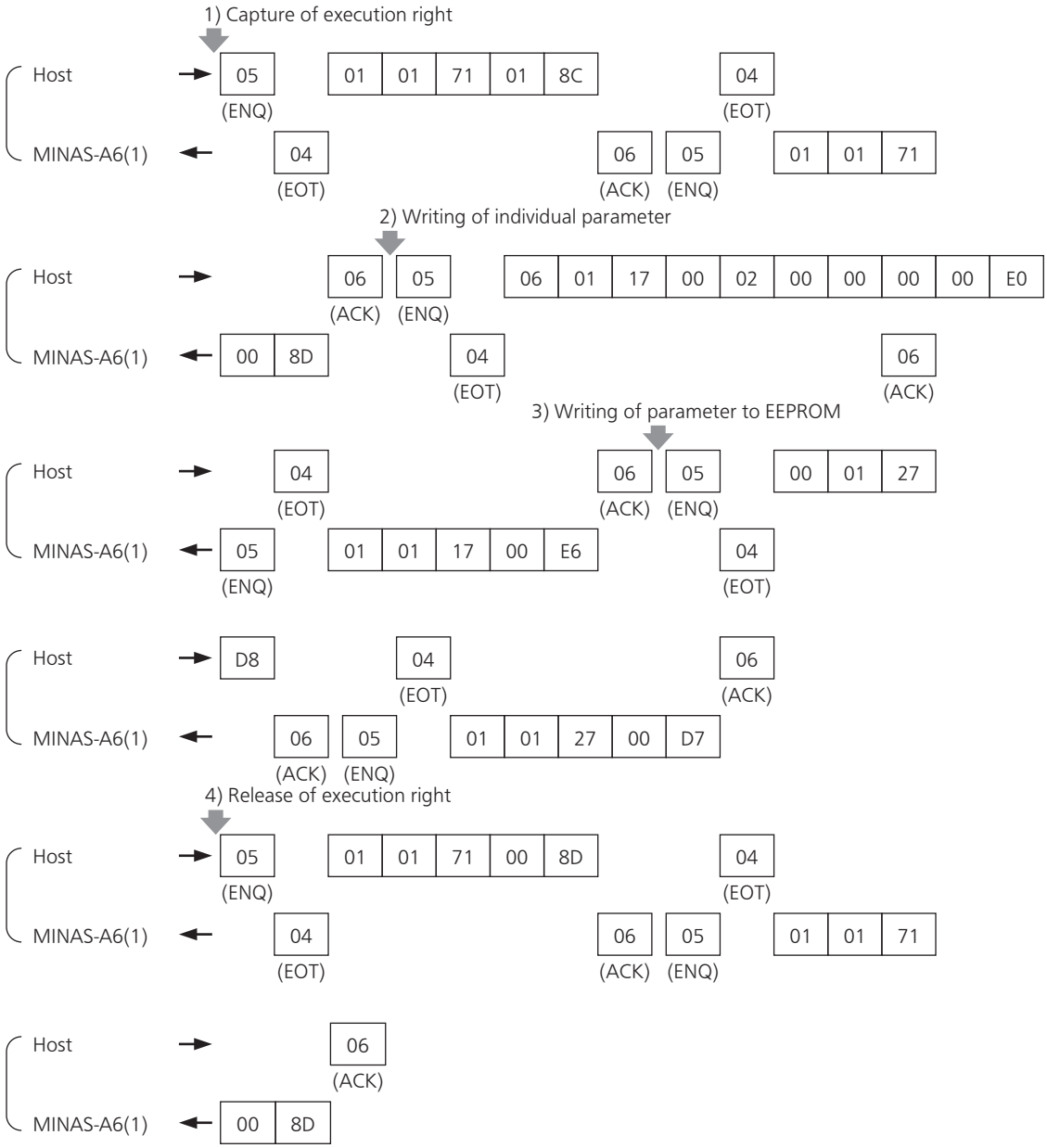

Caution For details of command, refer to P.7-42, "Details of Communication Command".

Status Transition Chart

- RS232 Communication

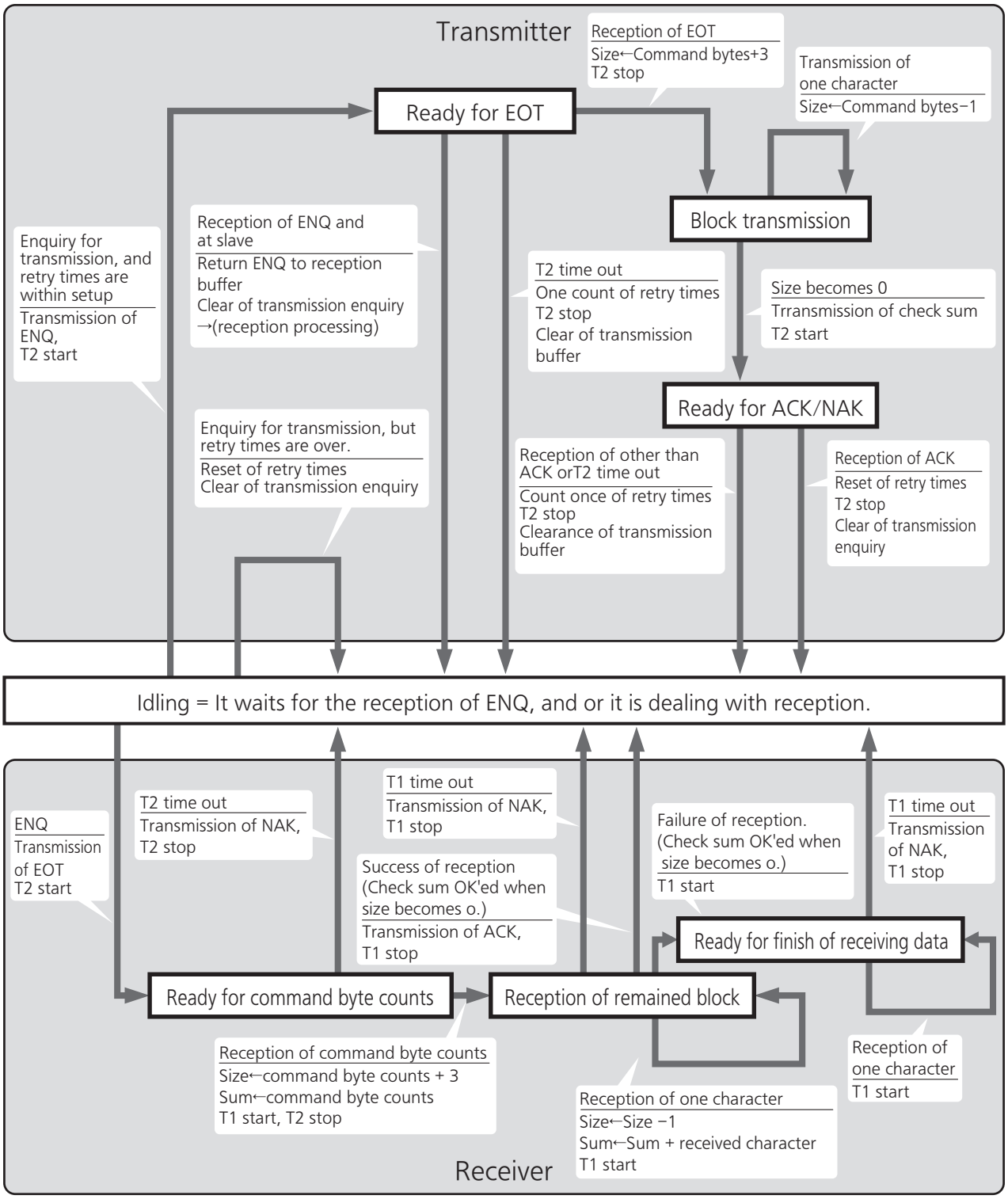

- RS485 Communication

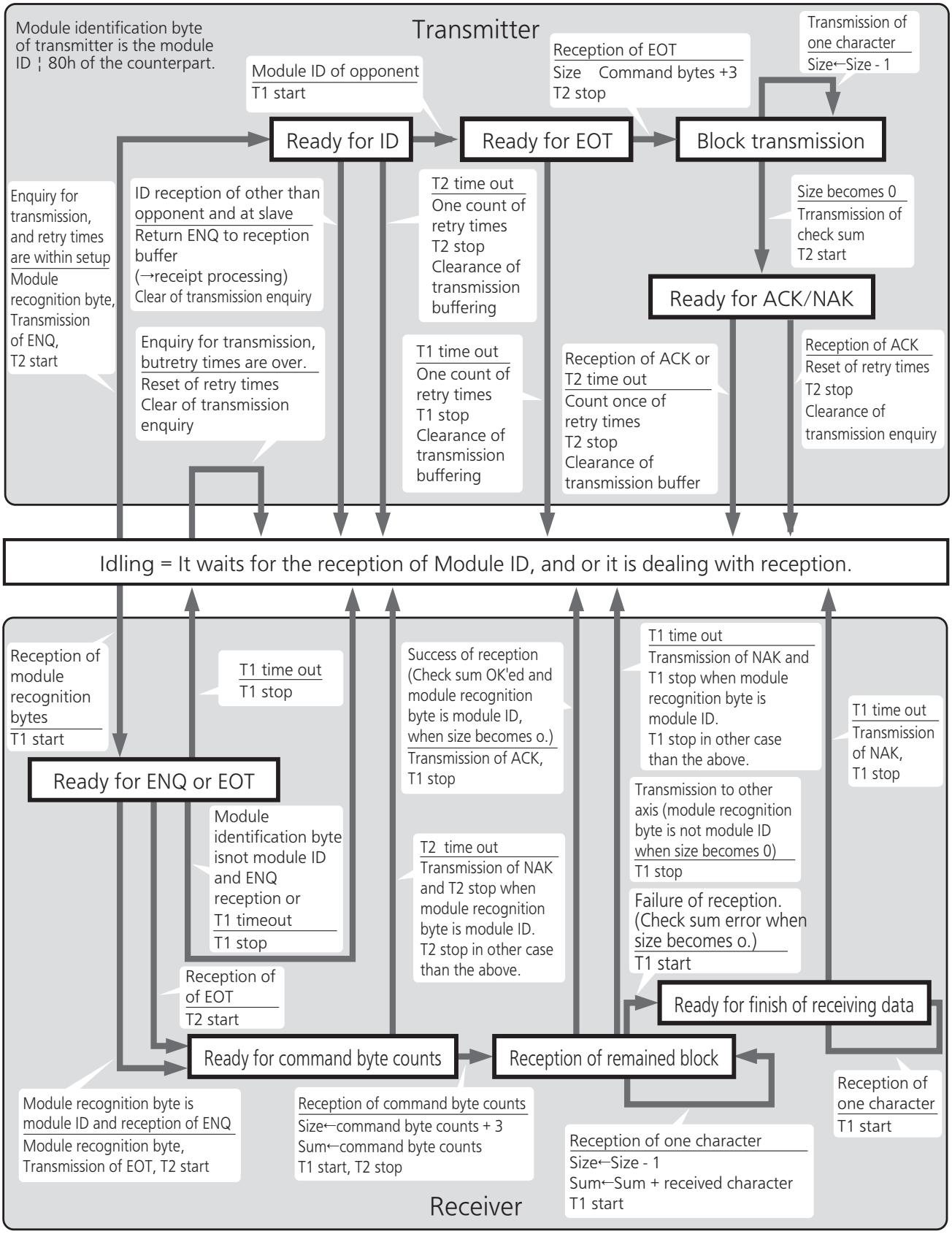

Timing of Data Communication

- In case of RS485 (RS232 to follow)

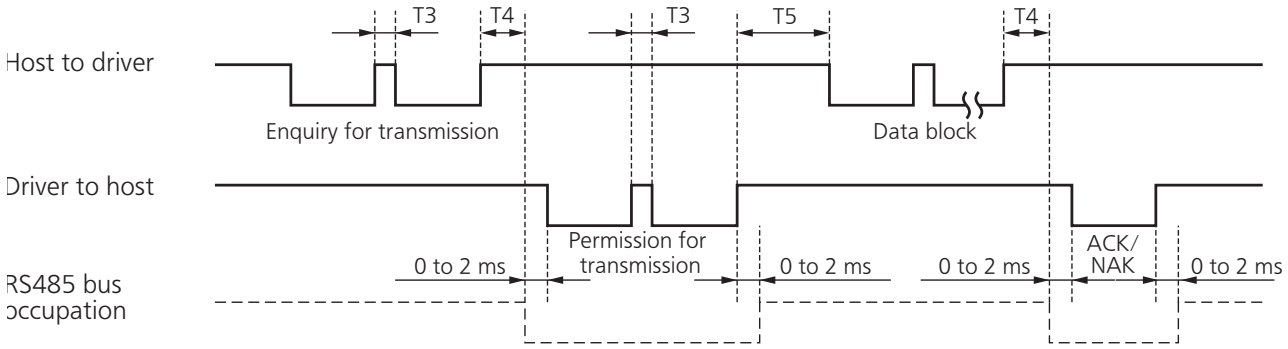

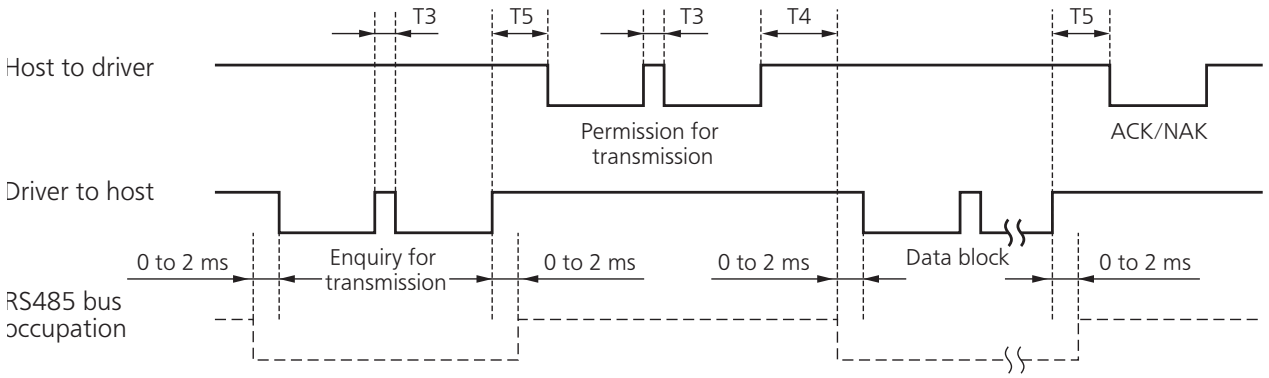

Symbol	Title	Minimum	Maximum
T3	Continuous inter-character time	Stop bit length	Protocol parameter T1
T4	Response time of driver	Protocol parameter T6	Protocol parameter T2
T5	Response time of host	2 ms	Protocol parameter T2

Caution Above time represents a period from the rising edge of the stop bit.

4. Communication

List of Communication Command

command	mode	Content
0		NOP
	1	Read software version information
	5	Read driver model
	6	Read motor model
	A	Read driver serial number
	B	Read motor serial number
1		INIT
	7	Obtain, release execution right
	8	Set RS232 protocol parameter
	9	Set RS485 protocol parameter
2		POS, STATUS, I/O
	0	Read status
	1	Read command pulse counter
	2	Read feedback pulse counter
	4	Read current velocity
	5	Read current torque output
	6	Read current deviation counter
	7	Read input signal
	8	Read output signal
	9	Read current velocity, torque and deviation counter
	A	Read status, input signal, and output signal
	B	Read overload load ratio
	C	Read external scale
	D	Read absolute encoder
	E	Read external scale deviation and aggregate pulse
7		PARAMETER
	0	Read individual user parameters
	1	Write individual user parameters
	2	Write user parameters into EEPROM
	6	Read individual user parameter attributes
	7	Read multiple user parameter attributes
	8	Write multiple user parameters
9		ALARM
	0	Read current alarm data
	2	Read batched alarm history
	3	Clear alarm history
	4	Alarm clear
	B	Absolute encoder clear

- Use only the abovementioned commands.
  Action of the driver cannot be guaranteed in case commands other than those listed above have been transmitted.
- In the event the number of received data with the abovementioned command is in error, regardless of the communication command, a single byte transmission communication data (error code only) will be transmitted.

command	mode
0	1

• Read software version information

Reception data

0	
axis	
1	0
checksum	

Transmission data

3	
axis	
1	0
Version (Higher)	
(Lower)	
Error code	
checksum	

Error code

bit7	6	5	4	3	2	1	0
0 : Normal 1 : Error		Command error	RS485 error				

- Version information will be returned with V.0.00 being separated into higher data and lower data. (Decimal point will be returned, expressed by 0 for the lower four (4) bits of the higher data.)
- Version shall be indicated by numbers ranging from 0 to 9.(Example: Ver 3.13 will be expressed as upper data: 13h and lower data: 06h.)

command	mode
0	5

• Read driver model

Reception data

0	
axis	
5	0
checksum	

Transmission data

0Dh	
axis	
5	0
Driver model name (higher)	
≈	≈
Driver model name (lower)	
Error code	
checksum	

Error code

bit7	6	5	4	3	2	1	0
0 : Normal 1 : Error		Command error	RS485 error				

- Model name of driver is transmitted in 12 ASCII code characters.
  (Example) "MADLT15SF***"

command	mode
0	6

• Read motor model

Reception data

0	
axis	
6	0
checksum	

Transmission data

0Dh	
axis	
6	0
Motor model name (Higher)	
≈	≈
Motor model name (Lower)	
Error code	
checksum	

Error code

bit7	6	5	4	3	2	1	0
0 : Normal 1 : Error		Command error	RS485 error				

- Model name of motor is transmitted in 12 ASCII code characters.
  (Example) "MSMF012L1***"

command	mode
0	A

• Read out of driver serial number

Reception data

0	
axis	
A	0
checksum	

Transmission data

5	
axis	
A	0
Production year	
Production month	
Serial in the month(Lower)	
Serial in the month(Higher)	
Error code	
checksum	

Error code

bit7	6	5	4	3	2	1	0
0 : Normal 1 : Error		Command error	RS485 error				

■Read production serial number of the driver.
■Serial number in the month(lower/higher) is binary data.
■Range of serial number in the month(higher/lower) is 0 to 255.
Serial number in the month(Decimal)can be calculated by the following formula.
Serial number in the month(Decimal)=Serial number in the month(higher) x 256 + Serial number in the month(lower)
■In the case that the serial number in the month indicated on the nameplate contains English, the data should be read out as converted to decimal in below table.

Serial number in the month indicated on the nameplate (Four digits in English)	Read data of serial number in the month (decimal)
0001	1
9999	9999
A000	10000
A999	10999
B000	11000
H999	17999
J000*1	18000
N999	22999
P000*1	23000
Z999	33999

*1 [I] and [O] are not used in English letters.

command	mode
0	B

• Read motor serial number

Received data

0	
axis	
B	0
checksum	

Transmitted data

5	
axis	
B	0
Production year	
Production month	
Serial in the month(Lower)	
Serial in the month (Higher)	
Error code	
checksum	

Error code

bit7	6	5	4	3	2	1	0
0 : Normal 1 : Error		Command error	RS485 error				

■Read production serial number of the driver.
■Serial number in the month(lower/higher) is binary data.
■Range of serial number in the month(higher/lower) is 0 to 255.
Serial number in the month(Decimal)can be calculated by the following formula.
Serial number in the month(Decimal)=Serial number in the month(higher) x 256 + Serial number in the month(lower)
■In the case that the serial number in the month indicated on the nameplate contains English, the data should be read out as converted to decimal in below table.

Serial number in the month indicated on the nameplate (Four digits in English)	Read data of serial number in the month (decimal)
0001	1
9999	9999
A000	10000
A999	10999
B000	11000
H999	17999
J000*1	18000
N999	22999
P000*1	23000
Z999	33999

*1 [I] and [O] are not used in English letters.

command	mode
1	7

• Capture and release of execution right

Reception data

1	
axis	
7	1
mode	
checksum	

Transmission data

1	
axis	
7	1
Error code	
checksum	

Error code

bit7	6	5	4	3	2	1	0
0 : Normal 1 : Error		Command error	RS485 error	mode error			in use

- Capture the execution right to prevent the conflict of the operation via communication and that with the front panel.
- Enquires for the capture of the execution right at parameter writing and EEPROM writing, and release the execution right after the action finishes.
- mode = 1 : Enquires for the capture of the execution right mode = 0 : Enquires for the release of the execution right
- You cannot operate with the front panel at other than monitor mode while the execution right is captured via communication.
- When the module fails to capture the execution right, it will transmit the error code of in use.

command	mode
1	8

• Setup of RS232 protocol parameter

Reception data

4	
axis	
8	1
T1	
T2	
T6	
0	RTY
checksum	

Transmission data

1	
axis	
8	1
Error code	
checksum	

Error code

bit7	6	5	4	3	2	1	0
0 : Normal 1 : Error		T6error	RS485 error	RTYerror	T2error	T1error	

- Until this command completes, previous set up protocol parameter will be processed.
  After this command has been executed, this parameter setup will be valid from the next command.
- RTY is 4-bit.
- Unit... T1 : 0.1 s, T2 : 0.1 s, T6 : 1 ms

command	mode
1	9

• Setup of RS485 protocol parameter

Reception data

4	
axis	
9	1
T1	
T2	
T6	
0	RTY
checksum	

Transmission data

1	
axis	
9	1
Error code	
checksum	

Error code

bit7	6	5	4	3	2	1	0
0 : Normal 1 : Error		T6error	RS485 error	RTYerror	T2error	T1error	

- Until this command completes, previously set up protocol parameter will be processed.
  After this command has been executed, this parameter setup will be valid from the next command.
- RTY is 4-bit.
- Unit... T1 : 0.1 s, T2 : 0.1 s, T6 : 1 ms

command	mode
2	0

• Read out of status

Reception data

0	
axis	
0	2
checksum	

Transmission data

3	
axis	
0	2
control mode	
status	
error code	
checksum	

status

bit7	6	5	4	3	2	1	0
				Positive direction running	Negative direction running	Slower than DB permission	Torque in-limit

Error code

bit7	6	5	4	3	2	1	0
0 : Normal 1 : Error		Command error	RS485 error				

- Control modes are defined as follows.

0	Position control mode
1	Velocity control mode
2	Torque control mode
3	Full-closed control mode

- positive direction/negative direction running : This becomes 1 when motor speed (after converted to r/min) is positive (positive direction) or negative (negative direction).
- Slower than DB permission : This becomes 1 when motor speed (after converted to r/min) is below 30 r/min.
- Torque in-limit : This becomes 1 when torque command is limited by analog input or parameter.

command	mode
2	1

• Read out of command pulse counter

Reception data

0	
axis	
1	2
checksum	

Transmission data

5	
axis	
1	2
counter value L	
H	
error code	
checksum	

Error code

bit7	6	5	4	3	2	1	0
0 : Normal 1 : Error		Command error	RS485 error				

- Module returns the present position in absolute coordinates from the starting point. (Total sum of accumulated command pulses)
- Counter value in 32 bit.
- Counter value will be "–" for negative direction and "+" for positive direction.

command	mode
2	2

• Read out of feedback pulse counter

Reception data

0	
axis	
2	2
checksum	

Transmission data

5	
axis	
2	2
counter value L	
H	
error code	
checksum	

Error code

bit7	6	5	4	3	2	1	0
0 : Normal 1 : Error		Command error	RS485 error				

- Module returns the present position of feedback pulse counter in absolute coordinates from the staring point.
- Counter value will be "–" for negative direction and "+" for positive direction.
- Feedback pulse counter is the total pulse counts of the encoder and represents the actual motor position traveled

command	mode
2	4

• Read out of present speed

Reception data

0	
axis	
4	2
checksum	

Transmission data

3	
axis	
4	2
Data (present speed) L	
H	
error code	
checksum	

Error code

bit7	6	5	4	3	2	1	0
0 : Normal 1 : Error		Command error	RS485 error				

- Reads out the present speed. (Unit : [r/min])
- Output value in 16 bit
- Speed will be "–" for negative direction and "+" for positive direction.

command	mode
2	5

• Read out of present torque output

Reception data

0	
axis	
5	2
checksum	

Transmission data

3	
axis	
5	2
Data (present torque) L	
H	
error code	
checksum	

Error code

bit7	6	5	4	3	2	1	0
0 : Normal 1 : Error		Command error	RS485 error				

- Reads out the present torque output. (Unit : Converted with "Rated motor torque = 2000)
- Output value in 16 bit
- Torque command will be "–" value for negative direction and "+" value for positive direction.

command	mode
2	6

• Read out of present positional command deviation

Reception data

0	
axis	
6	2
checksum	

Transmission data

5	
axis	
6	2
data (deviation) L	
H	
Error code	
checksum	

Error code

bit7	6	5	4	3	2	1	0
0 : Normal 1 : Error		Command error	RS485 error				

- Reads out the present positional command deviation. (Unit : [command unit]
- Output value in 32bit
- Becomes "+" when the encoder is located at negative direction against position command, and "−" when it is located at positive direction.

command	mode
2	7

• Read out of input signal

Reception data

0	
axis	
7	2
checksum	

Transmission data

5	
axis	
7	2
data L	
data H	
Error code	
checksum	

Error code

bit7	6	5	4	3	2	1	0
0 : Normal 1 : Error		Command error	RS485 error				

Data

bit7	6	5	4	3	2	1	0
For manufacturer's use	Switching of electronic gear 1	Speed zero clamp	Control mode switching	CCW over-travel inhibit	CW over-travel inhibit	Alarm clear	Servo-ON

bit15	14	13	12	11	10	9	8
For manufacturer's use	For manufacturer's use	Internal speed command selection 2	Internal speed command selection 1	For manufacturer's use	Counter clear	Gain switching	Command pulse input inhibition

bit23	22	21	20	19	18	17	16
Switching of electronic gear 2	Damping control switching 2	Torque limit switching	Internal speed command selection 3	Damping control switching 1	For manufacturer's use	For manufacturer's use	For manufacturer's use

bit31	31	29	28	27	26	25	24
For manufacturer's use	For manufacturer's use	For manufacturer's use	Safety input 2	Safety input 1	For manufacturer's use	Torque command sign	Speed command sign

- Logic of input signal is based on assignment set in the parameter.
- Because of the internal logical data after conversion of input, it does not directly correspond to the input signal from the connector X4.
- CW over-travel inhibit input and CCW over-travel inhibit input will change according to the input logic, even if they have been disabled by the parameter,

command	mode
2	8

• Read out of output signal

Reception data

0
axis
8 | 2
checksum

Transmission data

7
axis
8 | 2
data_L
data_H
alarm data_L
H
error code
checksum

error code

bit7	6	5	4	3	2	1	0
0 : Normal 1 : Error		Command error	RS485 error				

Data

bit7	6	5	4	3	2	1	0
For manufacturer's use	In-speed	Torque in-limit	Zero speed detection	Mechanical brake released	Positioning complete (In-position)	Servo-Alarm	Servo-Ready

bit15	14	13	12	11	10	9	8
Excite motor	Control power latch	Dynamic brake engagement	Control inrush suppression relay	Control regeneration brake	For manufacturer's use	At-speed	For manufacturer's use

bit23	22	21	20	19	18	17	16
Safety EDM	Speed command ON/OFF	Alarm attribute output	Speed in-limit output	2nd positioning complete (In-position)	Positional command ON/OFF	Alarm output 2	Alarm output 1

bit31	31	29	28	27	26	25	24
For manufacturer's use	For manufacturer's use	For manufacturer's use	For manufacturer's use	For manufacturer's use	For manufacturer's use	For manufacturer's use	For manufacturer's use

alarm data

bit7	6	5	4	3	2	1	0
Overload protection	Fan alarm	Over-regeneration alarm	Encoder communication alarm	Encoder overheat alarm	Lifetime detection alarm	For manufacturer's use	Battery alarm

bit15	14	13	12	11	10	9	8
For manufacturer's use	For manufacturer's use	For manufacturer's use			External scale communication alarm	Oscillation detection alarm	External scale error alarm

- The table below shows the relation of the signals and actions.

Signal title	0	1
Servo-Ready	Servo-Not Ready	At Servo-Ready
Servo-Alarm	Normal	At Servo-Alarm
Positioning completed	Positioning not completed	Positioning in-complete
Mechanical brake released	Mechanical brake engaged	Mechanical brake released
Zero speed detection	Zero speed not detected	Zero speed detected
Torque in-limit	Torque not in-limit	Torque in-limit
At-speed (Speed arrival)	Not at-speed(Speed not arrived)	Speed arriving
In-speed (Speed coincidence)	Not in-speed(Speed not coincided)	In-speed (Speed coincided)
Control regeneration brake	Turn off regeneration Tr	Turn on regeneration Tr
Control inrush suppression relay	Release inrush suppression relay	Operate inrush suppression relay
Dynamic brake engagement	Dynamic brake released	Dynamic brake engaged
Control power latch	Release power latch	Power abnormal latching
Excite motor	Energize motor	Servo free

- Because of the internal logical data before output conversion, it does not directly correspond to the output signal to the connector X4.
- Names and functions shown above are for MINAS-A6 . Some of input signals will have different meaning for different series.

command	mode
2	9

• Read out of present speed, torque and positional command deviation

Reception data

0	
axis	
9	2
checksum	

Transmission data

9	
axis	
9	2
data_L	
(speed) H	
data_L	
(torque) H	
data_L	
(deviation) H	
error code	
checksum	

Error cod

bit7	6	5	4	3	2	1	0
0 : Normal 1 : Error		Command error	RS485 error				

- Output value of speed and torque are in 16 bit and deviation in 32bit.
- Unit and sign of the output data is as same as that of command No. 24 (command = 2, mode = 4), 25 (mode = 5) and 26 (mode = 6).

command	mode
2	A

• Read out of status, input signal and output signal

Reception data

0	
axis	
A	2
checksum	

Transmission data

13 (0Dh)	
axis	
A	2
control mode	
status	
input signal L	
input signal H	
output signal L	
output signal H	
alarm data L	
alarm data H	
error code	
checksum	

Error cod

bit7	6	5	4	3	2	1	0
0 : Normal 1 : Error		Command error	RS485 error				

- Meaning of each bit of control mode, status, input signal, output signal and alarm data is as same as that of command No. 20 (command = 2, mode = 0), 27 (mode = 7) and 28 (mode =8).

command	mode
2	B

• Read overload load ratio

Received data

0	
axis	
B	2
checksum	

Transmitted data

9	
axis	
B	2
Manufacturer use L	
H	
Manufacturer use L	
H	
Overload load vaule L	
H	
Manufacturer use L	
H	
Manufacturer use L	
H	
Error code	
checksum	

Error code

bit7	6	5	4	3	2	1	0
0 : Normal 1 : Error			RS485 error				

• Returs overload ratio in the overload load ratio=0.2 % unit(500=100 %).

command	mode
2	C

• Read external scale

Reception data

0	
axis	
C	2
checksum	

Transmission data

11 (0Bh)	
axis	
C	2
External scale ID (L)	
(H)	
Status (L)	
(H)	
(L)	
Absolute position data (48bit)	
(H)	
Error code	
checksum	

External scale ID

- Please refer to external scale specifications for details of external scale ID.

Status (L)

- Please refer to the external scale specifications for details of external scale status.

Error code

bit7	6	5	4	3	2	1	0
0 : Normal 1 : Error		Command error	RS485 error				

- Command error will occur, when external scale position information monitor function under semi-closed control is invalid, in control mode other than full closed control.
- Absolute position data = 48bits (800000000000h to 7FFFFFFFFFFFh)

command	mode
2	D

• Read absolute encoder

Reception data

0	
axis	
D	2
checksum	

Transmission data

11 (0Bh)	
axis	
D	2
Encoder ID (L)	
(H)	
Status (L)	
(H)	
(L)	
1 revolution data	
(H)	
Multi rev data (L)	
(H)	
0	
Error code	
checksum	

Encoder ID

	Encoder ID (L)	Encoder ID (H)
23bit absolute	0Bh	A7h

"The situation of absolute 17 bit"
Status (L)

bit7	6	5	4	3	2	1	0
Battery alarm	System down	Multi-turn error	0	Counter overflow	Count error	Full absolute status	Over speed

Status (H)

- bit4 : System down
- bit5 : Battery alarm, multi-turn error, counter overflow, count error, full absolute status and logical sum of over speed

Error code

bit7	6	5	4	3	2	1	0
0 : Normal 1 : Error		Command error	RS485 error				

- Command error generated for encoder other than absolute.
- 1 revolution data = 23bit (000000h to 7FFFFFh)
- Multi revolution data = 16bit (0000h to FFFFh)

command	mode
2	E

• Read external scale deviation and aggregate pulse

Reception data

0	
axis	
E	2
checksum	

Transmission data

9	
axis	
E	2
(L)	
External scale	
FB aggregate pulse	
(H)	
(L)	
external scale deviation	
(H)	
Error code	
checksum	

Error code

bit7	6	5	4	3	2	1	0
0 : Normal 1 : Error		Command error	RS485 error				

- External scale FB pulse sum will return the present position of the external scale counter in absolute coordinates from the starting point.
- External scale FB pulse sum will be "-" for negative direction and "+" for positive direction.
- External scale deviation becomes "+" when the external scale is positioned at negative direction against position command, and "–" when it is positioned at positive direction.

command	mode
7	0

• Read individual parameters

Reception data

2	
axis	
0	7
Parameter classification	
Parameter No.	
checksum	

Transmission data

5	
axis	
0	7
(L)	
Parameter value	
(H)	
error code	
checksum	

Error code

bit7	6	5	4	3	2	1	0
0 : Normal 1 : Error		Command error	RS485 error	No.Error			

- Returns number error in case parameter classification and parameter number are out of range.
- Parameter value will be returned in value code extended to 32bits.

command	mode
7	1

• Write individual parameters

Reception data

6	
axis	
1	7
Parameter classification	
Parameter No.	
(L)	
Parameter value	
(H)	
checksum	

Transmission data

1	
axis	
1	7
Error code	
checksum	

Error code

bit7	6	5	4	3	2	1	0
0 : Normal 1 : Error	Data Error	Command error	RS485 error	No.Error			

- Returns number error in case parameter classification and parameter number are out of range.
- This command is to temporarily change the parameter. In case of writing onto EEPROM, please execute the EEPROM write parameter (mode =2).
- Please make sure to set all unused parameters to 0 (zero). Failure to do this may result in data error. Data error will also occur when parameter values outside the set range is transmitted.
- Please transmit parameters code extended into 32bits.

command	mode
7	2

• Write parameters into EEPROM

Reception data

0	
axis	
2	7
checksum	

Transmission data

1	
axis	
2	7
Error code	
checksum	

Error code

bit7	6	5	4	3	2	1	0
0 : Normal 1 : Error	Data Error	Command error	RS485 error			Control LV	

- Write set parameters into EEPROM.
- Transmission data will be replied after completion of writing into EEPROM.
  It may take about 5 seconds maximum, to write onto the EEPROM. (when all parameters are changed)
- Data error will occur when writing fails.
- In case of control power supply LV, control LV error code will be returned and write will not be take place.

command	mode
7	6

• Read individual user parameter and attributes

Reception data

2	
axis	
6	7
Parameter classification	
Parameter No.	
checksum	

Transmission data

17 (11h)	
axis	
6	7
Parameter classification	
Parameter No.	
(L)	
Parameter value	
(H)	
(L)	
MIN value	
(H)	
(L)	
MAX value	
(H)	
Attribute L	
H	
Error code	
checksum	

Property

bit7	6	5	4	3	2	1	0
Unused parameter	Display prohibited		Change at initialization				

bit15	14	13	12	11	10	9	8
							Read only

Error code

bit7	6	5	4	3	2	1	0
0 : Normal 1 : Error		Command error	RS485 error	No.Error			

- Returns number error in case parameter classification and parameter number are out of range.
- 32bit code extended value will be returned for parameter MIN and MAX values.

command	mode
7	7

• Read multiple users' parameter attributes

Reception data

10h (16)	
axis	
7	7
(1) Parameter classification	
(1) Parameter No.	
(2) Parameter classification	
(2) Parameter No.	
≈	≈
(8)Parameter classification	
(8) Parameter No.	
checksum	

Transmission data

129 (81h)	
axis	
7	7
(1) Parameter classification	
(1) Parameter No.	
(L)	
(1) Parameter value	
(H)	
(L)	
(1) MIN value	
(H)	
(L)	
(1) MAX value	
(H)	
(1) Attribute (L)	
(H)	
≈	≈
(8) Parameter classification	
(8) Parameter No.	
⋮	
(8) Attribute (L)	
(H)	
Error code	
checksum	

Property

bit7	6	5	4	3	2	1	0
Unused parameter	Display prohibited		Change at initialize				

bit15	14	13	12	11	10	9	8
							Read only

Error code

bit7	6	5	4	3	2	1	0
0 : Normal 1 : Error		Command error	RS485 error	No.Error			

- Returns number error in case parameter classification and parameter number are out of range.
- 32bit code extended value will be returned for parameter MIN and MAX values.

command	mode
7	8

• Write multiple user parameters

Reception data

30h(48)
axis
8 | 7
(1) Parameter classification
(1) Parameter No.
(L)
(1) Parameter value
(H)
≈
(8) Parameter classification
(8) Parameter No.
(L)
(8) Parameter value
(H)
checksum

Transmission data

17(11h)
axis
8 | 7
(1) Parameter classification
(1) Parameter No.
(2) Parameter classification
(2) Parameter No.
≈
(8) Parameter classification
(8) Parameter No.
Error code
checksum

Error code

bit7	6	5	4	3	2	1	0
0 : Normal 1 : Error	Data Error	Command error	RS485 error	No.Error			

- Please make sure to set all unused parameters to 0 (zero). Failure to do this may result in data error. Data error will also occur when parameter values outside the set range is transmitted.
- Returns number error in case parameter classification and parameter number are out of range.

command	mode
9	0

• Read current alarm data

Reception data

0
axis
0 | 9
checksum

Transmission data

3
axis
0 | 9
Alarm No. (Main)
alarm No. (Sub)
Error code
checksum

Error code

bit7	6	5	4	3	2	1	0
0 : Normal 1 : Error		Command error	RS485 error				

- Alarm No. is 0 (zero) when no alarm is generated. Alarm No. refer to P.6-2 “Protective Function.

command	mode
9	2

• Read batch alarm history

Reception data

0	
axis	
2	9
checksum	

Transmission data

	29 (1Dh)	
	axis	
	2	9
Previous	Alarm No. (Main)	
	Alarm No. (Sub)	
Two times before	Alarm No. (Main)	
	Alarm No. (Sub)	
≈		≈
14 times before	Alarm No. (Main)	
	Alarm No. (Sub)	
	Error code	
	checksum	

Error code

bit7	6	5	4	3	2	1	0
0 : Normal 1 : Error		Command error	Command error				

- Reads alarm going back 14 times in the past.

command	mode
9	3

• Clear alarm history

Reception data

0	
axis	
3	9
checksum	

Transmission data

1	
axis	
3	9
Error code	
checksum	

Error code

bit7	6	5	4	3	2	1	0
0 : Normal 1 : Error	Data Error	Command error	RS485 error			Control LV	

- Clears alarm data history.
- Data error in case of clear failure.
- In case of control power supply LV, error code Control LV will be returned and write will not take place.

command	mode
9	4

• Alarm clear

Reception data

0	
axis	
4	9
checksum	

Transmission data

1	
axis	
4	9
Error code	
checksum	

Error code

bit7	6	5	4	3	2	1	0
0 : Normal 1 : Error		Command error	RS485 error				

- Clears currently activated alarm (only in case of alarms that can be cleared).
- Also clears absolute battery alarm.

command	mode
9	B

• Absolute encoder clear

Reception data

0	
axis	
B	9
checksum	

Transmission data

1	
axis	
B	9
Error code	
checksum	

Error code

bit7	6	5	4	3	2	1	0
0 : Normal 1 : Error		Command error	RS485 error				

- Clears absolute encoder error and multiple rotation data.
- Returns encoder error when absolute encoder is not in use.

5. BLOCK Motion

BLOCK Motion

SE	SF	SG
	○	○

The BLOCK motion is a positioning motion through the BLOCK program that combines the BLOCK command. Users can combine up to 256 BLOCK commands to create a positioning model.
In addition to relative positioning, absolute positioning, homing commands and other positioning commands, you can also use output signal operation, conditional branch and other commands.
By combining these functions, the output signal can be operated and the operation model can be changed easily according to the current position of the motor and the motor speed.
Users can choose to start the Block motion from the input signal of the Modbus communication or I/F connector.

Users can set the Block motion in one of the following ways (Block Parameter Settings).
・Set up the Block motion editor for the assistive software (PANATERM)
・Communications via Mosbus (Register)

For more information about the functions of Block motion, please refer to the following information on the official website of our company.
・SX-DSV03033: Technical Data (Modbus Communication Specifications Block Motion Features)
・MINAS A6 Series Block Motion Case

6. Motor Characteristics (S-T Characteristics)

MSMF series (50 W)

• Note that the motor characteristics may vary due to the existence of oil seal or brake.

Motor model	Unit	MSMF5AZ □ 1 □□	
Brake		without	with
Oil seal		without/with	
Output rating	W	50	
Matched drive		MADL □ 01 □□	
		MADL □ 05 □□	
Power supply of drive	V (AC)	100/200	
Rated torque	N•m	0.16	
Max.instantaneous speed	N•m	0.48	
Rated curren	A (rms)	1.1	
Max.instantaneous current	A (o-p)	4.7	
Rated rotational speed	r/min	3000	
Max.rotational speed	r/min	6000	
Rotor inertia	$\times 10^{-4}$ kg•m^2	0.026	0.029

MSMF series (50 W)

Without oil seal

●MSMF5AZ□1□□
Input voltage to driver: AC100 V/200 V

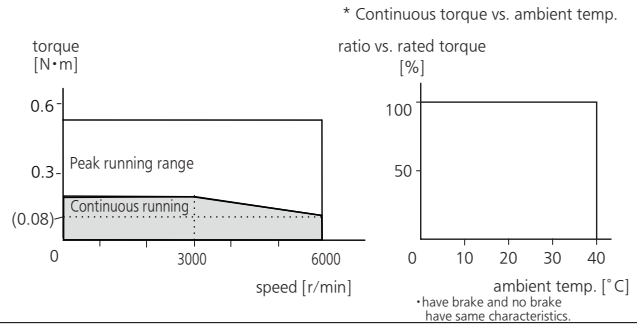

With oil seal

●MSMF5AZ□1□□
Input voltage to driver: AC100 V/200 V

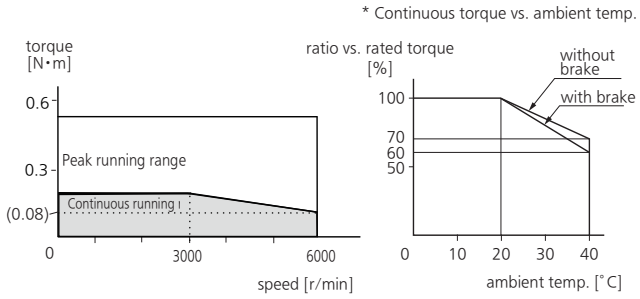

* These are subject to change. Contact us when you use these values for your machine design.

• When you lower the torque limit setup (Pr0.13 and 5.22), running range at high speed might be lowered as well.

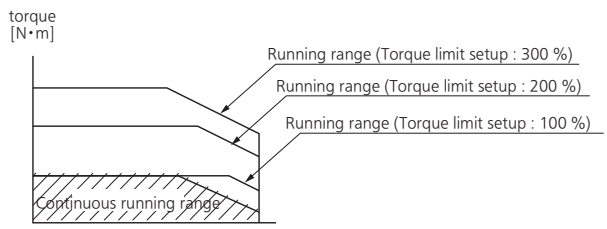

6. Motor Characteristics (S-T Characteristics)

MSMF series (100 W)

Motor model	Unit	MSMF011 □ 1 □□		MSMF012 □ 1 □□	
Brake		without	with	without	with
Oil seal		without/with		without/with	
Output rating	W	100		100	
Matched drive		MADL □ 11 □□		MADL □ 05 □□	
Power supply of drive	V (AC)	100		200	
Rated torque	N•m	0.32		0.32	
Max.instantaneous speed	N•m	0.95		0.95	
Rated curren	A (rms)	1.6		1.1	
Max.instantaneous current	A (o-p)	6.9		4.7	
Rated rotational speed	r/min	3000		3000	
Max.rotational speed	r/min	6000		6000	
Rotor inertia	$\times 10^{-4}$ kg•m^2	0.048	0.051	0.048	0.051

MSMF series (100 W)

Without oil seal

●MSMF011□1□□
Input voltage to driver: AC100 V
(Dotted line represents torque at 10 % less voltage.)

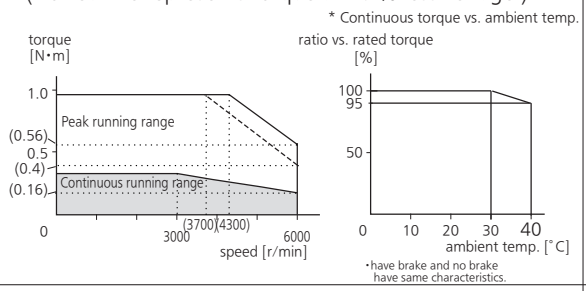

With oil seal

●MSMF011□1□□
Input voltage to driver: AC100 V
(Dotted line represents torque at 10 % less voltage.)

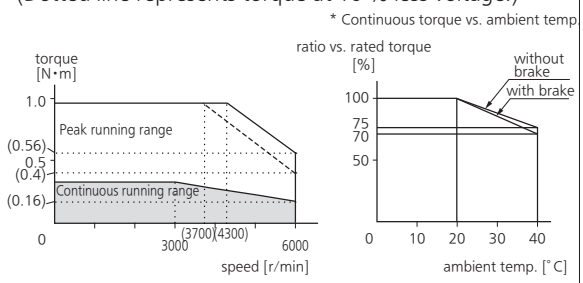

●MSMF012□1□□
Input voltage to driver: AC200 V
(Dotted line represents torque at 10 % less voltage.)

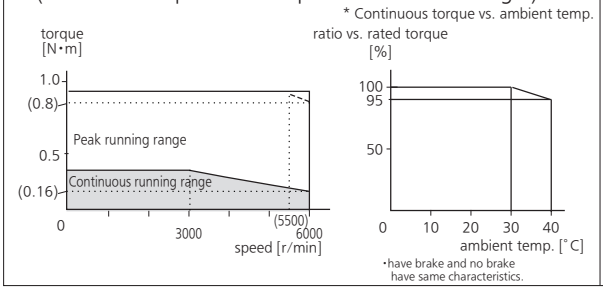

●MSMF012□1□□
Input voltage to driver: AC200 V
(Dotted line represents torque at 10 % less voltage.)

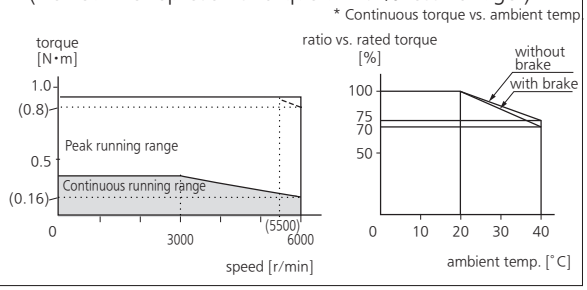

* These are subject to change. Contact us when you use these values for your machine design.

6. Motor Characteristics (S-T Characteristics)

MSMF series (200 W)

• Note that the motor characteristics may vary due to the existence of oil seal or brake.

Motor model	Unit	MSMF021 □ 1 □□		MSMF022 □ 1 □□	
Brake		without	with	without	with
Oil seal		without/with		without/with	
Output rating	W	200		200	
Matched drive		MBDL □ 21 □□		MADL □ 15 □□	
Power supply of drive	V (AC)	100		200	
Rated torque	N•m	0.64		0.64	
Max.instantaneous speed	N•m	1.91		1.91	
Rated curren	A (rms)	2.5		1.5	
Max.instantaneous current	A (o-p)	10.6		6.5	
Rated rotational speed	r/min	3000		3000	
Max.rotational speed	r/min	6000		6000	
Rotor inertia	$\times 10^{-4}$ kg•m^2	0.14	0.17	0.14	0.17

MSMF series (200 W)

Without oil seal

●MSMF021□1□□

Input voltage to driver: AC100 V
(Dotted line represents torque at 10 % less voltage.)

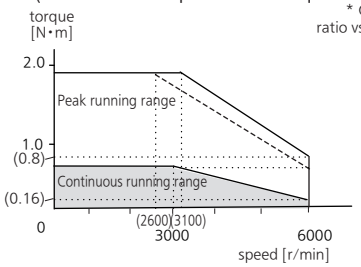

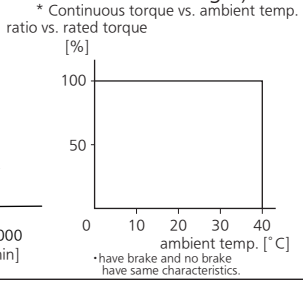

With oil seal

●MSMF021□1□□

Input voltage to driver: AC200 V
(Dotted line represents torque at 10 % less voltage.)

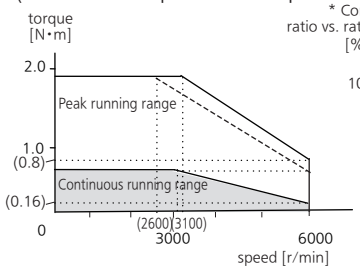

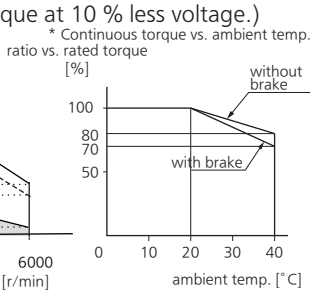

●MSMF022□1□□

Input voltage to driver: AC200 V
(Dotted line represents torque at 10 % less voltage.)

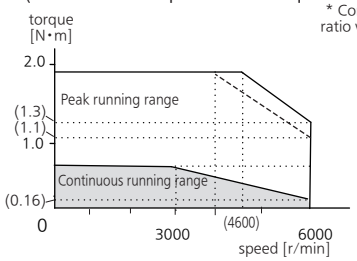

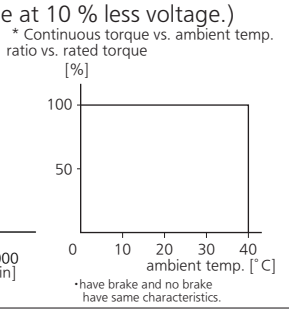

●MSMF022□1□□

Input voltage to driver: AC200 V
(Dotted line represents torque at 10 % less voltage.)

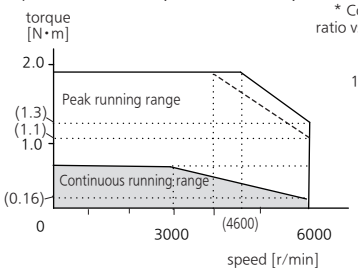

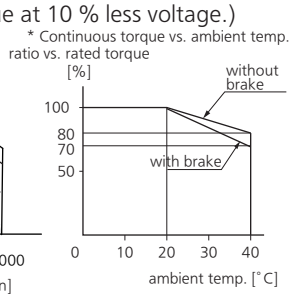

* These are subject to change. Contact us when you use these values for your machine design.

6. Motor Characteristics (S-T Characteristics)

MSMF series (400 W)

• Note that the motor characteristics may vary due to the existence of oil seal or brake.

Motor model	Unit	MSMF041 □ 1 □□		MSMF042 □ 1 □□	
Brake		without	with	without	with
Oil seal		without/with		without/with	
Output rating	W	400		400	
Matched drive		MCDL □ 31 □□		MBDL □ 25 □□	
Power supply of drive	V (AC)	100		200	
Rated torque	N•m	1.27		1.27	
Max.instantaneous speed	N•m	3.82		3.82	
Rated curren	A (rms)	4.6		2.4	
Max.instantaneous current	A (o-p)	19.5		10.2	
Rated rotational speed	r/min	3000		3000	
Max.rotational speed	r/min	6000		6000	
Rotor inertia	× 10^{-4} kg•m²	0.27	0.30	0.27	0.30

MSMF series (400 W)

Without oil seal	With oil seal

●MSMF041□1□□

Input voltage to driver: AC200 V
(Dotted line represents torque at 10 % less voltage.)

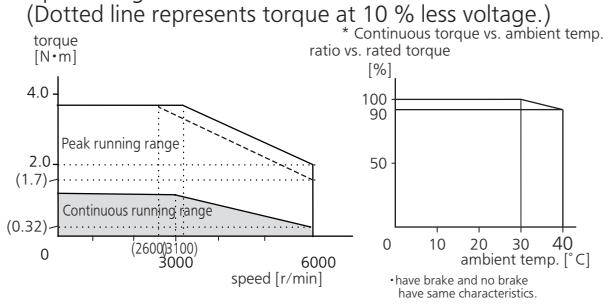

●MSMF041□1□□

Input voltage to driver: AC200 V
(Dotted line represents torque at 10 % less voltage.)

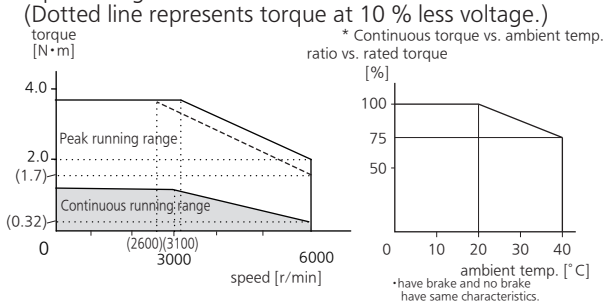

●MSMF042□1□□

Input voltage to driver: AC200 V
(Dotted line represents torque at 10 % less voltage.)

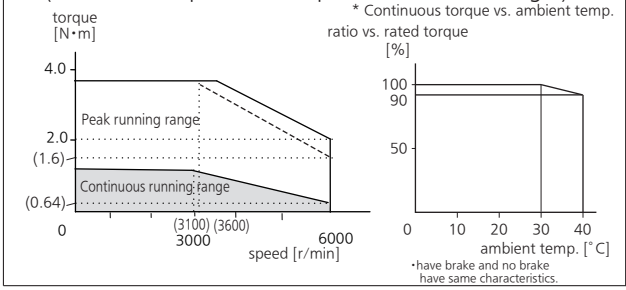

●MSMF042□1□□

Input voltage to driver: AC200 V
(Dotted line represents torque at 10 % less voltage.)

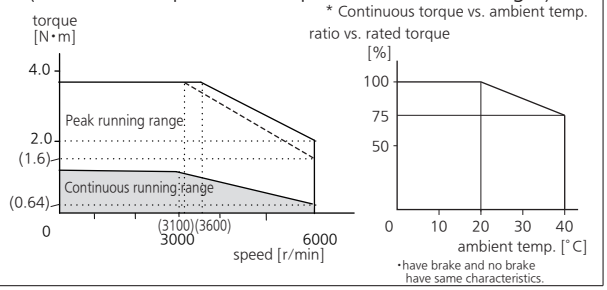

* These are subject to change. Contact us when you use these values for your machine design.

6. Motor Characteristics (S-T Characteristics)

MSMF series (750 W to 1.0 kW(□80))

• Note that the motor characteristics may vary due to the existence of oil seal or brake.

Motor model	Unit	MSMF082 □ 1 □□		MSMF092 □ 1 □□	
Brake		without	with	without	with
Oil seal		without/with		without/with	
Output rating	W	750		1000	
Matched drive		MCDL □ 35 □□		MDDL □ 45 □□	
Power supply of drive	V (AC)	200		200	
Rated torque	N•m	2.39		3.18	
Max.instantaneous speed	N•m	7.16		9.55	
Rated curren	A (rms)	4.1		5.7	
Max.instantaneous current	A (o-p)	17.4		24.2	
Rated rotational speed	r/min	3000		3000	
Max.rotational speed	r/min	6000		6000	
Rotor inertia	$\times 10^{-4}$ kg•m^2	0.96	1.06	1.26	1.36

MSMF series (750 W to 1.0 kW(□80))

Without oil seal	With oil seal
●MSMF082□1□□ Input voltage to driver: AC200 V (Dotted line represents torque at 10 % less voltage.) 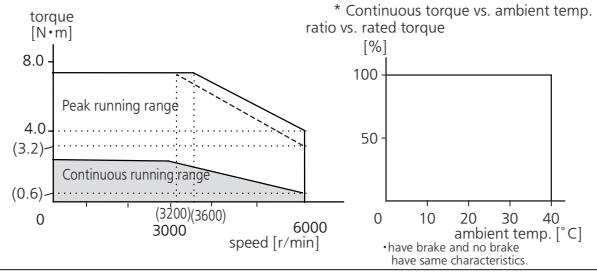	●MSMF082□1□□ Input voltage to driver: AC200 V (Dotted line represents torque at 10 % less voltage.) 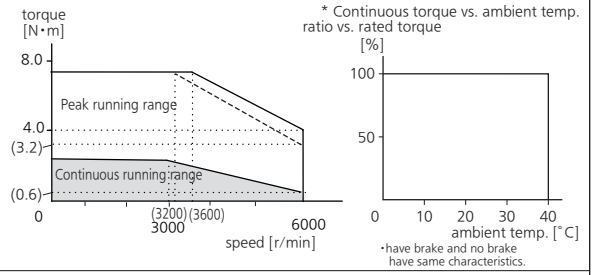
●MSMF092□1□□ Input voltage to driver: AC200 V (Dotted line represents torque at 10 % less voltage.) 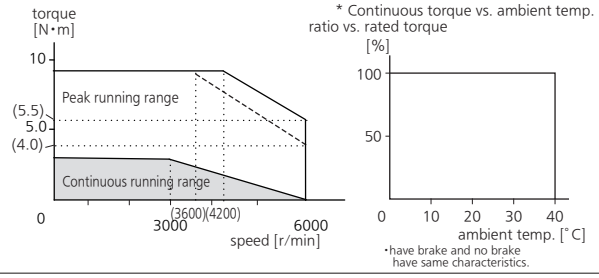	●MSMF092□1□□ Input voltage to driver: AC200 V (Dotted line represents torque at 10 % less voltage.) 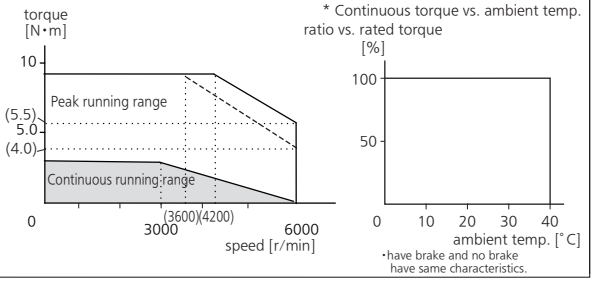

* These are subject to change. Contact us when you use these values for your machine design.

6. Motor Characteristics (S-T Characteristics)

MSMF series (1.0 kW (□ 100) to 2.0 kW)

• Note that the motor characteristics may vary due to the existence of oil seal or brake.

Motor model	Unit	MSMF102 □ 1 □□		MSMF152 □ 1 □□		MSMF202 □ 1 □□	
Brake		without	with	without	with	without	with
Oil seal		with		with		with	
Output rating	kW	1.0		1.5		2.0	
Matched drive		MDDL □ 55 □□		MDDL □ 55 □□		MEDL □ 83 □□	
Power supply of drive	V (AC)	200		200		200	
Rated torque	N•m	3.18		4.77		6.37	
Max.instantaneous speed	N•m	9.55		14.3		19.1	
Rated curren	A (rms)	6.6		8.2		11.3	
Max.instantaneous current	A (o-p)	28		35		48	
Rated rotational speed	r/min	3000		3000		3000	
Max.rotational speed	r/min	5000		5000		5000	
Rotor inertia	$\times 10^{-4}$ kg•m^2	2.15	2.47	3.10	3.45	4.06	4.41

MSMF series (1.0 kW(□100) to 2.0 kW)

With oil seal

●MSMF102 □1□□
Input voltage to driver: AC200 V
(Dotted line represents torque at 10 % less voltage.)

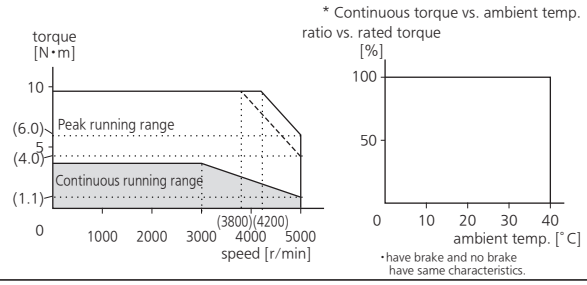

●MSMF152 □1□□
Input voltage to driver: AC200 V
(Dotted line represents torque at 10 % less voltage.)

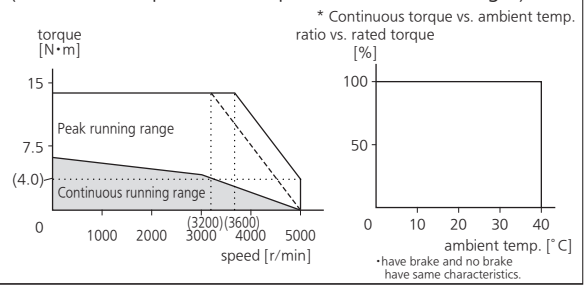

●MSMF202 □1□□
Input voltage to driver: AC200 V
(Dotted line represents torque at 10 % less voltage.)

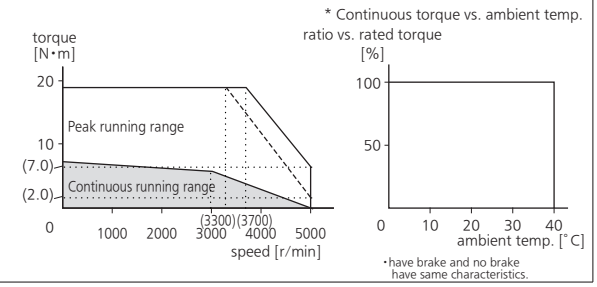

* These are subject to change. Contact us when you use these values for your machine design.

6. Motor Characteristics (S-T Characteristics)

MSMF series (3.0 kW to 5.0 kW)

• Note that the motor characteristics may vary due to the existence of oil seal or brake.

Motor model	Unit	MSMF302 □ 1 □□		MSMF402 □ 1 □□		MSMF502 □ 1 □□	
Brake		without	with	without	with	without	with
Oil seal		with		with		with	
Output rating	kW	3.0		4.0		5.0	
Matched drive		MFDL □ A3 □□		MFDL □ B3 □□		MFDL □ B3 □□	
Power supply of drive	V (AC)	200		200		200	
Rated torque	N•m	9.55		12.7		15.9	
Max.instantaneous speed	N•m	28.6		38.2		47.7	
Rated curren	A (rms)	18.1		19.6		24	
Max.instantaneous current	A (o-p)	77		83		102	
Rated rotational speed	r/min	3000		3000		3000	
Max.rotational speed	r/min	5000		4500		4500	
Rotor inertia	$\times 10^{-4}$ kg•m^2	7.04	7.38	14.4	15.6	19.0	20.2

MSMF series (3.0 kW to 5.0 kW)

With oil seal

●MSMF302□1□□

Input voltage to driver: AC200 V
(Dotted line represents torque at 10 % less voltage.)

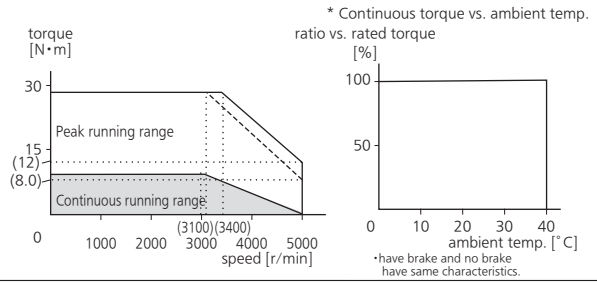

●MSMF402□1□□

Input voltage to driver: AC200 V
(Dotted line represents torque at 10 % less voltage.)

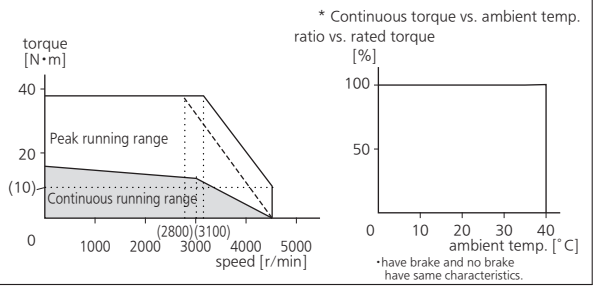

●MSMF502□1□□

Input voltage to driver: AC200 V
(Dotted line represents torque at 10 % less voltage.)

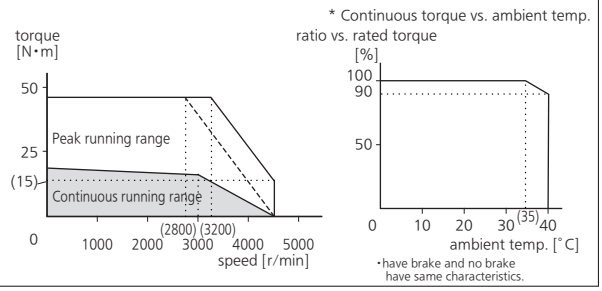

* These are subject to change. Contact us when you use these values for your machine design.

6. Motor Characteristics (S-T Characteristics)

MQMF series (100 W)

• Note that the motor characteristics may vary due to the existence of oil seal or brake.

Motor model	Unit	MQMF011 □ 1 □□		MQMF012 □ 1 □□	
Brake		without	with	without	with
Oil seal		without/with		without/with	
Output rating	W	100		100	
Matched drive		MADL □ 11 □□		MADL □ 05 □□	
Power supply of drive	V (AC)	100		200	
Rated torque	N•m	0.32		0.32	
Max.instantaneous speed	N•m	1.11		1.11	
Rated curren	A (rms)	1.6		1.1	
Max.instantaneous current	A (o-p)	7.9		5.5	
Rated rotational speed	r/min	3000		3000	
Max.rotational speed	r/min	6500		6500	
Rotor inertia	$\times 10^{-4}$ kg•m^2	0.15	0.18	0.15	0.18

MQMF series (100 W)

Without oil seal

●MQMF011□1□□
Input voltage to driver: AC100 V
(Dotted line represents torque at 10 % less voltage.)

* Continuous torque vs. ambient temp.

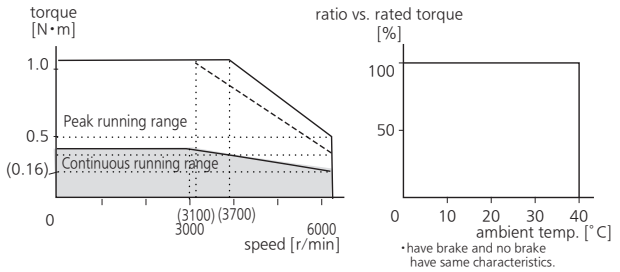

●MQMF012□1□□
Input voltage to driver: AC200 V
(Dotted line represents torque at 10 % less voltage.)

* Continuous torque vs. ambient temp.

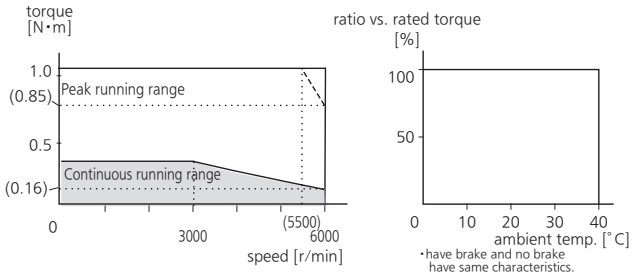

With oil seal

●MQMF011□1□□
Input voltage to driver: AC100 V
(Dotted line represents torque at 10 % less voltage.)

* Continuous torque vs. ambient temp.

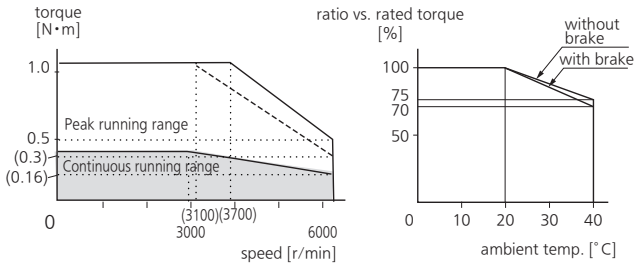

●MQMF012□1□□
Input voltage to driver: AC200 V
(Dotted line represents torque at 10 % less voltage.)

* Continuous torque vs. ambient temp.

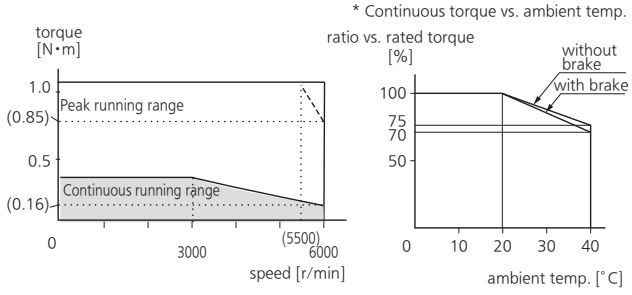

* These are subject to change. Contact us when you use these values for your machine design.

6. Motor Characteristics (S-T Characteristics)

MQMF series (200 W)

• Note that the motor characteristics may vary due to the existence of oil seal or brake.

Motor model	Unit	MQMF021L1 □□		MQMF022L1 □□	
Brake		without	with	without	with
Oil seal		without/with		without/with	
Output rating	W	200		200	
Matched drive		MBDL □ 21 □□		MADL □ 15 □□	
Power supply of drive	V (AC)	100		200	
Rated torque	N•m	0.64		0.64	
Max.instantaneous speed	N•m	2.23		2.23	
Rated curren	A (rms)	2.1		1.4	
Max.instantaneous current	A (o-p)	10.4		6.9	
Rated rotational speed	r/min	3000		3000	
Max.rotational speed	r/min	6500		6500	
Rotor inertia	× 10^{-4} kg•m^2	0.50	0.59	0.50	0.59

MQMF series(200 W)

Without oil seal

●MQMF021L1□□

Input voltage to driver: AC100 V
(Dotted line represents torque at 10 % less voltage.)

* Continuous torque vs. ambient temp.

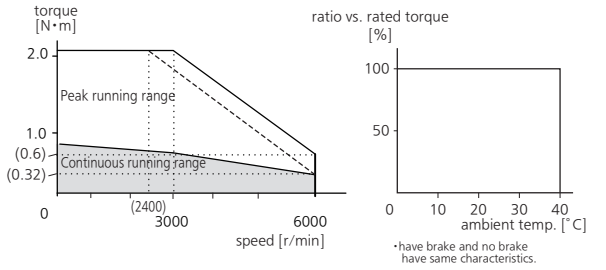

●MQMF022L1□□

Input voltage to driver: AC200 V
(Dotted line represents torque at 10 % less voltage.)

* Continuous torque vs. ambient temp.

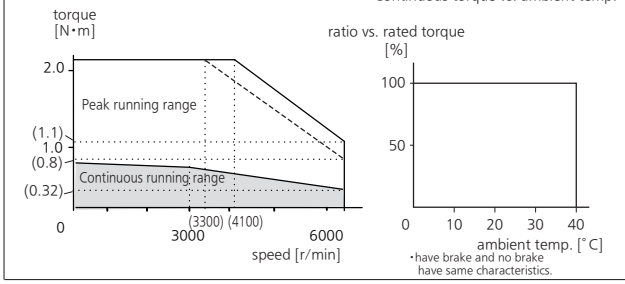

With oil seal

●MQMF021L1□□

Input voltage to driver: AC100 V
(Dotted line represents torque at 10 % less voltage.)

* Continuous torque vs. ambient temp.

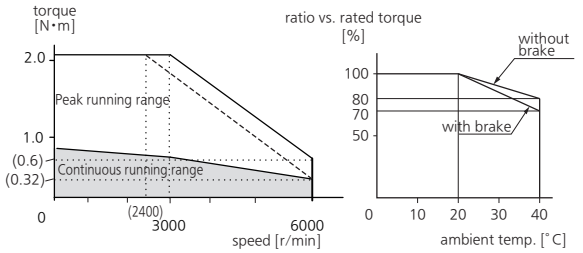

●MQMF022L1□□

Input voltage to driver: AC200 V
(Dotted line represents torque at 10 % less voltage.)

* Continuous torque vs. ambient temp.

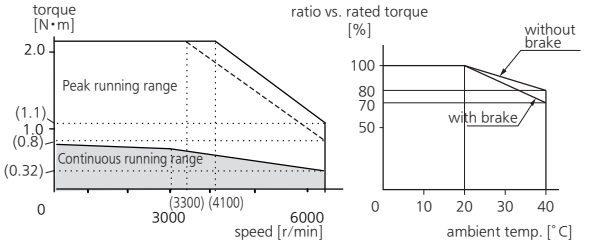

* These are subject to change. Contact us when you use these values for your machine design.

6. Motor Characteristics (S-T Characteristics)

MQMF series (400 W)

• Note that the motor characteristics may vary due to the existence of oil seal or brake.

Motor model	Unit	MQMF041 □ 1 □□		MQMF042 □ 1 □□	
Brake		without	with	without	with
Oil seal		without/with		without/with	
Output rating	W	400		400	
Matched drive		MCDL □ 31 □□		MBDL □ 25 □□	
Power supply of drive	V (AC)	100		200	
Rated torque	N•m	1.27		1.27	
Max.instantaneous speed	N•m	4.46		4.46	
Rated curren	A (rms)	4.1		2.1	
Max.instantaneous current	A (o-p)	20.3		10.4	
Rated rotational speed	r/min	3000		3000	
Max.rotational speed	r/min	6500		6500	
Rotor inertia	$\times 10^{-4}$ kg•m^2	0.98	1.06	0.98	1.06

MQMF series (400 W)

Without oil seal

●MQMF041□1□□

Input voltage to driver: AC200 V
(Dotted line represents torque at 10 % less voltage.)

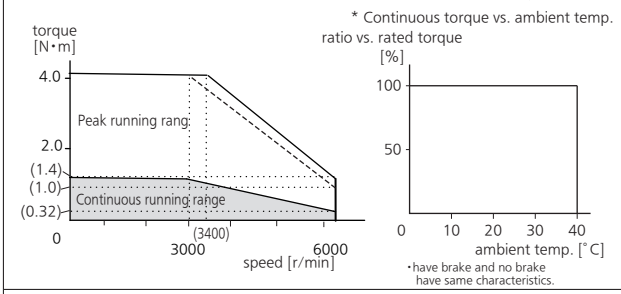

With oil seal

●MQMF041□1□□

Input voltage to driver: AC200 V
(Dotted line represents torque at 10 % less voltage.)

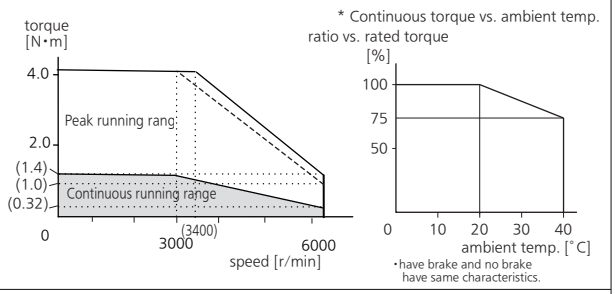

●MQMF042□1□□

Input voltage to driver: AC200 V
(Dotted line represents torque at 10 % less voltage.)

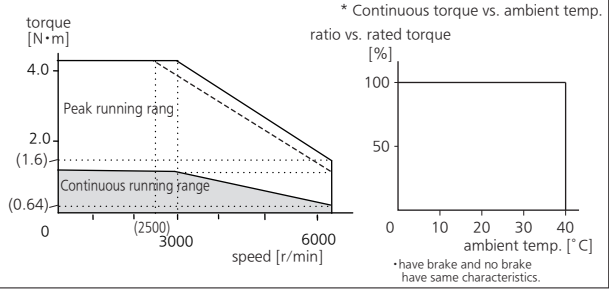

●MQMF042□1□□

Input voltage to driver: AC200 V
(Dotted line represents torque at 10 % less voltage.)

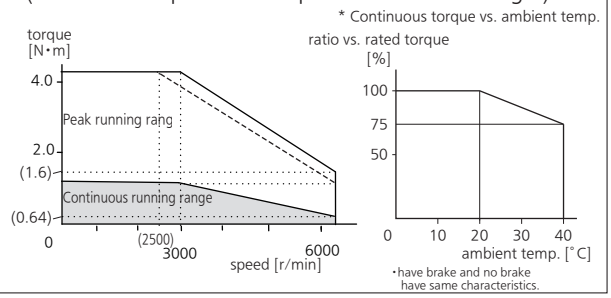

* These are subject to change. Contact us when you use these values for your machine design.

6. Motor Characteristics (S-T Characteristics)

MDMF series (1.0 kW to 2.0 kW)

• Note that the motor characteristics may vary due to the existence of oil seal or brake.

Motor model	Unit	MDMF102 □ 1 □□		MDMF152 □ 1 □□		MDMF202 □ 1 □□	
Brake		without	with	without	with	without	with
Oil seal		with		with		with	
Output rating	kW	1.0		1.5		2.0	
Matched drive		MDDL □ 45 □□		MDDL □ 55 □□		MEDL □ 83 □□	
Power supply of drive	V (AC)	200		200		200	
Rated torque	N•m	4.77		7.16		9.55	
Max.instantaneous speed	N•m	14.3		21.5		28.6	
Rated curren	A (rms)	5.2		8.0		9.9	
Max.instantaneous current	A (o-p)	22		34		42	
Rated rotational speed	r/min	2000		2000		2000	
Max.rotational speed	r/min	3000		3000		3000	
Rotor inertia	$\times 10^{-4}$ kg•m^2	6.18	7.40	9.16	10.4	12.1	13.3

MDMF series (1.0 kW to 2.0 kW)

With oil seal

●MDMF102□1□□

Input voltage to driver: AC200 V

(Dotted line represents torque at 10 % less voltage.)

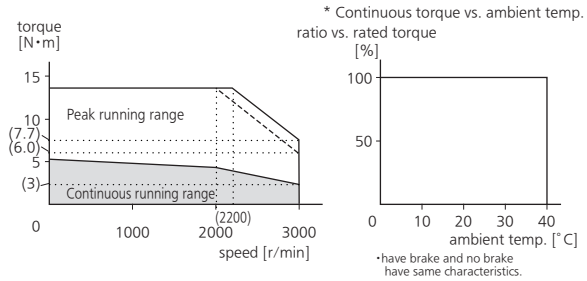

●MDMF152□1□□

Input voltage to driver: AC200 V

(Dotted line represents torque at 10 % less voltage.)

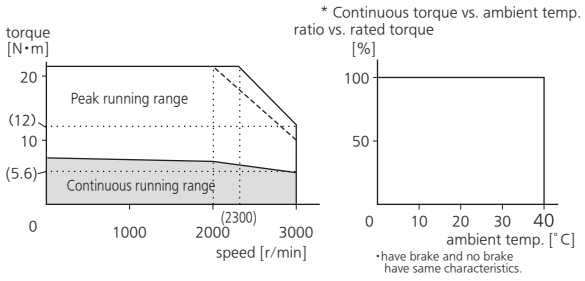

●MDME202□1□□

Input voltage to driver: AC200 V

(Dotted line represents torque at 10 % less voltage.)

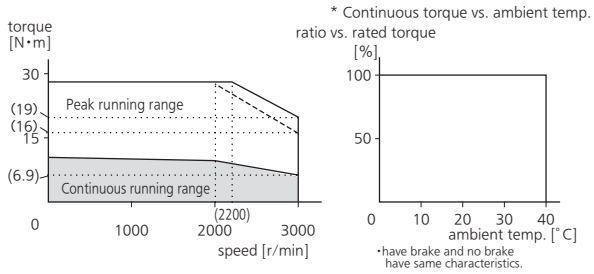

* These are subject to change. Contact us when you use these values for your machine design.

6. Motor Characteristics (S-T Characteristics)

MDMF series (3.0 kW to 5.0 kW)

• Note that the motor characteristics may vary due to the existence of oil seal or brake.

Motor model	Unit	MDMF302 □ 1 □□		MDMF402 □ 1 □□		MDMF502 □ 1 □□	
Brake		without	with	without	with	without	with
Oil seal		with		with		with	
Output rating	kW	3.0		4.0		5.0	
Matched drive		MFDL □ A3 □□		MFDL □ B3 □□		MFDL □ B3 □□	
Power supply of drive	V (AC)	200		200		200	
Rated torque	N•m	14.3		19.1		23.9	
Max.instantaneous speed	N•m	43.0		57.3		71.6	
Rated curren	A (rms)	16.4		20.0		23.3	
Max.instantaneous current	A (o-p)	70		85		99	
Rated rotational speed	r/min	2000		2000		2000	
Max.rotational speed	r/min	3000		3000		3000	
Rotor inertia	$\times 10^{-4}$ kg•m^2	18.6	19.6	46.9	52.3	58.2	63.0

MDMF series (3.0 kW to 5.0 kW)

With oil seal

●MDMF302□1□□

Input voltage to driver: AC200 V
(Dotted line represents torque at 10 % less voltage.)

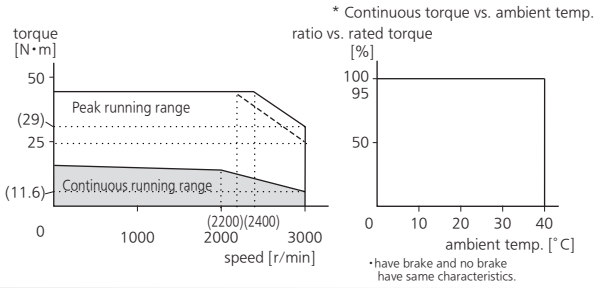

●MDMF402□1□□

Input voltage to driver: AC200 V
(Dotted line represents torque at 10 % less voltage.)

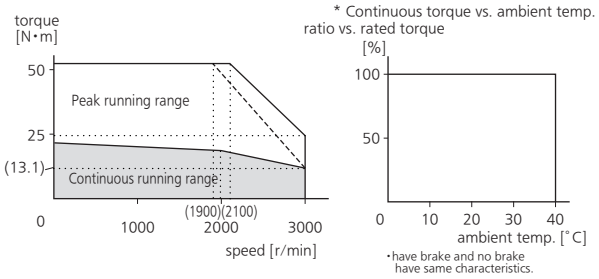

●MDMF502□1□□

Input voltage to driver: AC200 V
(Dotted line represents torque at 10 % less voltage.)

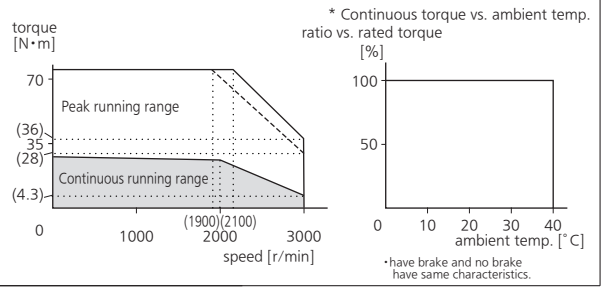

* These are subject to change. Contact us when you use these values for your machine design.

6.Motor Characteristics (S-T Characteristics)

MDMF series (7.5 kW to 22.0 kW)

• Note that the motor characteristics may vary due to the existence of oil seal or brake.

Motor model	Unit	MDMF752 □ 1 □□		MDMFC12 □ 1 □□		MDMFC52 □ 1 □□		MDMFD22L1 □□	
Brake		without	with	without	with	without	with	without	with
Oil seal		with		with		with		with	
Rated output	kW	7.5		11.0		15.0		22.0	
Matched driver		MGDL □ C3 □□		MHDL □ E3 □□		MHDL □ E3 □□		MHDL □ F3 □□	
Power supply of drive	V (AC)	200		200		200		200	
Rated torque	N•m	47.8		70.0		95.5		140	
Max. instantaneous torque	N•m	125		175		224		350	
Rated current	A (rms)	40.2		57.1		65.8		80.9	
Max. instantaneous current	A (o-p)	154		209		225		294	
Rated rotational speed	r/min	1500		1500		1500		1500	
Max. rotational speed	r/min	3000		2000		2000		2000	
Rotor inertia	$\times 10^{-4}$ kg•m^2	122	127	205	214	280	289	431	455

MDMF series (7.5 kW to 22.0 kW)

With oil seal

●MDMF752□1□□

Input voltage to driver: AC200 V
(Dotted line represents torque at 10 % less voltage.)

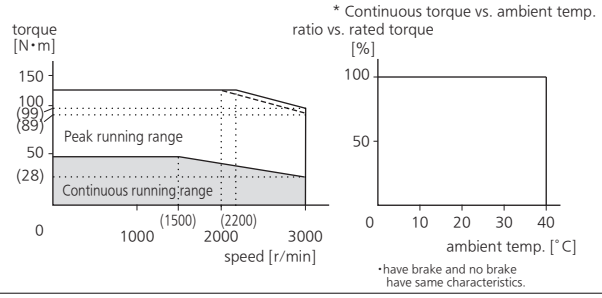

●MDMFC12□1□□

Input voltage to driver: AC200 V
(Dotted line represents torque at 10 % less voltage.)

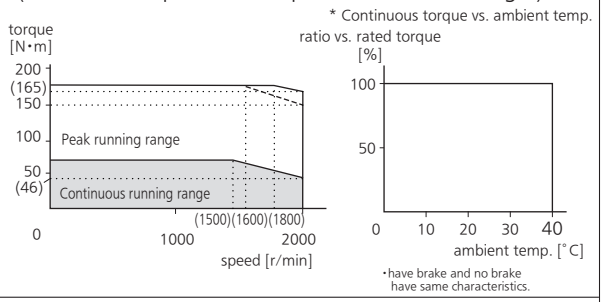

●MDMFC52□1□□

Input voltage to driver: AC200 V
(Dotted line represents torque at 10 % less voltage.)

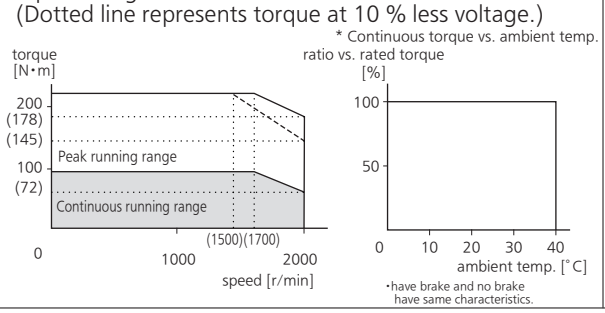

●MDMFD22L1□□

Input voltage to driver: AC200 V
(Dotted line represents torque at 10 % less voltage.)

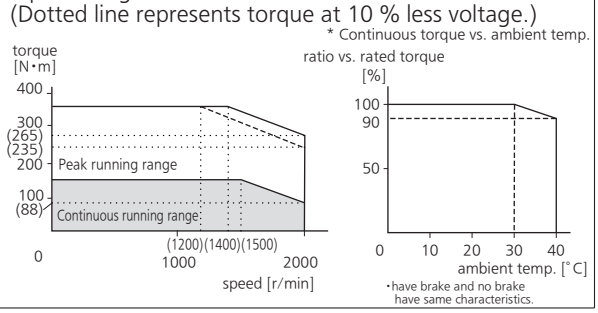

* These are subject to change. Contact us when you use these values for your machine design.

6. Motor Characteristics (S-T Characteristics)

MGMF series (0.85 kW to 1.8 kW)

• Note that the motor characteristics may vary due to the existence of oil seal or brake.

Motor model	Unit	MGMF092 □ 1 □□		MGMF132 □ 1 □□		MGMF182 □ 1 □□	
Brake		without	with	without	with	without	with
Oil seal		with		with		with	
Output rating	kW	0.85		1.3		1.8	
Matched drive		MDDL □ 45 □□		MDDL □ 55 □□		MEDL □ 83 □□	
Power supply of drive	V (AC)	200		200		200	
Rated torque	N•m	5.41		8.28		11.5	
Max.instantaneous speed	N•m	14.3		23.3		28.7	
Rated curren	A (rms)	5.9		9.3		11.8	
Max.instantaneous current	A (o-p)	22		37		42	
Rated rotational speed	r/min	1500		1500		1500	
Max.rotational speed	r/min	3000		3000		3000	
Rotor inertia	$\times 10^{-4}$ kg•m^2	6.18	7.40	9.16	10.4	12.1	13.3

MGMF series (850 W to 1.8 kW)

With oil seal

●MGMF092□1□□
Input voltage to driver: AC200 V
(Dotted line represents torque at 10 % less voltage.)

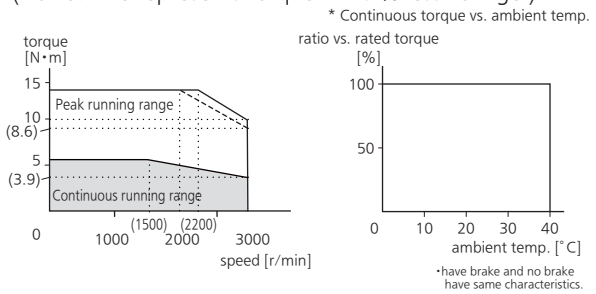

●MGMF132□1□□
Input voltage to driver: AC200 V
(Dotted line represents torque at 10 % less voltage.)

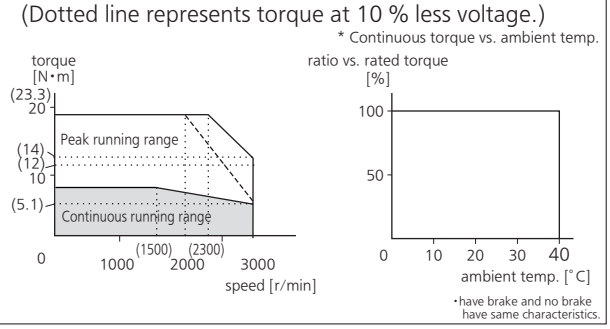

●MGMF182□1□□
Input voltage to driver: AC200 V
(Dotted line represents torque at 10 % less voltage.)

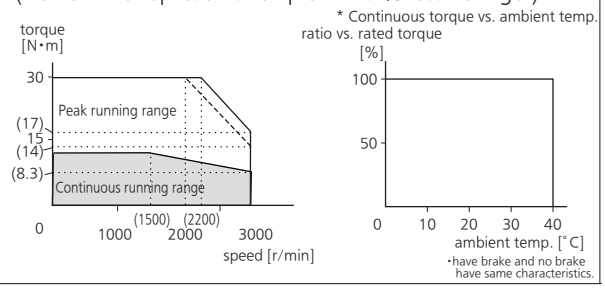

* These are subject to change. Contact us when you use these values for your machine design.

6. Motor Characteristics (S-T Characteristics)

MGMF series (2.4 kW to 5.5 kW)

• Note that the motor characteristics may vary due to the existence of oil seal or brake.

Motor model	Unit	MGMF242 □ 1 □□		MGMF292 □ 1 □□		MGMF442 □ 1 □□		MGMF552L1 □□	
Brake		without	with	without	with	without	with	without	with
Oil seal		with		with		with		with	
Output rating	kW	2.4		2.9		4.4		5.5	
Matched drive		MEDL □ 93 □□		MFDL □ B3 □□		MFDL □ B3 □□		MGDL □ C3 □□	
Power supply of drive	V (AC)	200		200		200		200	
Rated torque	N•m	15.3		18.5		28.0		35.0	
Max.instantaneous speed	N•m	45.3		45.2		70.0		102.0	
Rated curren	A (rms)	16.0		19.3		27.2		39.8	
Max.instantaneous current	A (o-p)	66.5		67		96		164	
Rated rotational speed	r/min	1500		1500		1500		1500	
Max.rotational speed	r/min	3000		3000		3000		3000	
Rotor inertia	$\times 10^{-4}$ kg•m^2	46.9	52.3	46.9	52.3	58.2	63.0	83.0	88.0

MGMF series (2.4 kW to 5.5 kW)

With oil seal

●MGMF242□1□□

Input voltage to driver: AC200 V
(Dotted line represents torque at 10 % less voltage.)

* Continuous torque vs. ambient temp.

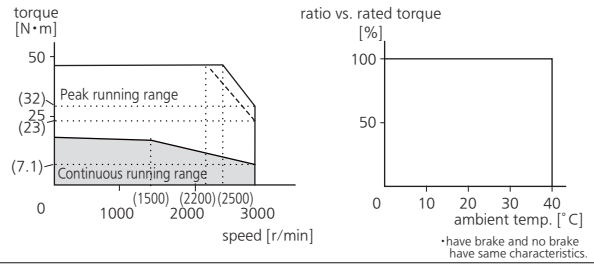

●MGMF292□1□□

Input voltage to driver: AC200 V
(Dotted line represents torque at 10 % less voltage.)

* Continuous torque vs. ambient temp.

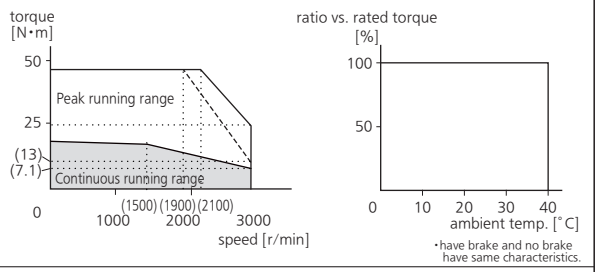

●MGMF442□1□□

Input voltage to driver: AC200 V
(Dotted line represents torque at 10 % less voltage.)

* Continuous torque vs. ambient temp.

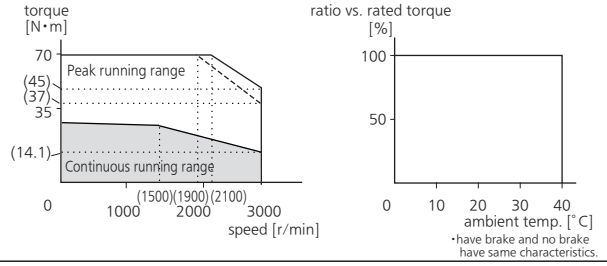

●MGMF552L1□□

Input voltage to driver : AC200 V
(Dotted line represents torque at 10 % less voltage.)

* Continuous torque vs. ambient temp.

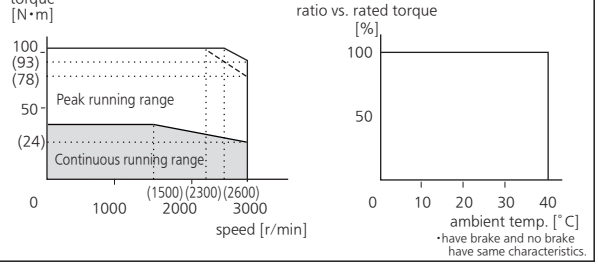

* These are subject to change. Contact us when you use these values for your machine design.

6. Motor Characteristics (S-T Characteristics)

MHMF series (50 W)

• Note that the motor characteristics may vary due to the existence of oil seal or brake.

Motor model	Unit	MHMF5AZ □ 1 □□	
Brake		without	with
Oil seal		without/with	
Output rating	W	50	
Matched drive		MADL □ 01 □□	
		MADL □ 05 □□	
Power supply of drive	V (AC)	100/200	
Rated torque	N•m	0.16	
Max.instantaneous speed	N•m	0.56	
Rated curren	A (rms)	1.1	
Max.instantaneous current	A (o-p)	5.5	
Rated rotational speed	r/min	3000	
Max.rotational speed	r/min	6500	
Rotor inertia	$\times 10^{-4}$ kg•m^2	0.038	0.042

MHMF series (50 W)

Without oil seal	With oil seal
●MHMF5AZ□1□□ Input voltage to driver: AC100 V/200 V * Continuous torque vs. ambient temp.	●MHMF5AZ□1□□ Input voltage to driver: AC100 V/200 V * Continuous torque vs. ambient temp.

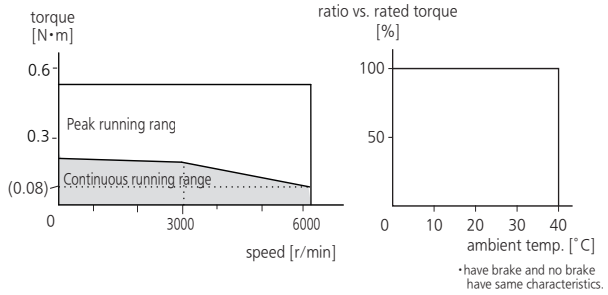

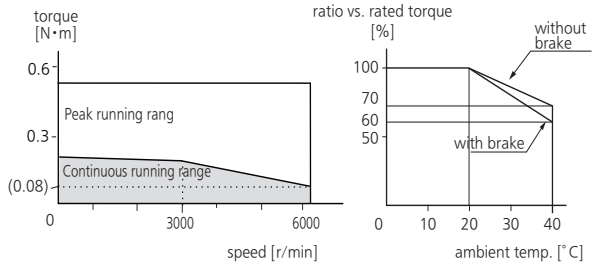

* These are subject to change. Contact us when you use these values for your machine design.

• When you lower the torque limit setup (Pr0.13 and 5.22), running range at high speed might be lowered as well.

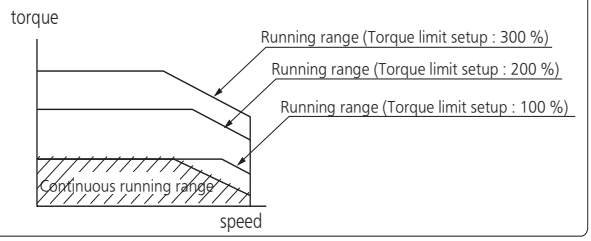

6. Motor Characteristics (S-T Characteristics)

MHMF series (100 W)

• Note that the motor characteristics may vary due to the existence of oil seal or brake.

Motor model	Unit	MHMF011 □ 1 □□		MHMF012 □ 1 □□	
Brake		without	with	without	with
Oil seal		without/with		without/with	
Output rating	W	100		100	
Matched drive		MADL □ 11 □□		MADL □ 05 □□	
Power supply of drive	V (AC)	100		200	
Rated torque	N•m	0.32		0.32	
Max.instantaneous speed	N•m	1.11		1.11	
Rated curren	A (rms)	1.6		1.1	
Max.instantaneous current	A (o-p)	7.9		5.5	
Rated rotational speed	r/min	3000		3000	
Max.rotational speed	r/min	6500		6500	
Rotor inertia	$\times 10^{-4}$ kg•m^2	0.071	0.074	0.071	0.074

MHMF series (100 W)

Without oil seal

●MHMF011□1□□

Input voltage to driver: AC100 V/200 V

* Continuous torque vs. ambient temp.

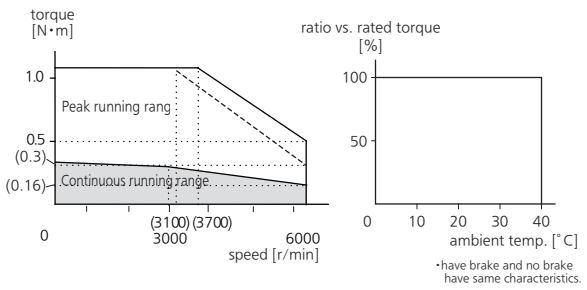

●MHMF012□1□□

Input voltage to driver: AC200 V
(Dotted line represents torque at 10 % less voltage.)

* Continuous torque vs. ambient temp.

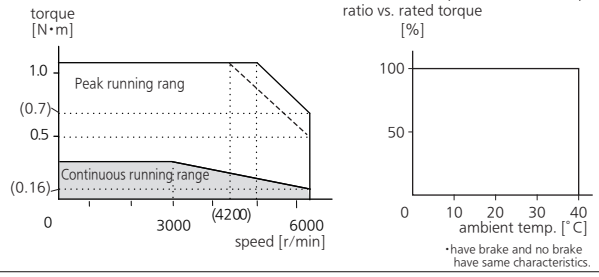

With oil seal

●MHMF011□1□□

Input voltage to driver: AC100 V/200 V

* Continuous torque vs. ambient temp.

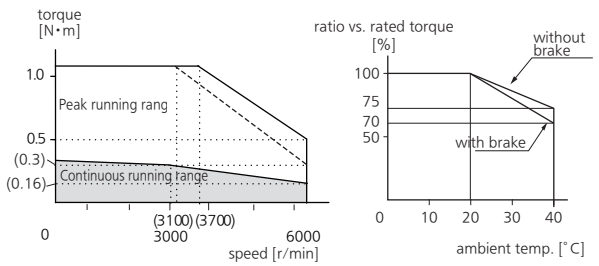

●MHMF012□1□□

Input voltage to driver: AC200 V
(Dotted line represents torque at 10 % less voltage.)

* Continuous torque vs. ambient temp.

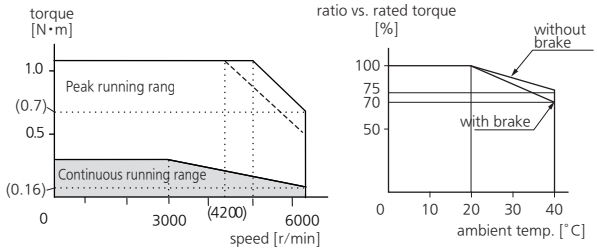

* These are subject to change. Contact us when you use these values for your machine design.

6. Motor Characteristics (S-T Characteristics)

MHMF series (200 W)

• Note that the motor characteristics may vary due to the existence of oil seal or brake.

Motor model	Unit	MHMF021 □ 1 □□		MHMF022 □ 1 □□	
Brake		without	with	without	with
Oil seal		without/with		without/with	
Output rating	W	200		200	
Matched drive		MBDL □ 21 □□		MADL □ 15 □□	
Power supply of drive	V (AC)	100		200	
Rated torque	N•m	0.64		0.64	
Max.instantaneous speed	N•m	2.23		2.23	
Rated curren	A (rms)	2.1		1.4	
Max.instantaneous current	A (o-p)	10.4		6.9	
Rated rotational speed	r/min	3000		3000	
Max.rotational speed	r/min	6500		6500	
Rotor inertia	$\times 10^{-4}$ kg•m^2	0.29	0.31	0.29	0.31

MHMF series (200 W)

Without oil seal

●MHMF021□1□□
Input voltage to driver: AC100 V
(Dotted line represents torque at 10 % less voltage.)

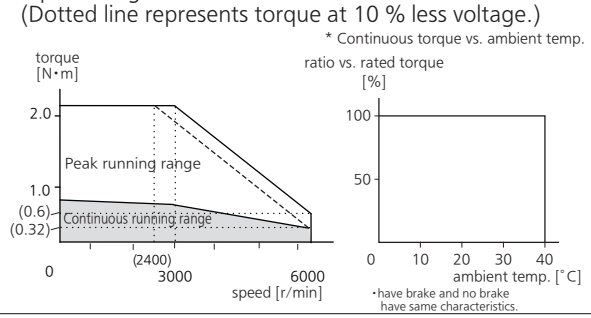

With oil seal

●MHMF021□1□□
Input voltage to driver: AC200 V
(Dotted line represents torque at 10 % less voltage.)

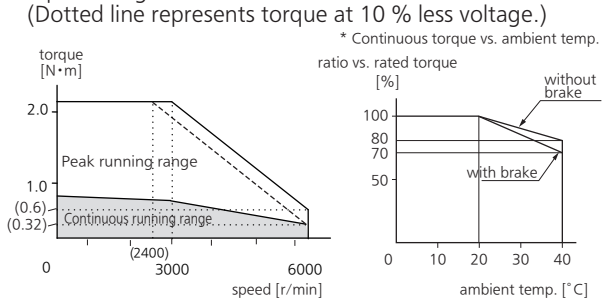

●MHMF022□1□□
Input voltage to driver: AC200 V
(Dotted line represents torque at 10 % less voltage.)

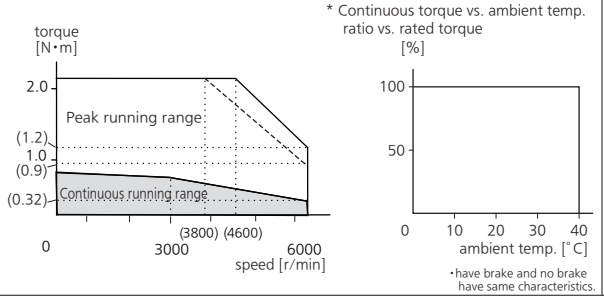

●MHMF022□1□□
Input voltage to driver: AC200 V
(Dotted line represents torque at 10 % less voltage.)

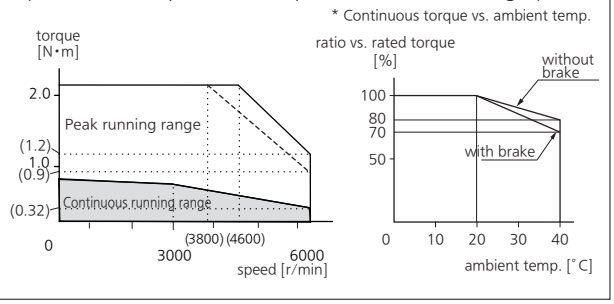

* These are subject to change. Contact us when you use these values for your machine design.

6. Motor Characteristics (S-T Characteristics)

MHMF series (400 W)

• Note that the motor characteristics may vary due to the existence of oil seal or brake.

Motor model	Unit	MHMF041 □ 1 □□		MHMF042 □ 1 □□	
Brake		without	with	without	with
Oil seal		without/with		without/with	
Output rating	W	400		400	
Matched drive		MCDL □ 31 □□		MBDL □ 25 □□	
Power supply of drive	V (AC)	100		200	
Rated torque	N•m	1.27		1.27	
Max.instantaneous speed	N•m	4.46		4.46	
Rated curren	A (rms)	4.1		2.1	
Max.instantaneous current	A (o-p)	20.3		10.4	
Rated rotational speed	r/min	3000		3000	
Max.rotational speed	r/min	6500		6500	
Rotor inertia	$\times 10^{-4}$ kg•m^2	0.56	0.58	0.56	0.58

MHMF series (400 W)

Without oil seal

●MHMF041□1□□

Input voltage to driver: AC100 V

(Dotted line represents torque at 10 % less voltage.)

* Continuous torque vs. ambient temp.

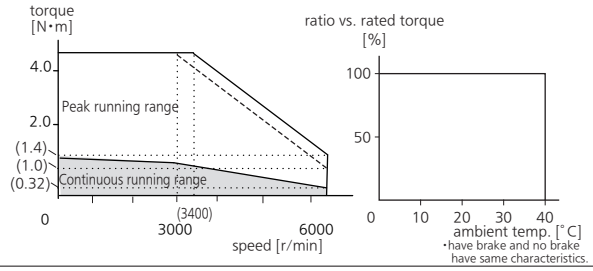

●MHMF042□1□□

Input voltage to driver: AC200 V

(Dotted line represents torque at 10 % less voltage.)

* Continuous torque vs. ambient temp.

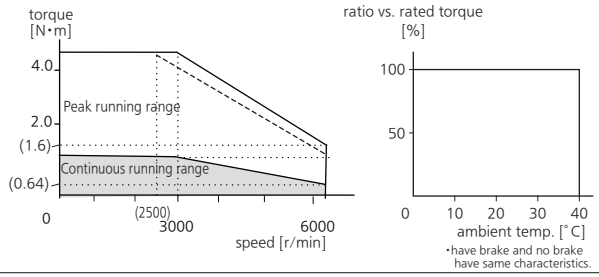

With oil seal

●MHMF041□1□□

Input voltage to driver: AC100 V

(Dotted line represents torque at 10 % less voltage.)

* Continuous torque vs. ambient temp.

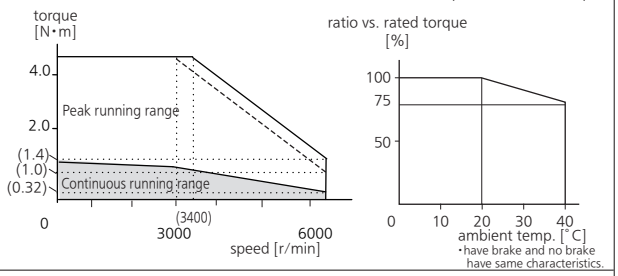

●MHMF042□1□□

Input voltage to driver: AC200 V

(Dotted line represents torque at 10 % less voltage.)

* Continuous torque vs. ambient temp.

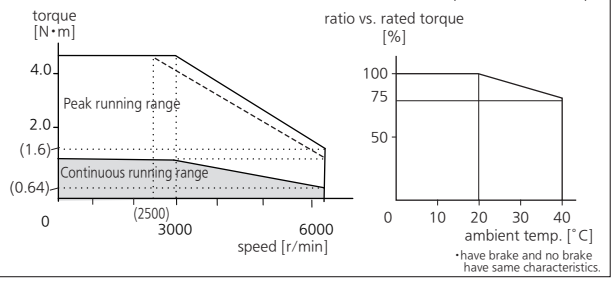

* These are subject to change. Contact us when you use these values for your machine design.

6. Motor Characteristics (S-T Characteristics)

MHMF series (750 W to 1.0 kW(□80))

• Note that the motor characteristics may vary due to the existence of oil seal or brake.

Motor model	Unit	MHMF082 □ 1 □□		MHMF092 □ 1 □□	
Brake		without	with	without	with
Oil seal		without/with		without/with	
Output rating	W	750		1000	
Matched drive		MCDL □ 35 □□		MDDL □ 55 □□	
Power supply of drive	V (AC)	200		200	
Rated torque	N•m	2.39		3.18	
Max.instantaneous speed	N•m	8.36		11.1	
Rated curren	A (rms)	3.8		5.7	
Max.instantaneous current	A (o-p)	18.8		28.2	
Rated rotational speed	r/min	3000		3000	
Max.rotational speed	r/min	6000		6000	
Rotor inertia	$\times 10^{-4}$ kg•m^2	1.56	1.66	2.03	2.13

MHMF series (750 W to 1.0 kW(□80))

Without oil seal	With oil seal

●MHMF082□1□□

Input voltage to driver: AC200 V
(Dotted line represents torque at 10 % less voltage.)

* Continuous torque vs. ambient temp.

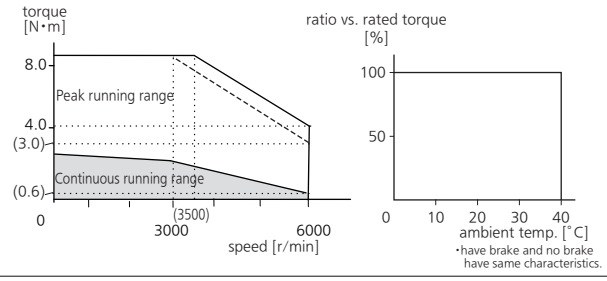

●MHMF082□1□□

Input voltage to driver: AC200 V
(Dotted line represents torque at 10 % less voltage.)

* Continuous torque vs. ambient temp.

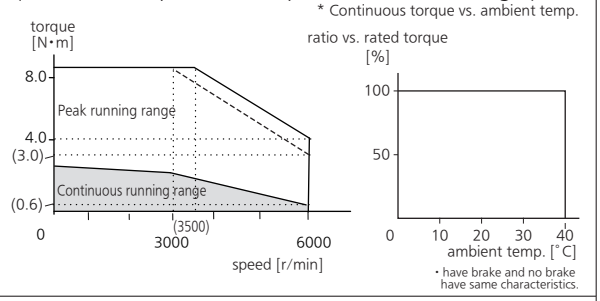

●MHMF092□1□□

Input voltage to driver: AC200 V
(Dotted line represents torque at 10 % less voltage.)

* Continuous torque vs. ambient temp.

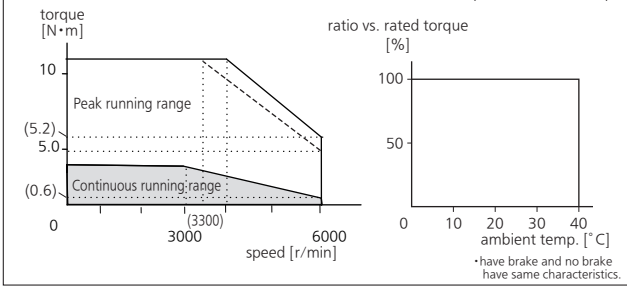

●MHMF092□1□□

Input voltage to driver: AC200 V
(Dotted line represents torque at 10 % less voltage.)

* Continuous torque vs. ambient temp.

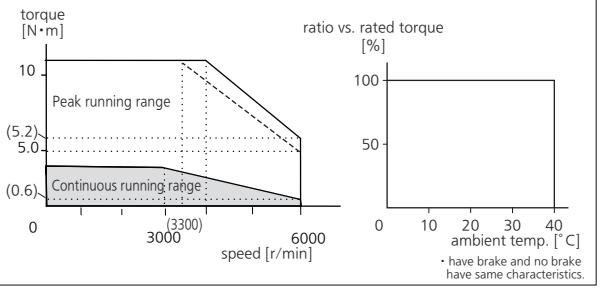

* These are subject to change. Contact us when you use these values for your machine design.

6. Motor Characteristics (S-T Characteristics)

MHMF series(1.0 kW (□ 130) to 2.0 kW)

• Note that the motor characteristics may vary due to the existence of oil seal or brake.

Motor model	Unit	MHMF102 □ 1 □□		MHMF152 □ 1 □□		MHMF202 □ 1 □□	
Brake		without	with	without	with	without	with
Oil seal		with		with		with	
Output rating	kW	1.0		1.5		2.0	
Matched drive		MDDL □ 45 □□		MDDL □ 55 □□		MEDL □ 83 □□	
Power supply of drive	V (AC)	200		200		200	
Rated torque	N•m	4.77		7.16		9.55	
Continuous stall torque	N•m	4.77		7.16		9.55	
Max.instantaneous speed	N•m	14.3		21.5		28.6	
Rated curren	A (rms)	5.2		8.0		12.5	
Max.instantaneous current	A (o-p)	22		34		53	
Rated rotational speed	r/min	2000		2000		2000	
Max.rotational speed	r/min	3000		3000		3000	
Rotor inertia	$\times 10^{-4}$ kg•m^2	22.9	24.1	33.4	34.6	55.7	61.0

MHMF series (1.0 kW(□130) to 2.0 kW)

With oil seal

●MHMF102□1□□

Input voltage to driver: AC200 V
(Dotted line represents torque at 10 % less voltage.)

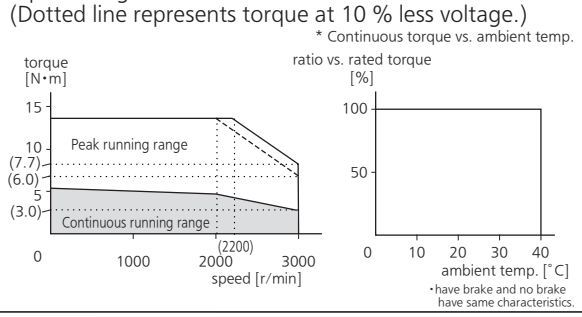

●MHMF152□1□□

Input voltage to driver: AC200 V
(Dotted line represents torque at 10 % less voltage.)

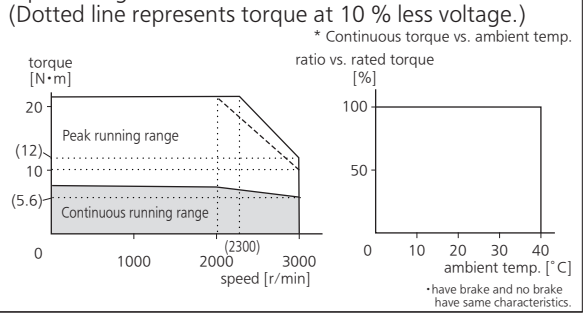

●MHMF202□1□□

Input voltage to driver: AC200 V
(Dotted line represents torque at 10 % less voltage.)

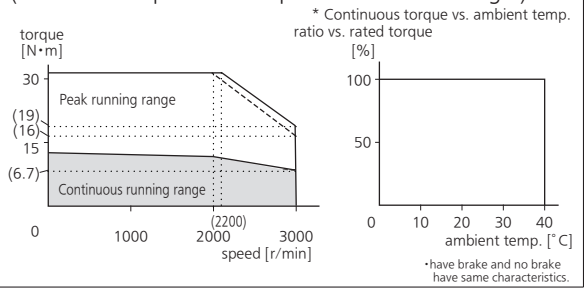

* These are subject to change. Contact us when you use these values for your machine design.

6. Motor Characteristics (S-T Characteristics)

MHMF series (3.0 kW to 7.5 kW)

• Note that the motor characteristics may vary due to the existence of oil seal or brake.

Motor model	Unit	MHMF302 □ 1 □□		MHMF402 □ 1 □□		MHMF502 □ 1 □□		MHMF752 □ 1 □□	
Brake		without	with	without	with	without	with	without	with
Oil seal		with		with		with		with	
Output rating	kW	3.0		4.0		5.0		7.5	
Matched drive		MFDL □ A3 □□		MFDL □ B3 □□		MFDL □ B3 □□		MGDL □ C3 □□	
Power supply of drive	V (AC)	200		200		200		200	
Rated torque	N•m	14.3		19.1		23.9		47.8	
Max.instantaneous torque	N•m	43.0		57.3		71.6		125.0	
Rated curren	A (rms)	17.0		20.0		23.3		40.2	
Max.instantaneous current	A (o-p)	72		85		99		154	
Rated rotational speed	r/min	2000		2000		2000		1500	
Max.rotational speed	r/min	3000		3000		3000		3000	
Rotor inertia	$\times 10^{-4}$ kg•m²	85.3	90.7	104	110	146	151	272	279

MHMF series (3.0 kW to 7.5 kW)

With oil seal

●MHMF302□1□□

Input voltage to driver: AC200 V

(Dotted line represents torque at 10 % less voltage.)

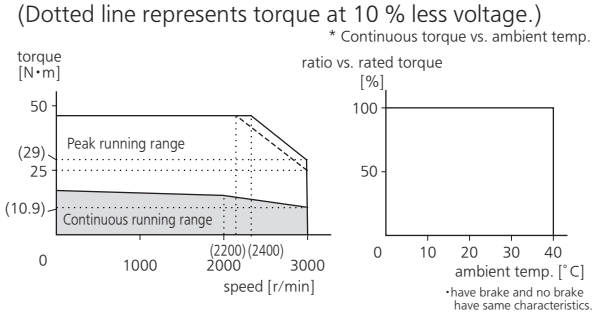

●MHMF402□1□□

Input voltage to driver: AC200 V

(Dotted line represents torque at 10 % less voltage.)

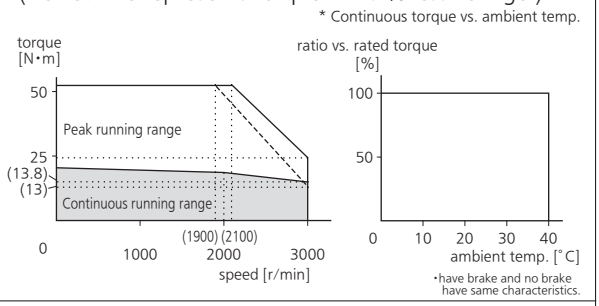

●MHMF502□1□□

Input voltage to driver: AC200 V

(Dotted line represents torque at 10 % less voltage.)

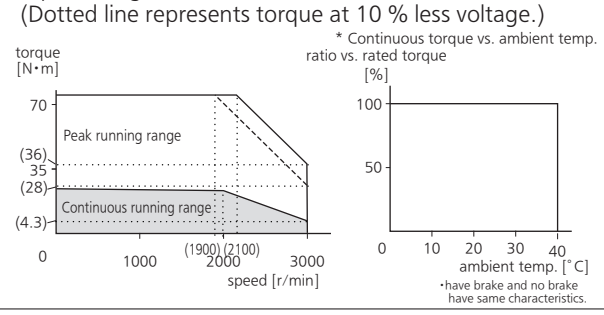

●MHMF752□1□□

Input voltage to driver: AC200 V

(Dotted line represents torque at 10 % less voltage.)

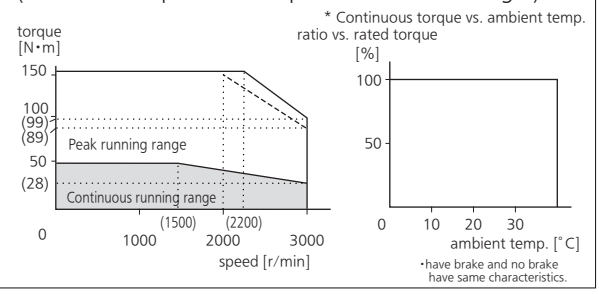

* These are subject to change. Contact us when you use these values for your machine design.

6. Motor Characteristics (S-T Characteristics)

MSMF series (1.0 kW to 2.0 kW) (400 V)

• Note that the motor characteristics may vary due to the existence of oil seal or brake.

Motor model	Unit	MSMF104 □ 1 □□		MSMF154 □ 1 □□		MSMF204 □ 1 □□	
Brake		without	with	without	with	without	with
Oil seal		with		with		with	
Output rating	kW	1.0		1.5		2.0	
Matched drive		MDDL □ 64 □□		MDDL □ 64 □□		MEDL □ 84 □□	
Power supply of drive	V(AC)	400		400		400	
Rated torque	N•m	3.18		4.77		6.37	
Stall torque	N•m	3.82		5.73		7.64	
Max.instantaneous current	N•m	9.55		14.3		19.1	
Rated curren	A(rms)	3.3		4.1		5.7	
Max.instantaneous current	A(o-p)	14		17.5		24	
Rated rotational speed	r/min	3000		3000		3000	
Max.rotational speed	r/min	5500		5500		5500	
Rotor inertia	$\times 10^{-4}$ kg•m^2	2.15	2.47	3.10	3.45	4.06	4.41

MSMF series (1.0 kW(□100) to 2.0 kW)

With oil seal

●MSMF104 □1□□
Input voltage to driver: AC200 V
(Dotted line represents torque at 10 % less voltage.)

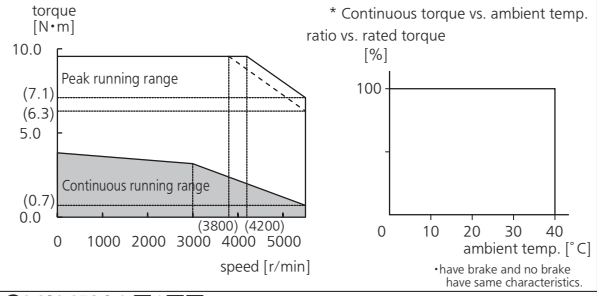

●MSMF154 □1□□
Input voltage to driver: AC200 V
(Dotted line represents torque at 10 % less voltage.)

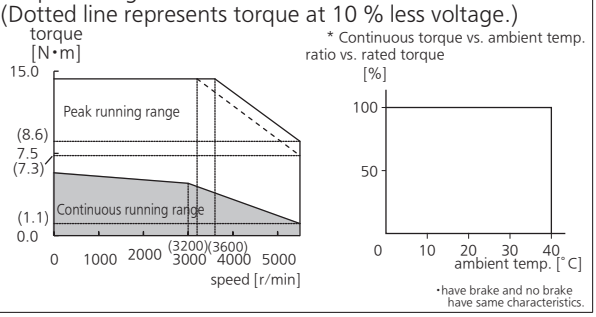

●MSMF204 □1□□
Input voltage to driver: AC200 V
(Dotted line represents torque at 10 % less voltage.)

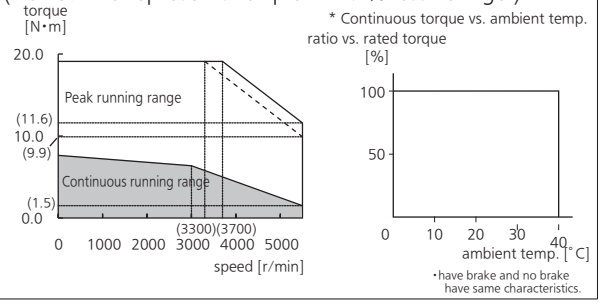

* These are subject to change. Contact us when you use these values for your machine design.

6. Motor Characteristics (S-T Characteristics)

MSMF series (3.0 kW to 5.0 kW)(400 V)

• Note that the motor characteristics may vary due to the existence of oil seal or brake.

Motor model	Unit	MSMF304 □ 1 □□		MSMF404 □ 1 □□		MSMF504 □ 1 □□	
Brake		without	with	without	with	without	with
Oil seal		with		with		with	
Output rating	kW	3.0		4.0		5.0	
Matched drive		MFDL □ A4 □□		MFDL □ B4 □□		MFDL □ B4 □□	
Power supply of drive	V(AC)	400		400		400	
Rated torque	N•m	9.55		12.7		15.9	
Stall torque	N•m	11.0		15.3		19.1	
Max.instantaneous current	N•m	28.7		38.2		47.8	
Rated curren	A(rms)	9.1		10.1		12.6	
Max.instantaneous current	A(o-p)	38.5		42.7		53.6	
Rated rotational speed	r/min	3000		3000		3000	
Max.rotational speed	r/min	5500		5000		5000	
Rotor inertia	$\times 10^{-4}$ kg•m^2	7.04	7.38	14.4	15.6	19.0	20.2

MSMF series(3.0 kW to 5.0 kW)

With oil seal

●MSMF304□1□□
Input voltage to driver: AC200 V
(Dotted line represents torque at 10 % less voltage.)

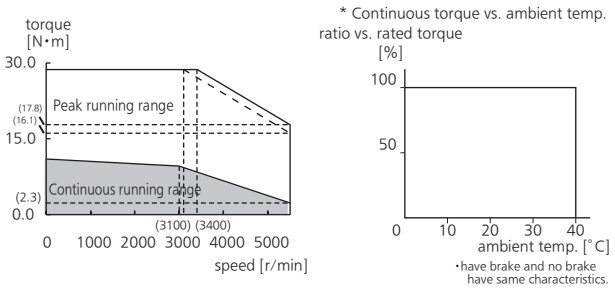

●MSMF404□1□□
Input voltage to driver: AC200 V
(Dotted line represents torque at 10 % less voltage.)

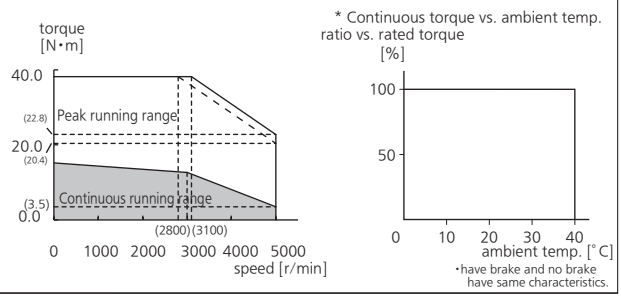

●MSMF504□1□□
Input voltage to driver: AC200 V
(Dotted line represents torque at 10 % less voltage.)

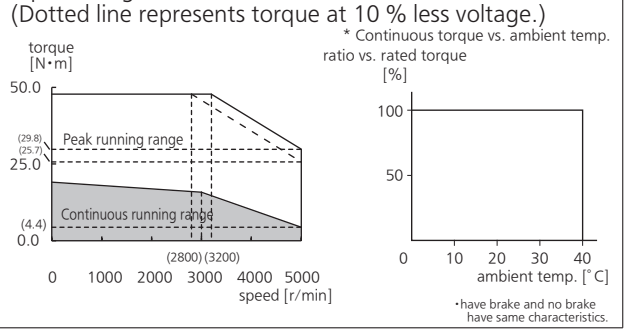

* These are subject to change. Contact us when you use these values for your machine design.

6. Motor Characteristics (S-T Characteristics)

MDMF series(1.0 kW to 2.0 kW)(400 V)

• Note that the motor characteristics may vary due to the existence of oil seal or brake.

Motor model	Unit	MDMF104 □ 1 □□		MDMF154 □ 1 □□		MDMF204 □ 1 □□	
Brake		without	with	without	with	without	with
Oil seal		with		with		with	
Output rating	kW	1.0		1.5		2.0	
Matched drive		MDDL □ 54 □□		MDDL □ 64 □□		MEDL □ 84 □□	
Power supply of drive	V(AC)	400		400		400	
Rated torque	N•m	4.77		7.16		9.55	
Stall torque	N•m	5.25		7.52		10.0	
Max.instantaneous current	N•m	14.3		21.5		28.7	
Rated curren	A(rms)	2.7		4.0		5.1	
Max.instantaneous current	A(o-p)	11.4		17.0		21.6	
Rated rotational speed	r/min	2000		2000		2000	
Max.rotational speed	r/min	3500		3500		3500	
Rotor inertia	$\times 10^{-4}$ kg•m^2	6.18	7.40	9.16	10.4	12.1	13.3

MDMF series (1.0 kW to 2.0 kW)

With oil seal

●MDMF104□1□□
Input voltage to driver: AC200 V
(Dotted line represents torque at 10 % less voltage.)

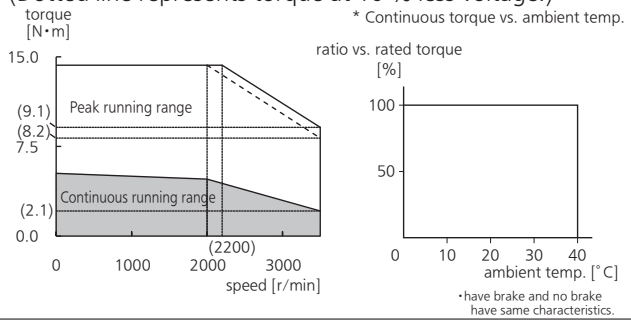

●MDMF154□1□□
nput voltage to driver: AC200 V
(Dotted line represents torque at 10 % less voltage.)

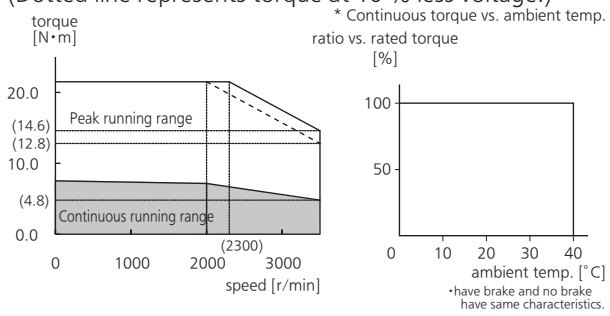

●MDME204□1□□
Input voltage to driver: AC200 V
(Dotted line represents torque at 10 % less voltage.)

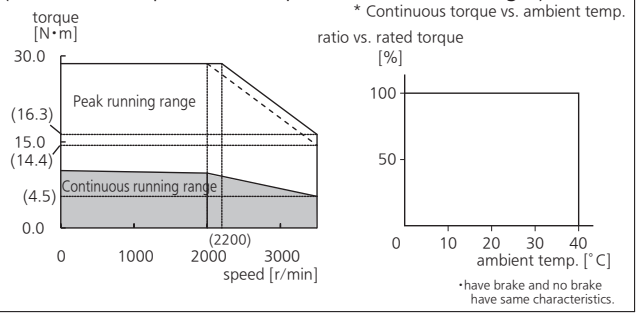

* These are subject to change. Contact us when you use these values for your machine design.

6. Motor Characteristics (S-T Characteristics)

MDMF series(3.0 kW to 5.0 kW)(400 V)

• Note that the motor characteristics may vary due to the existence of oil seal or brake.

Motor model	Unit	MDMF304 □ 1 □□		MDMF404 □ 1 □□		MDMF504 □ 1 □□	
Brake		without	with	without	with	without	with
Oil seal		with		with		with	
Output rating	kW	3.0		4.0		5.0	
Matched drive		MFDL □ A4 □□		MFDL □ B4 □□		MFDL □ B4 □□	
Power supply of drive	V(AC)	400		400		400	
Rated torque	N•m	14.3		19.1		23.9	
Stall torque	N•m	15.0		22.0		26.3	
Max.instantaneous current	N•m	43.0		57.3		71.6	
Rated curren	A(rms)	8.6		10.0		12.0	
Max.instantaneous current	A(o-p)	36.4		42.5		51.0	
Rated rotational speed	r/min	2000		2000		2000	
Max.rotational speed	r/min	3500		3500		3000	
Rotor inertia	$\times 10^{-4}$ kg•m^2	18.6	19.6	46.9	52.3	58.2	63.0

MDMF series (3.0 kW to 5.0 kW)

With oil seal

●MDME304□1□□
Input voltage to driver: AC200 V
(Dotted line represents torque at 10 % less voltage.)

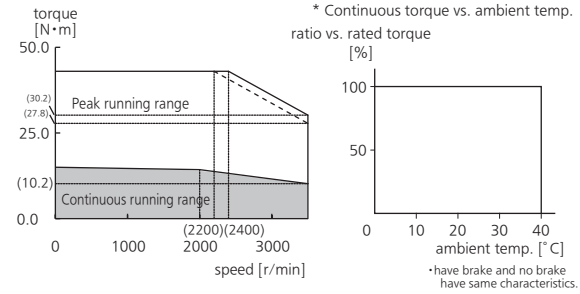

●MDME404□1□□
Input voltage to driver: AC200 V
(Dotted line represents torque at 10 % less voltage.)

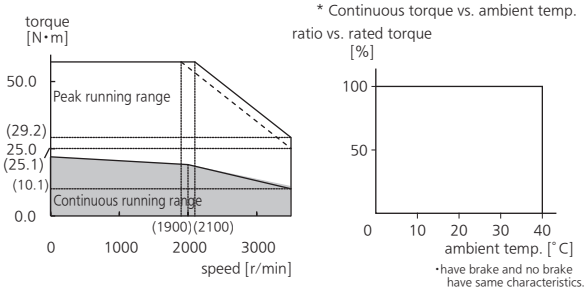

●MDME504□1□□
Input voltage to driver: AC200 V
(Dotted line represents torque at 10 % less voltage.)

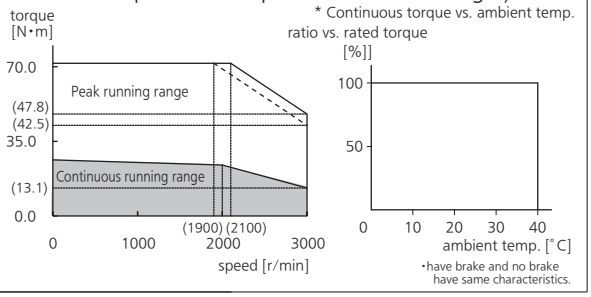

* These are subject to change. Contact us when you use these values for your machine design.

6. Motor Characteristics (S-T Characteristics)

MGMF series(0.85 kW to 1.8 kW)(400 V)

• Note that the motor characteristics may vary due to the existence of oil seal or brake.

Motor model	Unit	MGMF094 □ 1 □□		MGMF134 □ 1 □□		MGMF184 □ 1 □□	
Brake		without	with	without	with	without	with
Oil seal		with		with		with	
Output rating	kW	0.85		1.3		1.8	
Matched drive		MDDL □ 54 □□		MDDL □ 64 □□		MEDL □ 84 □□	
Power supply of drive	V(AC)	400		400		400	
Rated torque	N•m	5.41		8.28		11.5	
Stall torque	N•m	5.41		8.28		11.5	
Max.instantaneous current	N•m	14.3		23.3		28.8	
Rated curren	A(rms)	2.9		4.7		5.9	
Max.instantaneous current	A(o-p)	11.0		18.5		21.0	
Rated rotational speed	r/min	1500		1500		1500	
Max.rotational speed	r/min	3500		3500		3500	
Rotor inertia	$\times 10^{-4}$ kg•m^2	6.18	7.40	9.16	10.4	12.1	13.3

MGMF series (850 W to 1.8 kW)

With oil seal

●MGMF094□1□□
Input voltage to driver: AC200 V
(Dotted line represents torque at 10 % less voltage.)

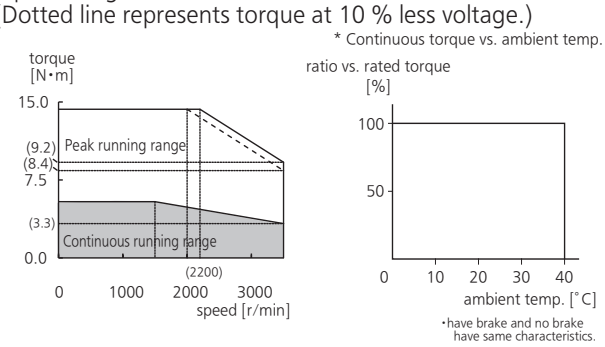

●MGMF134□1□□
Input voltage to driver: AC200 V
(Dotted line represents torque at 10 % less voltage.)

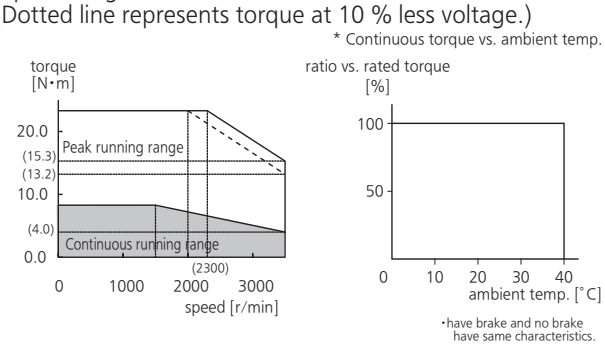

●MGMF184□1□□
Input voltage to driver: AC200 V
(Dotted line represents torque at 10 % less voltage.)

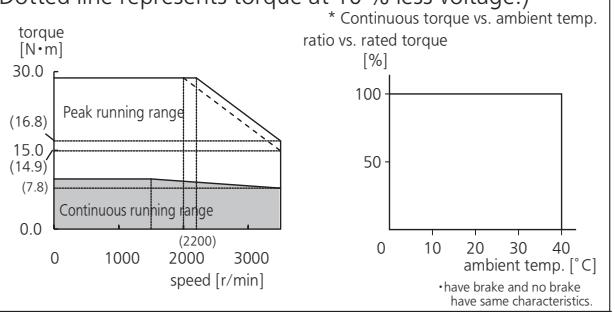

* These are subject to change. Contact us when you use these values for your machine design.

6. Motor Characteristics (S-T Characteristics)

MGMF series(2.4 kW to 4.4 kW)(400 V)

• Note that the motor characteristics may vary due to the existence of oil seal or brake.

Motor model	Unit	MGMF244 □ 1 □□		MGMF294 □ 1 □□		MGMF444 □ 1 □□	
Brake		without	with	without	with	without	with
Oil seal		with		with		with	
Output rating	kW	2.4		2.9		4.4	
Matched drive		MFDL □ A4 □□		MFDL □ B4 □□		MFDL □ B4 □□	
Power supply of drive	V(AC)	400		400		400	
Rated torque	N•m	15.3		18.5		28.0	
Stall torque	N•m	15.3		18.5		28.0	
Max.instantaneous current	N•m	45.8		55.4		70.0	
Rated curren	A(rms)	8.0		9.7		13.6	
Max.instantaneous current	A(o-p)	34		41		48	
Rated rotational speed	r/min	1500		1500		1500	
Max.rotational speed	r/min	3000		3500		3000	
Rotor inertia	$\times 10^{-4}$ kg•m^2	46.9	52.3	46.9	52.3	58.2	63.0

MGMF series (2.4 kW to 4.4 kW)

With oil seal

●MGMF244□1□□
Input voltage to driver: AC200 V
(Dotted line represents torque at 10 % less voltage.)

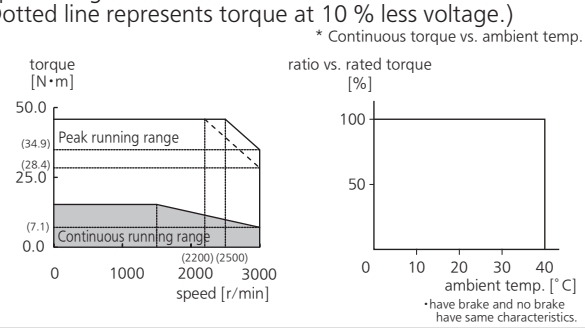

●MGMF294□1□□
Input voltage to driver: AC200 V
(Dotted line represents torque at 10 % less voltage.)

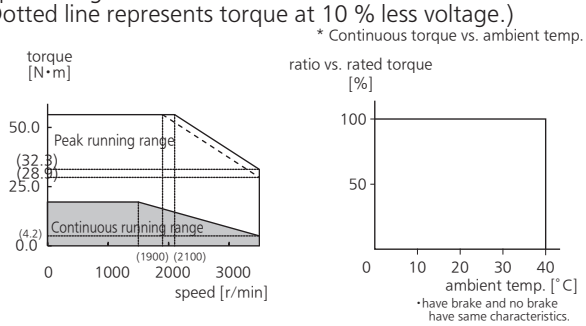

●MGMF444□1□□
Input voltage to driver: AC200 V
(Dotted line represents torque at 10 % less voltage.)

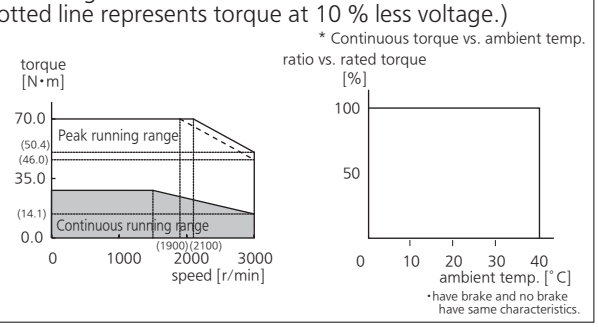

* These are subject to change. Contact us when you use these values for your machine design.

6. Motor Characteristics (S-T Characteristics)

MHMF series(200 W to 400 W)(400 V)

• Note that the motor characteristics may vary due to the existence of oil seal or brake.

Motor model	Unit	MHMF024 □ 1 □□		MHMF044 □ 1 □□	
Brake		without	with	without	with
Oil seal		without/with		without/with	
Output rating	kW	200		400	
Matched drive		MDDL □ 44 □□		MDDL □ 44 □□	
Power supply of drive	V(AC)	400		400	
Rated torque	N•m	0.64		1.27	
Stall torque	N•m	0.76		1.40	
Max.instantaneous current	N•m	2.23		4.46	
Rated curren	A(rms)	0.8		1.1	
Max.instantaneous current	A(o-p)	3.8		5.3	
Rated rotational speed	r/min	3000		3000	
Max.rotational speed	r/min	6500		6500	
Rotor inertia	$\times 10^{-4}$ kg•m^2	0.29	0.31	0.56	0.58

MHMF series (0.2 kW to 0.4 kW)

Without/With oil seal

●MHMF024□1□□
Input voltage to driver: AC200 V
(Dotted line represents torque at 10 % less voltage.)

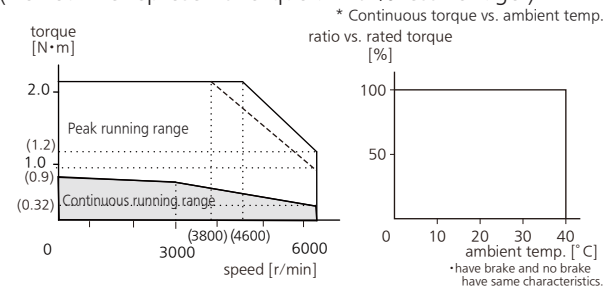

●MHMF044□1□□
Input voltage to driver: AC200 V
(Dotted line represents torque at 10 % less voltage.)

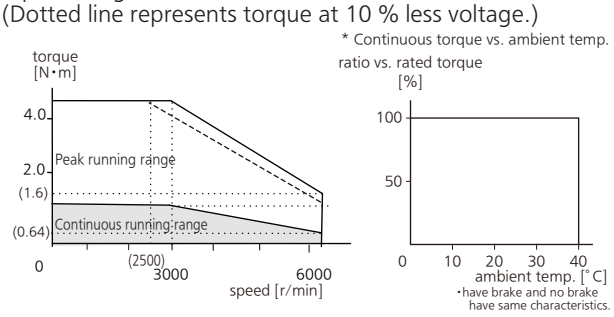

* These are subject to change. Contact us when you use these values for your machine design.

6. Motor Characteristics (S-T Characteristics)

MHMF series(750 W to 1.0 kW(□80))(400 V)

• Note that the motor characteristics may vary due to the existence of oil seal or brake.

Motor model	Unit	MHMF084□1□□		MHMF094□1□□	
Brake		without	with	without	with
Oil seal		without/with		without/with	
Output rating	kW	750		1000	
Matched drive		MDDL□54□□		MDDL□64□□	
Power supply of drive	V(AC)	400		400	
Rated torque	N•m	2.39		3.18	
Stall torque	N•m	2.86		3.34	
Max.instantaneous current	N•m	8.36		11.1	
Rated curren	A(rms)	2.0		2.9	
Max.instantaneous current	A(o-p)	9.8		14.2	
Rated rotational speed	r/min	3000		3000	
Max.rotational speed	r/min	6000		6000	
Rotor inertia	$\times 10^{-4}$ kg•m^2	1.56	1.66	2.03	2.13

MHMF series (750 W to 1.0 kW(□80))

Without/With oil seal

●MHMF084□1□□
Input voltage to driver: AC200 V
(Dotted line represents torque at 10 % less voltage.)

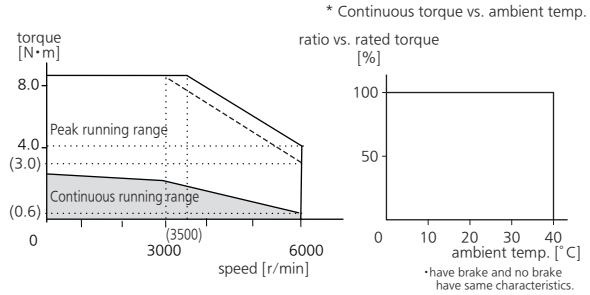

●MHMF094□1□□
Input voltage to driver: AC200 V
(Dotted line represents torque at 10 % less voltage.)

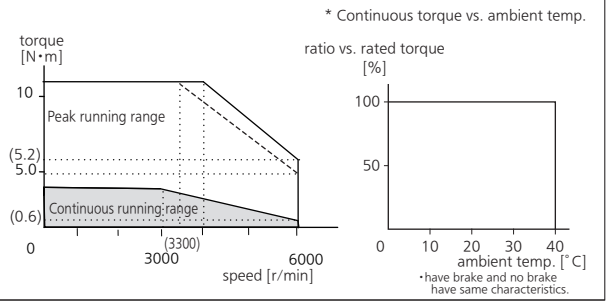

* These are subject to change. Contact us when you use these values for your machine design.

6. Motor Characteristics (S-T Characteristics)

MHMF series(1.0 kW(□130) to 2.0 kW)(400 V)

• Note that the motor characteristics may vary due to the existence of oil seal or brake.

Motor model	Unit	MHMF104□1□□		MHMF154□1□□		MHMF204□1□□	
Brake		without	with	without	with	without	with
Oil seal		with		with		with	
Output rating	kW	1.0		1.5		2.0	
Matched drive		MDDL□54□□		MDDL□64□□		MEDL□84□□	
Power supply of drive	V(AC)	400		400		400	
Rated torque	N•m	4.77		7.16		9.55	
Stall torque	N•m	5.25		7.52		11.5	
Max.instantaneous current	N•m	14.3		21.5		28.7	
Rated curren	A(rms)	2.7		4.0		6.2	
Max.instantaneous current	A(o-p)	11.4		17.0		26.5	
Rated rotational speed	r/min	2000		2000		2000	
Max.rotational speed	r/min	3500		3500		3500	
Rotor inertia	$\times 10^{-4}$ kg•m^2	22.9	24.1	33.4	34.6	55.7	61.0

MSMF series (1.0 kW(□130) to 2.0 kW)

With oil seal

●MHMF104□1□□
Input voltage to driver: AC200 V
(Dotted line represents torque at 10 % less voltage.)

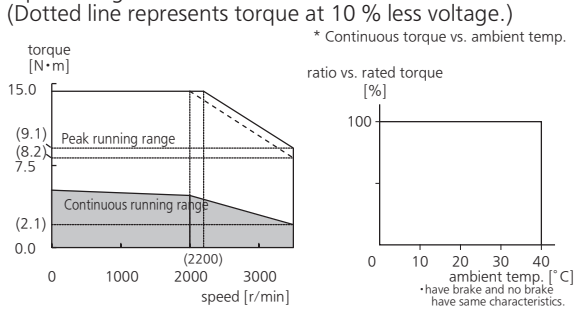

●MHMF154□1□□
Input voltage to driver: AC200 V
(Dotted line represents torque at 10 % less voltage.)

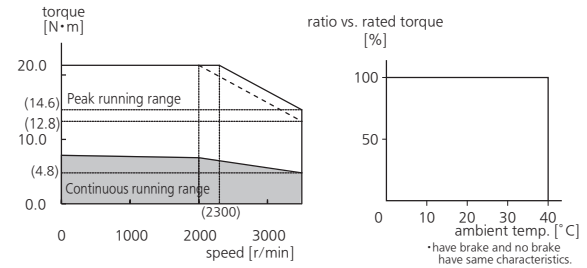

●MHMF204□1□□
Input voltage to driver: AC200 V
(Dotted line represents torque at 10 % less voltage.)

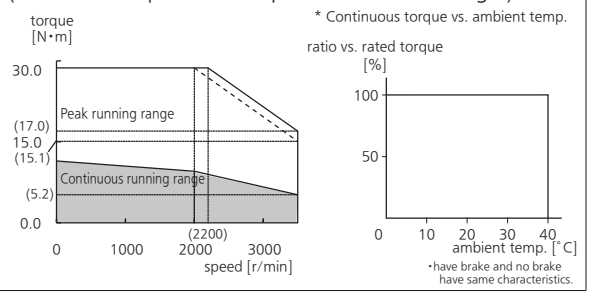

* These are subject to change. Contact us when you use these values for your machine design.

6. Motor Characteristics (S-T Characteristics)

MHMF series(3.0 kW to 5.0 kW)(400 V)

• Note that the motor characteristics may vary due to the existence of oil seal or brake.

Motor model	Unit	MHMF304 □ 1 □□		MHMF404 □ 1 □□		MHMF504 □ 1 □□	
Brake		without	with	without	with	without	with
Oil seal		with		with		with	
Output rating	kW	3.0		4.0		5.0	
Matched drive		MFDL □ A4 □□		MFDL □ B4 □□		MFDL □ B4 □□	
Power supply of drive	V(AC)	400		400		400	
Rated torque	N•m	14.3		19.1		23.9	
Stall torque	N•m	17.2		22.0		26.3	
Max.instantaneous current	N•m	43.0		57.3		71.6	
Rated curren	A(rms)	8.8		10.0		12.0	
Max.instantaneous current	A(o-p)	37.4		42.5		51.0	
Rated rotational speed	r/min	2000		2000		2000	
Max.rotational speed	r/min	3500		3500		3000	
Rotor inertia	$\times 10^{-4}$ kg•m^2	85.3	90.7	104	110	146	151

MHMF series (3.0 kW to 5.0 kW)

With oil seal

●MHMF304□1□□
Input voltage to driver: AC200 V
(Dotted line represents torque at 10 % less voltage.)

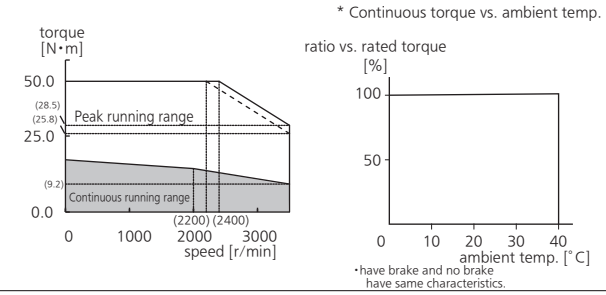

●MHMF404□1□□
Input voltage to driver: AC200 V
(Dotted line represents torque at 10 % less voltage.)

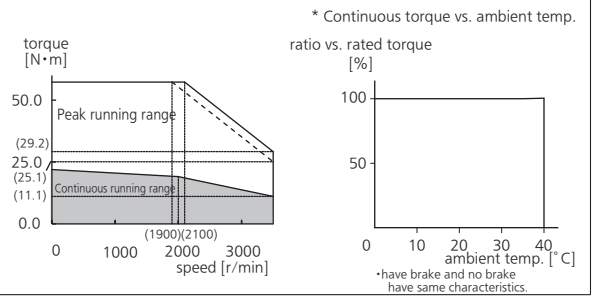

●MHMF504□1□□
Input voltage to driver: AC200 V
(Dotted line represents torque at 10 % less voltage.)

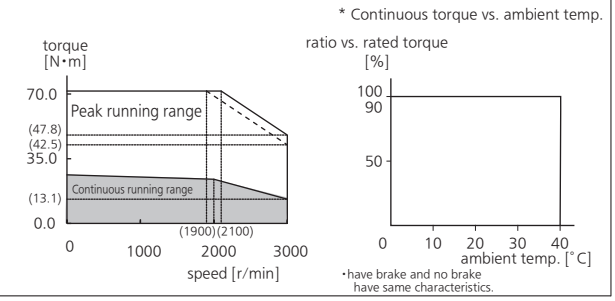

* These are subject to change. Contact us when you use these values for your machine design.

7. Dimensions

Driver

A-frame(Base-mounting type)

[Unit: mm]

Do not use threaded holes not recorded in dimension drawing.

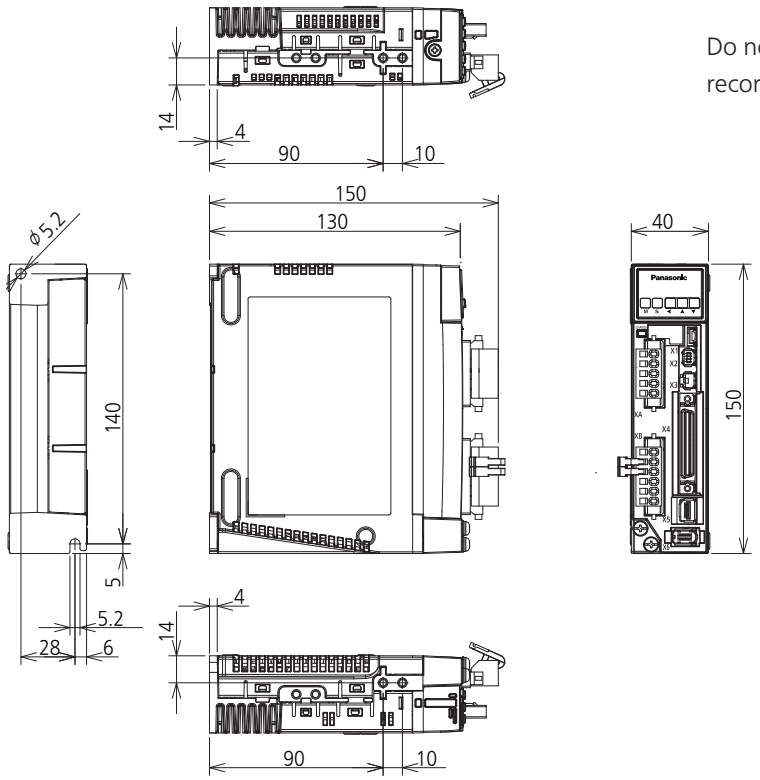

Mass: 0.8 kg

A-frame(Rack-mounting type)

[Unit: mm]

Do not use threaded holes not recorded in dimension drawing.

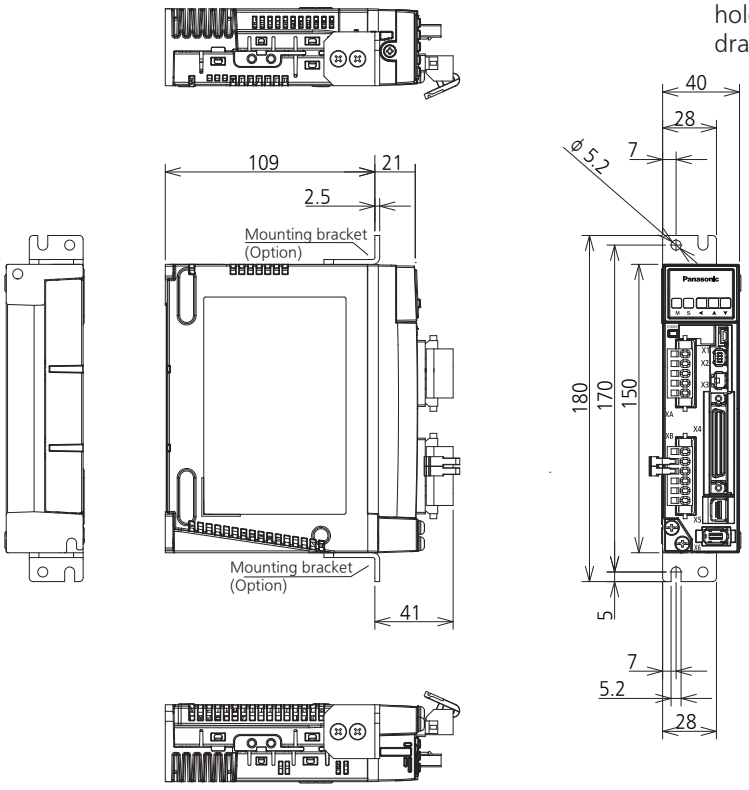

Mass: 0.9 kg

Related page
- P.1-7 "Driver"
- P.1-33 "Check of the Combination of the Driver and the Motor"
- P.2-10 "Driver and List of Applicable Peripheral Equipments"

B-frame(Base-mounting type)

[Unit: mm]

Do not use threaded holes not recorded in dimension drawing.

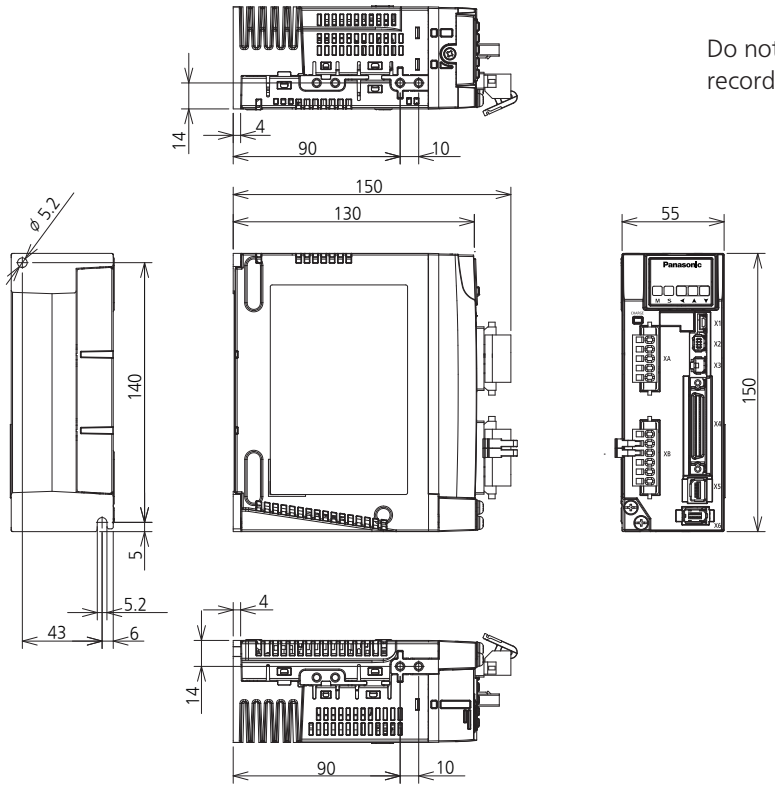

Mass: 1.0 kg

B-frame(Rack-mounting type)

[Unit: mm]

Do not use threaded holes not recorded in dimension drawing.

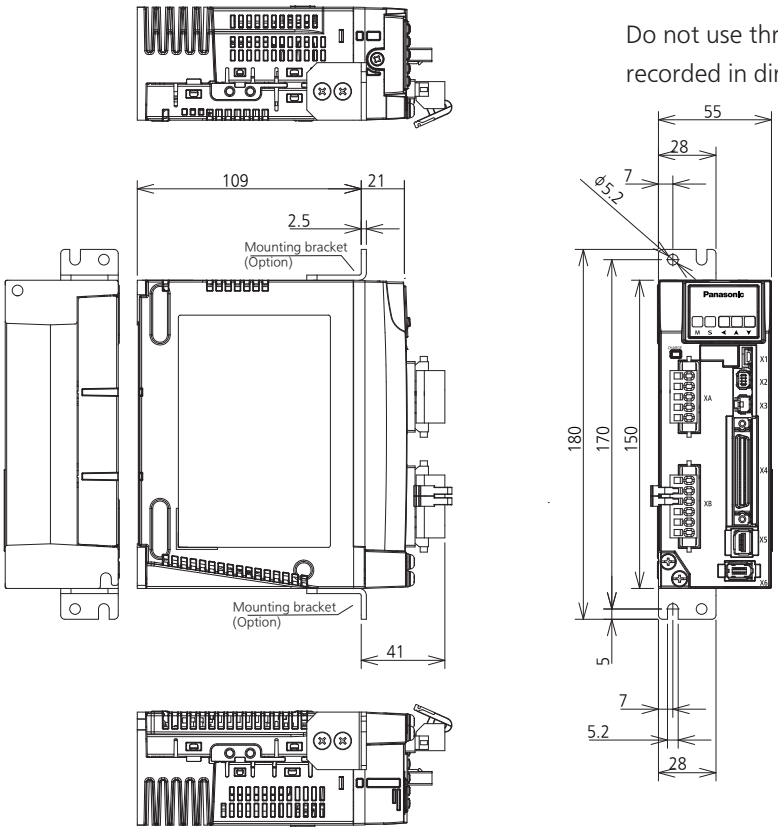

Mass: 1.1 kg

Related page
• P.1-8 "Driver" • P.1-34 "Check of the Combination of the Driver and the Motor"
• P.2-12 "Driver and List of Applicable Peripheral Equipments"

C-frame(Base-mounting type)

[Unit: mm]

Do not use threaded holes not recorded in dimension drawing.

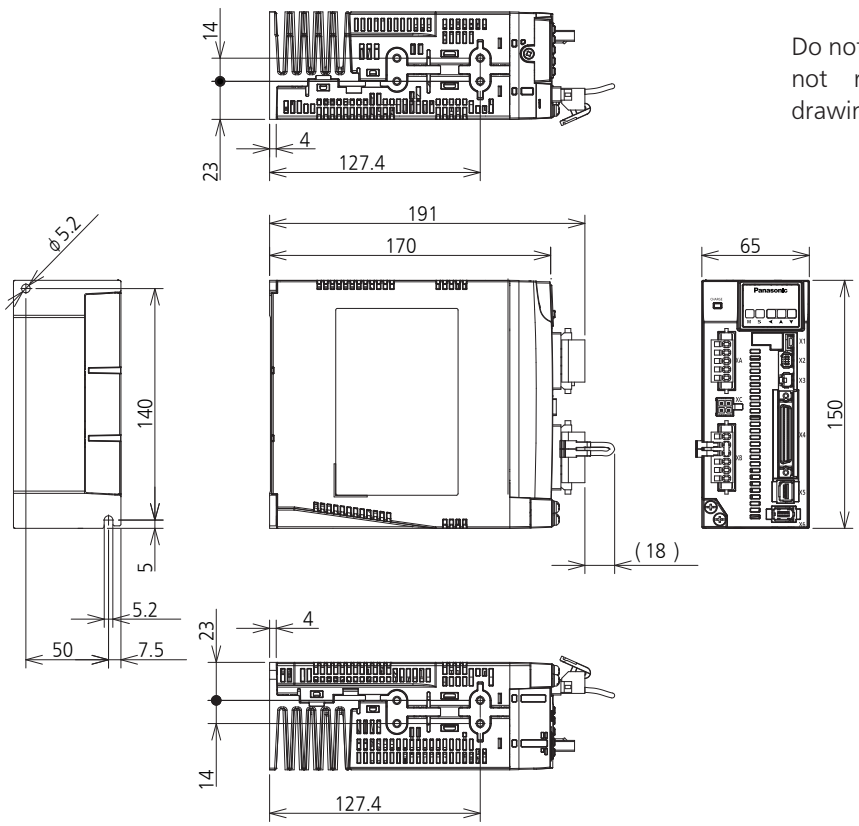

Mass:1.6 kg

C-frame(Rack-mounting type)

[Unit: mm]

Do not use threaded holes not recorded in dimension drawing.

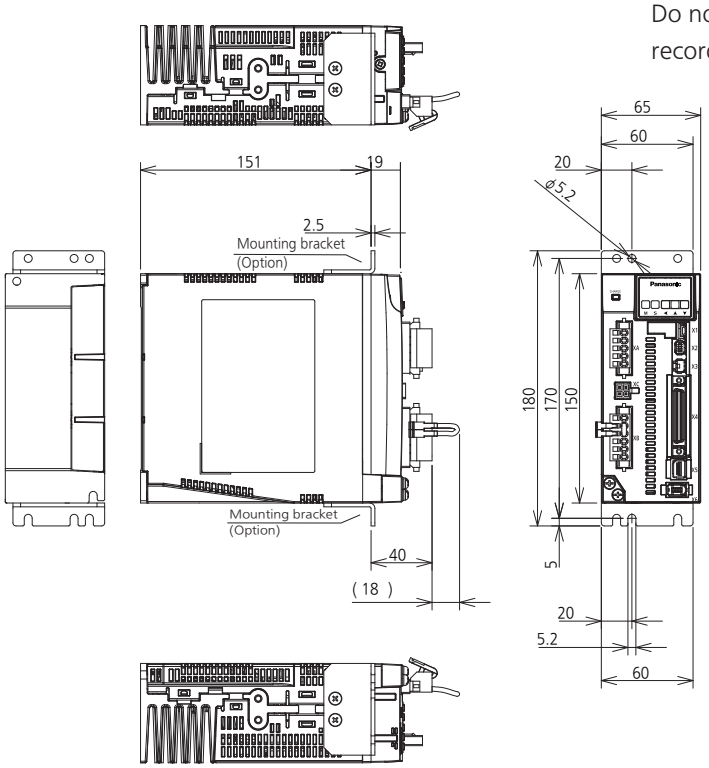

Mass: 1.7 kg

Related page
• P.1-8 "Driver" • P.1-34 "Check of the Combination of the Driver and the Motor"
• P.2-12 "Driver and List of Applicable Peripheral Equipments"

D-frame(Base-mounting type)200 V/400 V

[Unit: mm]

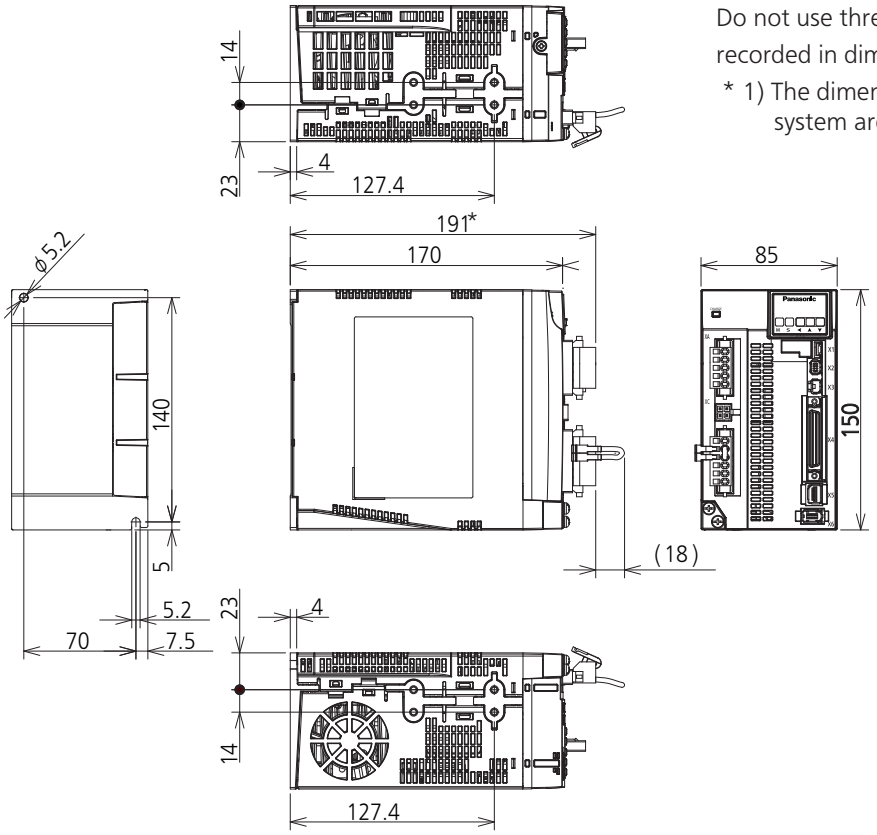

Do not use threaded holes not recorded in dimension drawing.

* 1) The dimensions of the 400 V system are 188 mm.

Mass: 2.1 kg

D-frame(Rack-mounting type)200 V/400 V

[Unit: mm]

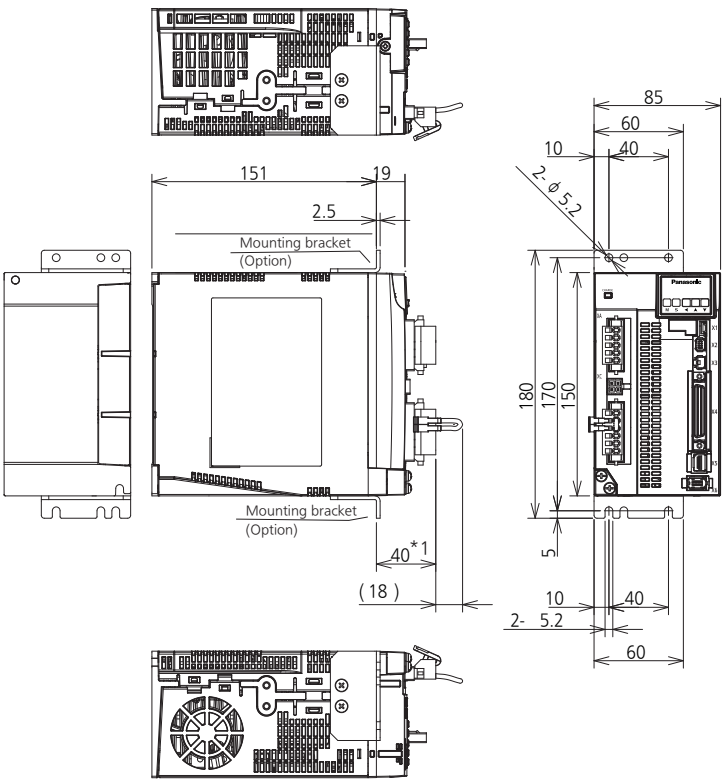

Do not use threaded holes not recorded in dimension drawing.

* 1) The dimensions of the 400 V system are 37 mm.

Mass: 2.1 kg

Related page
• P.1-8 “Driver” • P.1-34 “Check of the Combination of the Driver and the Motor”
• P.2-12 “Driver and List of Applicable Peripheral Equipments”

E-frame(Base-mounting type)200 V/400 V

[Unit: mm]

Do not use threaded holes not recorded in dimension drawing.

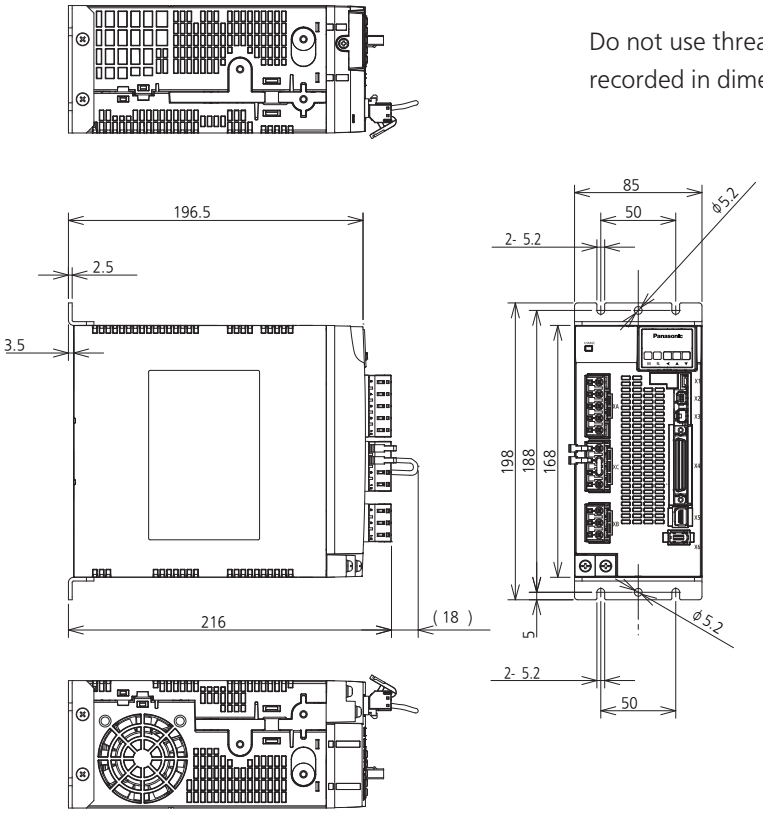

Mass: 2.7 kg

E-frame(Rack-mounting type)200 V/400 V

[Unit: mm]

Do not use threaded holes not recorded in dimension drawing.

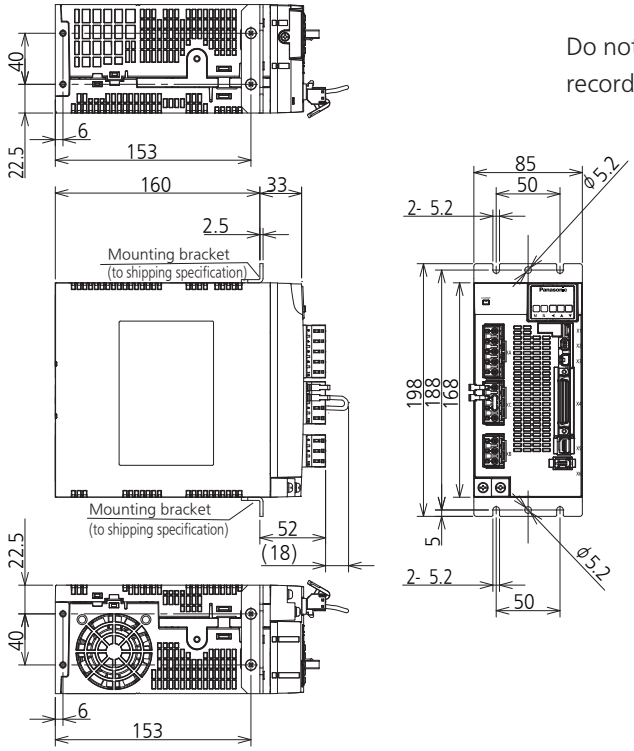

Mass: 2.7 kg

Related page
• P.1-8 “Driver” • P.1-34 “Check of the Combination of the Driver and the Motor”
• P.2-12 “Driver and List of Applicable Peripheral Equipments”

F-frame(Base-mounting type)200 V/400 V

[Unit: mm]

Do not use threaded holes not recorded in dimension drawing.

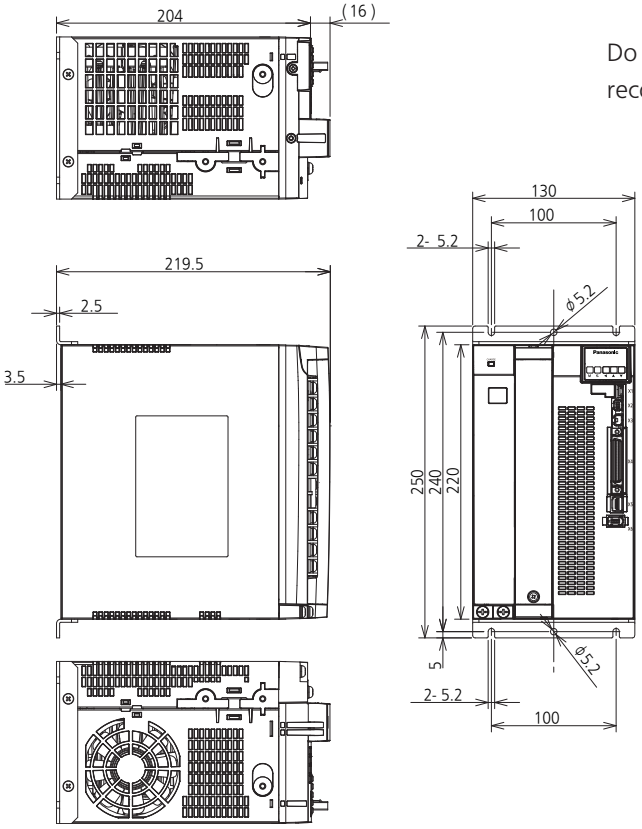

Mass: 5.2 kg

F-frame(Rack-mounting type)200 V/400 V

[Unit: mm]

Do not use threaded holes not recorded in dimension drawing.

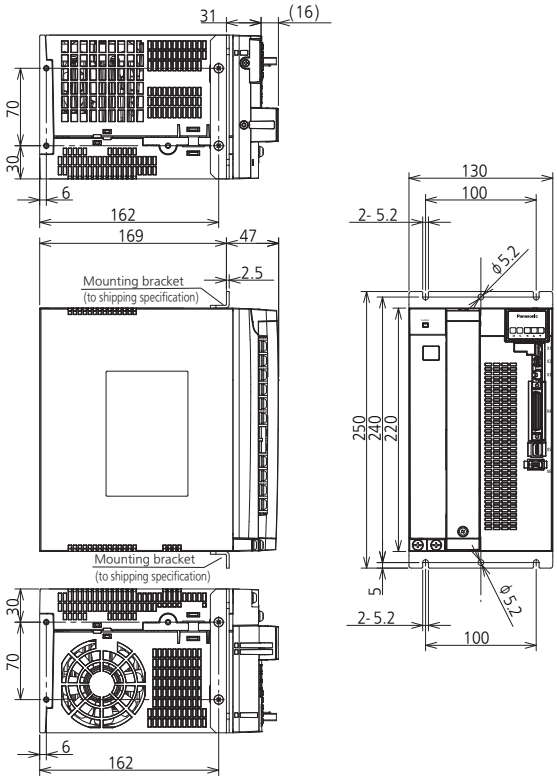

Mass: 5.2 kg

Related page
- P.1-8 “Driver”
- P.1-34 “Check of the Combination of the Driver and the Motor”
- P.2-12 “Driver and List of Applicable Peripheral Equipments”

G-frame(Backplane-fixed type)200 V/400 V

[Unit: mm]

Do not use threaded holes not recorded in dimension drawing.

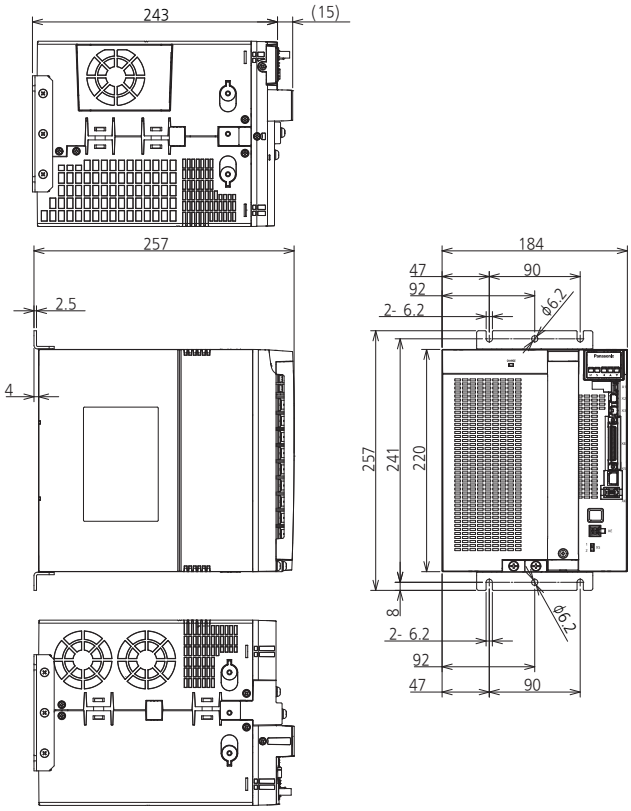

Mass: 8.2 kg

G-frame(Rack-mounting type) 200 V/400 V

[Unit: mm]

Do not use threaded holes not recorded in dimension drawing.

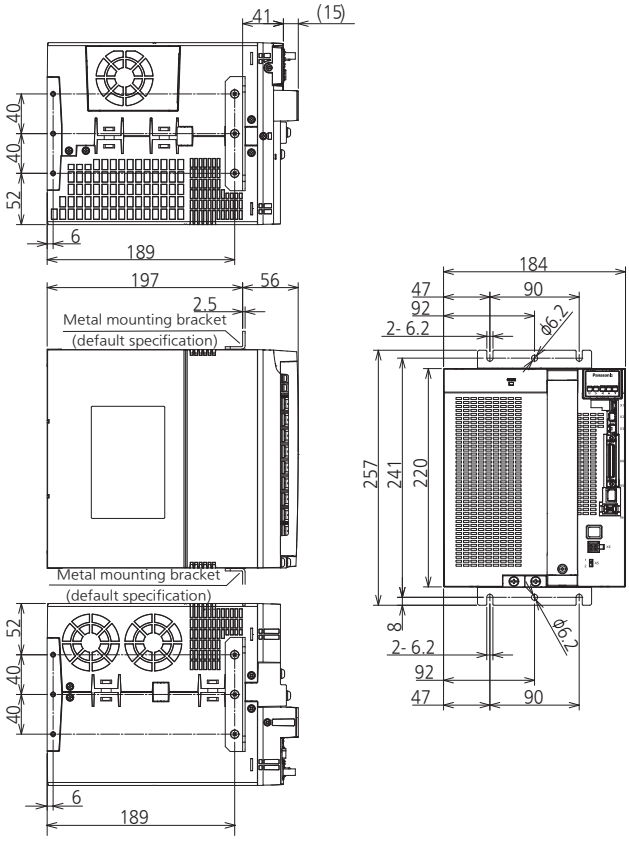

Mass: 8.2 kg

Related page
• P.1-8 “Driver” • P.1-34 “Check of the Combination of the Driver and the Motor”
• P.2-12 “Driver and List of Applicable Peripheral Equipments”

H-frame(Backplane-fixed type)200 V/400 V

[Unit: mm]

Do not use threaded holes not recorded in dimension drawing.

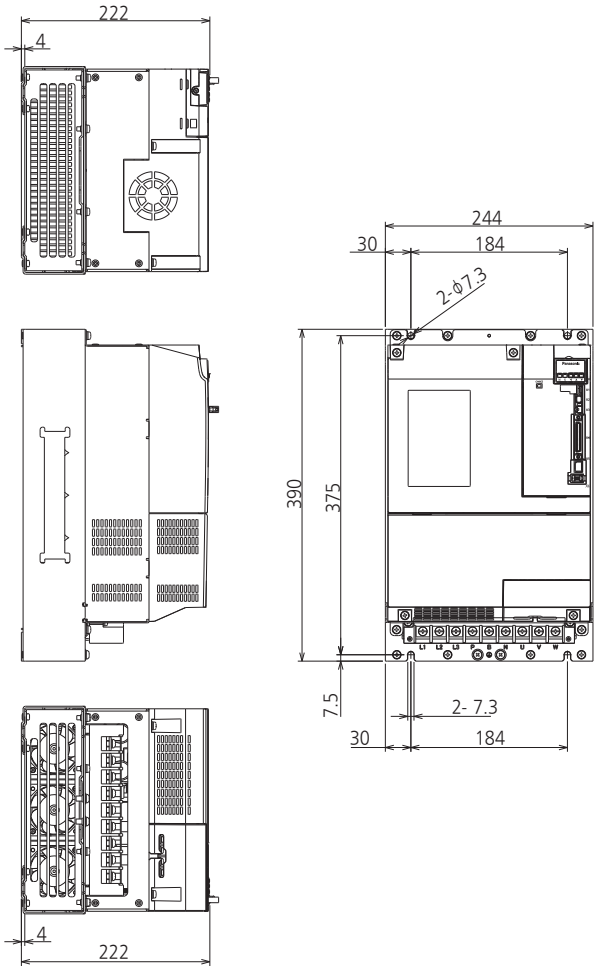

Mass: 14.2 kg(15 kW)
15.2 kg(22 kW)

Related page
• P.1-8 “Driver” • P.1-34 “Check of the Combination of the Driver and the Motor”
• P.2-12 “Driver and List of Applicable Peripheral Equipments”

7. Dimensions

Motor(Absolute encoder type)

MSMF 50 W to 100 W(Leadwire type)

[Unit: mm]

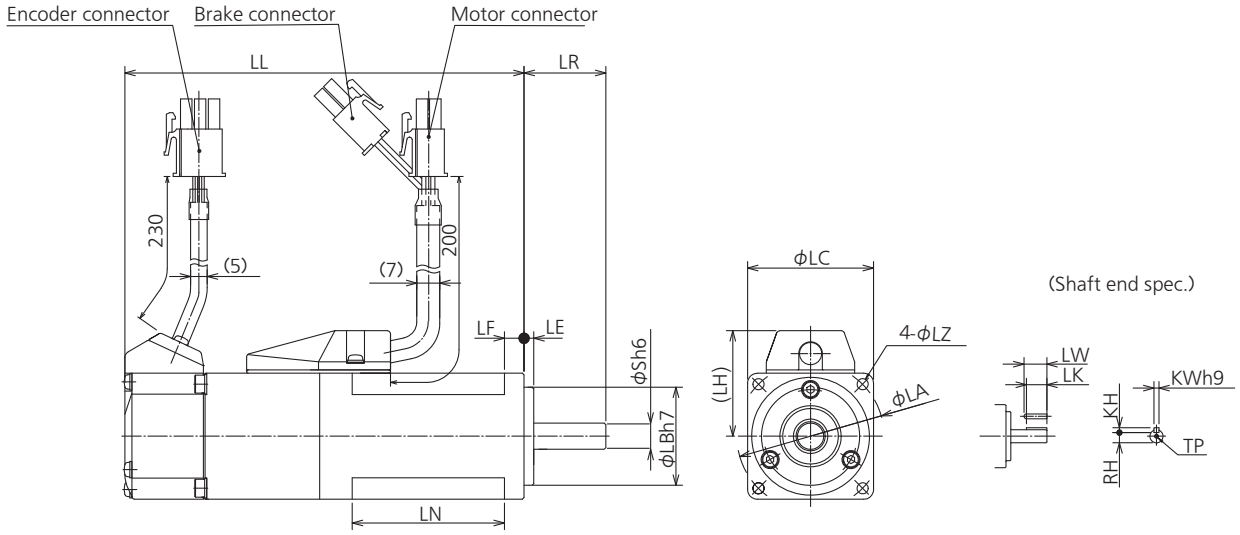

* Dimensions are subject to change without notice. Contact us or a dealer for the latest information.

[Unit: mm]

MSMF series (Low inertia)			
Motor output		50 W	100 W
Motor model	MSMF	5AZL1□2	01□L1□2
LL	Without brake	72	92
	With brake	102	122
LR		25	
S		8	
LA		45	
LB		30	
LC		38	
LE		3	
LF		6	
LH		32	
LN		26.5	46.5
LZ		3.4	
Key way dimensions	LW	14	
	LK	12.5	
	KW	3	
	KH	3	
	RH	6.2	
	TP	M3 depth 6	
Mass (kg)	Without brake	0.32	0.47
	With brake	0.53	0.68
Connector specifications		Refer to P.2-56 “Specifications of Motor connector”	

Caution Reduce the moment of inertia ratio if high speed response operation is required.

Related page
- P.1-29 “Check of the Model”
- P.1-34 “Check of the Combination of the Driver and the Motor”
- P.7-61 “S-T Characteristics”

MSMF 50 W to 100 W(Connector type)

[Unit: mm]

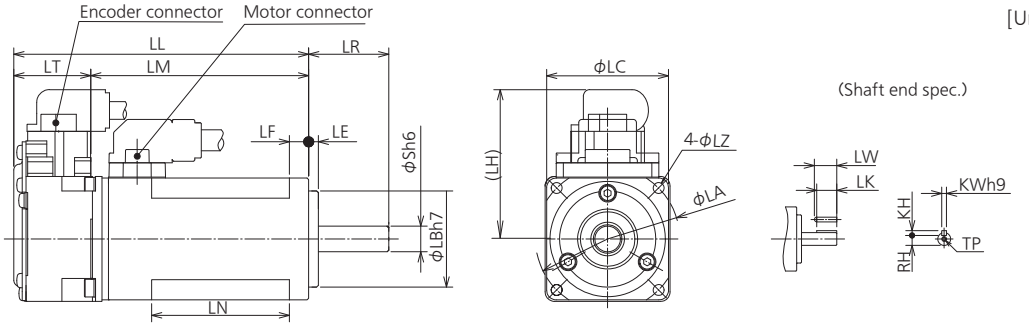

With brake

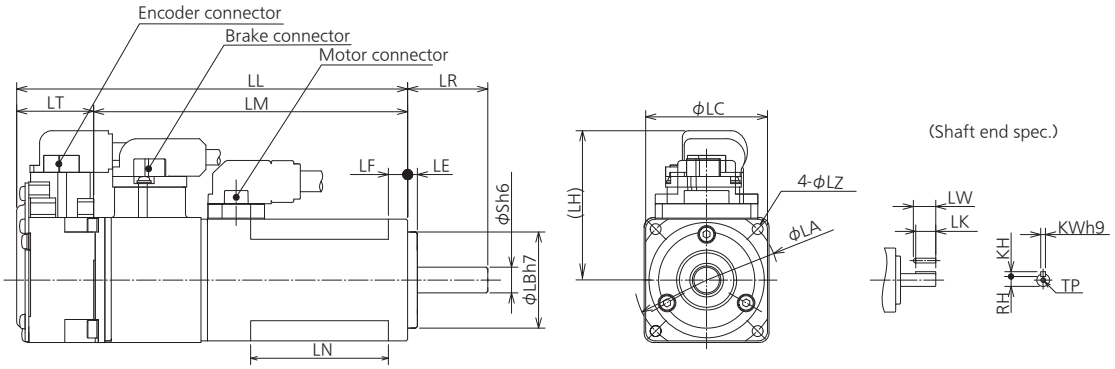

* Dimensions are subject to change without notice. Contact us or a dealer for the latest information.

[Unit: mm]

MSMF series (Low inertia)			
Motor output		50 W	100 W
Motor model	MSMF	5AZL1□1	01□L1□1
LL	Without brake	72	92
	With brake	102	122
LR		25	
S		8	
LA		45	
LB		30	
LC		38	
LE		3	
LF		6	
LH		46.6	
LM	Without brake	48	68
	With brake	78	98
LT		24	
LN		23	43
LZ		3.4	
Key way dimensions	LW	14	
	LK	12.5	
	KW	3	
	KH	3	
	RH	6.2	
	TP	M3 depth 6	
Mass (kg)	Without brake	0.32	0.47
	With brake	0.53	0.68
Connector specifications		Refer to P.2-56 “Specifications of Motor connector”	

Caution Reduce the moment of inertia ratio if high speed response operation is required.

Related page
- P.1-29 “Check of the Model”
- P.1-34 “Check of the Combination of the Driver and the Motor”
- P.7-61 “S-T Characteristics”

MSMF 200 W to 1.0 kW(□80)(Leadwire type)

[Unit: mm]

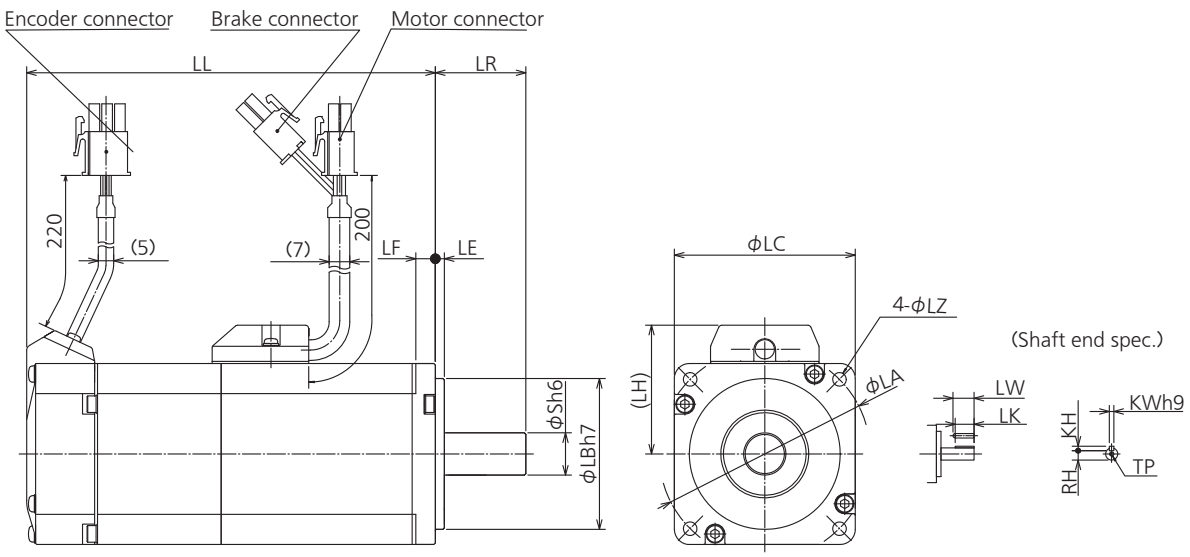

* Dimensions are subject to change without notice. Contact us or a dealer for the latest information.

[Unit: mm]

MSMF series (Low inertia)					
Motor output		200 W	400 W	750 W	1.0 kW
Motor model	MSMF	02□L1□2	04□L1□2	082L1□2	092L1□2
LL	Without brake	79.5	99	112.2	127.2
	With brake	116	135.5	149.2	164.2
LR		30		35	
S		11	14	19	
LA		70		90	
LB		50		70	
LC		60		80	
LE		3			
LF		6.5		8	
LH		43		53	
LZ		4.5		6	
Key way dimensions	LW	20	25	25	
	LK	18	22.5	22	
	KW	4	5	6	
	KH	4	5	6	
	RH	8.5	11	15.5	
	TP	M4 depth 8	M5 depth 10		
Mass (kg)	Without brake	0.82	1.2	2.3	2.8
	With brake	1.3	1.7	3.1	3.6
Connector specifications		Refer to P.2-56 “Specifications of Motor connector”			

Caution Reduce the moment of inertia ratio if high speed response operation is required.

Related page
- P.1-29 “Check of the Model”
- P.1-34 “Check of the Combination of the Driver and the Motor”
- P.7-61 “S-T Characteristics”

MSMF 200 W to 1.0 kW(□80)(Connector type)

[Unit: mm]

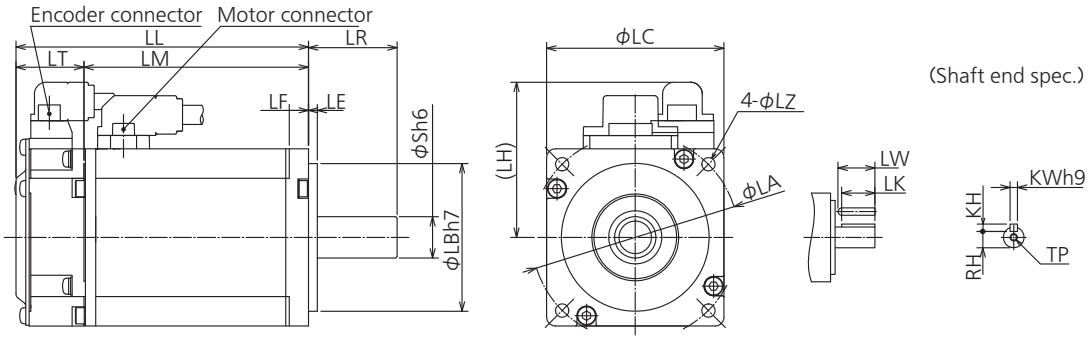

With brake

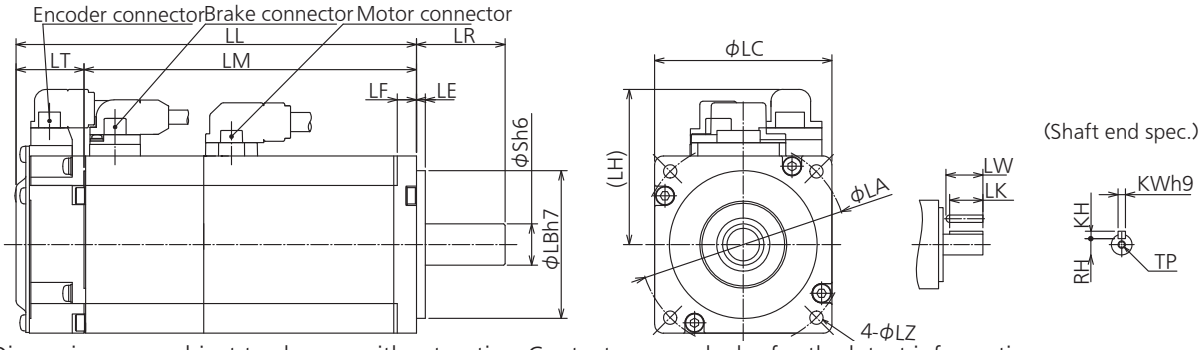

* Dimensions are subject to change without notice. Contact us or a dealer for the latest information.

[Unit: mm]

MSMF series (Low inertia)					
Motor output		200 W	400 W	750 W	1.0 kW
Motor model	MSMF	02□L1□1	04□L1□1	082L1□1	092L1□1
LL	Without brake	79.5	99	112.2	127.2
	With brake	116	135.5	148.2	163.2
LR		30		35	
S		11	14	19	
LA		70		90	
LB		50		70	
LC		60		80	
LE		3			
LF		6.5		8	
LH		52.5		60	
LM	Without brake	56.5	76	86.2	101.2
	With brake	93	112.5	122.2	137.2
LT		23		26	
LZ		4.5		6	
Key way dimensions	LW	20	25		
	LK	18	22.5	22	
	KW	4	5	6	
	KH	4	5	6	
	RH	8.5	11	15.5	
	TP	M4 depth 8	M5 depth 10		
Mass (kg)	Without brake	0.82	1.2	2.3	2.8
	With brake	1.3	1.7	3.1	3.6
Connector specifications		Refer to P.2-56 "Specifications of Motor connector"			

Caution Reduce the moment of inertia ratio if high speed response operation is required.

Related page
- P.1-29 "Check of the Model"
- P.1-34 "Check of the Combination of the Driver and the Motor"
- P.7-61 "S-T Characteristics"

MSMF 1.0 kW(□100)to 5.0 kW(□100)(Encoder connector type JN2)

[Unit: mm]

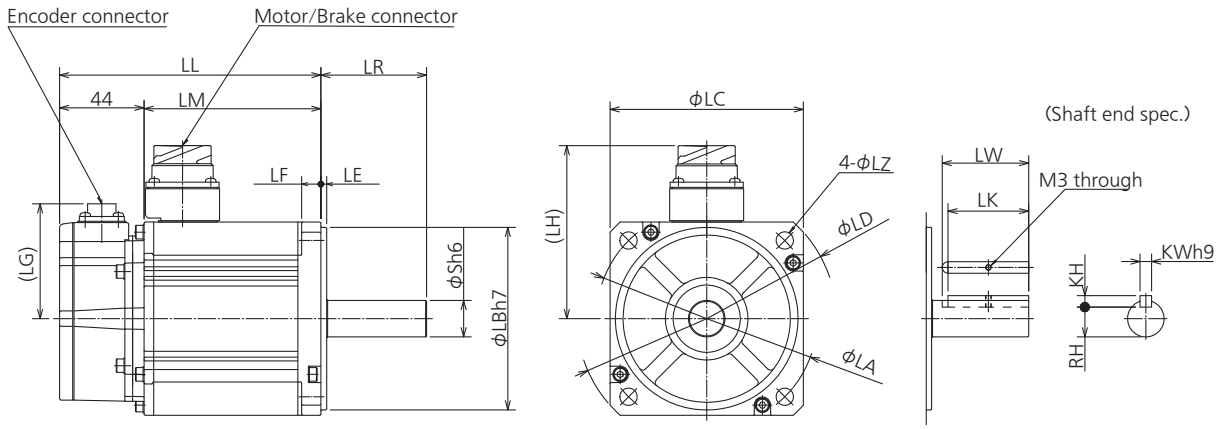

* Dimensions are subject to change without notice. Contact us or a dealer for the latest information.

[Unit: mm]

MSMF series (Low inertia)							
Motor output		1.0 kW	1.5 kW	2.0 kW	3.0 kW	4.0 kW	5.0 kW
Motor model MSMF		102L1□□	152L1□□	202L1□□	302L1□□	402L1□□	502L1□□
LL	Without brake	136	154.5	173.5	185	204	239
	With brake	163	181.5	200.5	210	232	267
LR		55				65	
S		19			22	24	
LA		115			145		
LB		95			110		
LC		100			120	130	
LD		135			162	165	
LE		3				6	
LF		10			12		
LG		60					
LH	Without brake	90			113	118	
	With brake	101			113	118	
LM	Without brake	92	110.5	129.5	141	160	195
	With brake	119	137.5	156.5	166	188	223
LZ		9					
Key way dimensions	LW	45				55	
	LK	42			41	51	
	KW	6			8		
	KH	6			7		
	RH	15.5			18	20	
Mass (kg)	Without brake	3.6	4.6	5.6	8.7	11.5	14.5
	With brake	4.7	5.6	6.6	9.9	13.2	16.1
Connector specifications		Refer to P.2-56 "Specifications of Motor connector"					

Caution Reduce the moment of inertia ratio if high speed response operation is required.

Related page
• P.1-29 "Check of the Model" • P.1-34 "Check of the Combination of the Driver and the Motor"
• P.7-61 "S-T Characteristics"

MSMF 1.0 kW(□100)to 5.0 kW(Encoder connector type JL10)

[Unit: mm]

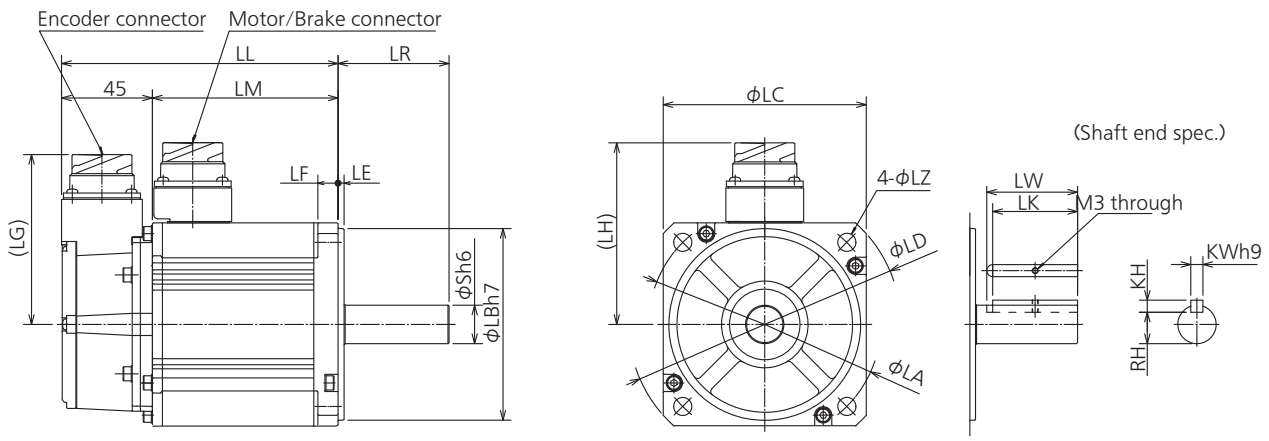

* Dimensions are subject to change without notice. Contact us or a dealer for the latest information.

[Unit: mm]

MSMF series (Low inertia)							
Motor output		1.0 kW	1.5 kW	2.0 kW	3.0 kW	4.0 kW	5.0 kW
Motor model	MSMF	102L1□□	152L1□□	202L1□□	302L1□□	402L1□□	502L1□□
LL	Without brake	137	155.5	174.5	186	205	240
	With brake	164	182.5	201.5	211	233	268
LR		55				65	
S		19			22	24	
LA		115			145		
LB		95			110		
LC		100			120	130	
LD		135			162	165	
LE		3				6	
LF		10			12		
LG		84					
LH	Without brake	90			113	118	
	With brake	101			113	118	
LM	Without brake	92	110.5	129.5	141	160	195
	With brake	119	137.5	156.5	166	188	223
LZ		9					
Key way dimensions	LW	45				55	
	LK	42			41	51	
	KW	6			8		
	KH	6			7		
	RH	15.5			18	20	
Mass (kg)	Without brake		4.6	5.6	8.7	11.5	14.5
	With brake		5.6	6.6	9.9	13.2	16.1
Connector specifications		Refer to P.2-56 “Specifications of Motor connector”					

Caution Reduce the moment of inertia ratio if high speed response operation is required.

Related page
- P.1-29 “Check of the Model”
- P.1-34 “Check of the Combination of the Driver and the Motor”
- P.7-61 “S-T Characteristics”

MSMF 1.0 kW to 5.0 kW(400 V)

[Unit: mm]

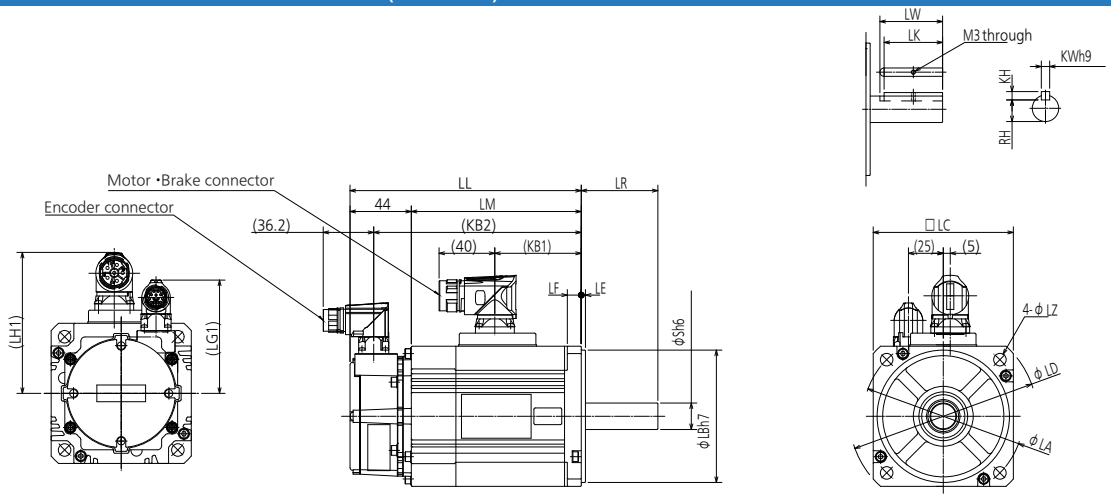

* Dimensions are subject to change. Further confirmation for dimension is required when using for design.

[Unit : mm]

MSMF series (Low inertia)							
Motor output		1.0 kW	1.5 kW	2.0 kW	3.0 kW	4.0 kW	5.0 kW
Motor model	MSMF	104L1□□M	154L1□□M	204L1□□M	304L1□□M	404L1□□M	504L1□□M
LL	Without brake	139	157.5	176.5	188	207	242
	With brake	166	184.5	203.5	213	235	270
LR		55				65	
S		19			22	24	
LA		115			145		
LB		95			110		
LC		100			120	130	
LD		135			162	165	
LE		3				6	
LF		10			12		
LH1		101.2			101.5	106.5	
LG1		81.3					
LM	Without brake	95	113.5	132.5	144	163	198
	With brake	122	140.5	159.5	169	191	226
KB1		62	80.5	99.5	121	139	174
KB2	Without brake	122	140.5	159.5	171	190	225
	With brake	149	167.5	186.5	196	218	253
LZ		9					
Key way dimensions	LW	45				55	
	LK	42			41	51	
	KW	6			8		
	KH	6			7		
	RH	15.5			18	20	
Mass (kg)	Without brake	3.6	4.6	5.6	8.7	11.5	14.5
	With brake	4.7	5.6	6.6	9.9	13.2	16.1
Connector specifications		Refer to P.2-56 "Specifications of Motor connector"					

Caution Reduce the moment of inertia ratio if high speed response operation is required.

Related page
- P.1-29 "Check of the Model"
- P.1-34 "Check of the Combination of the Driver and the Motor"
- P.7-61 "S-T Characteristics"

Note
(1) 400 V specification motors are not sold in Japan.
In addition, 400 V specification motors purchased outside Japan and equipment equipped with 400 V specification motors cannot be brought into Japan.

MQMF 100 W to 400 W(Leadwire type)

[Unit: mm]

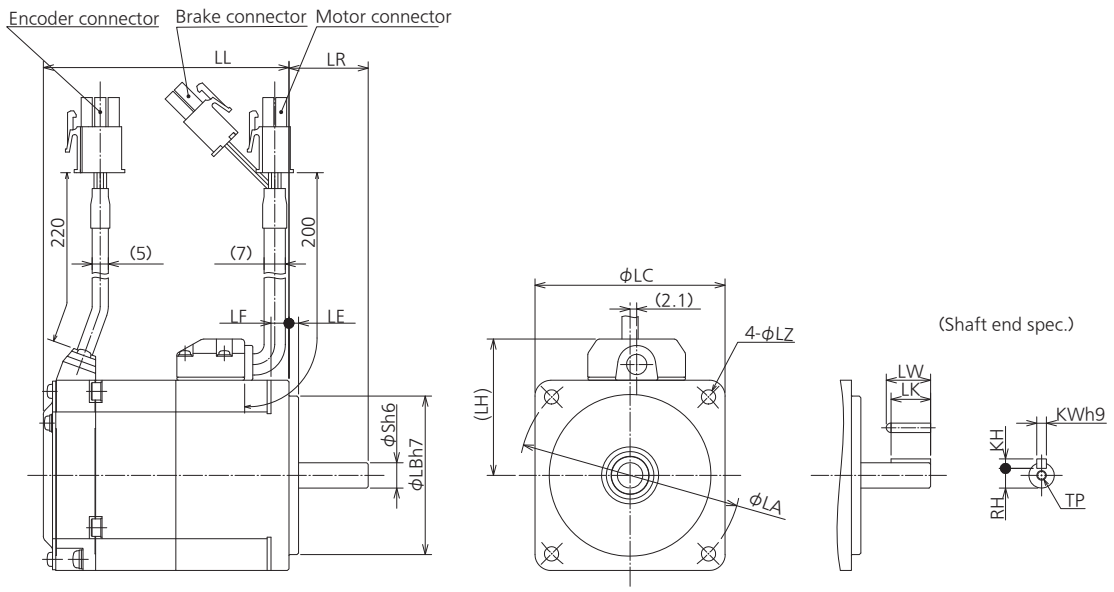

* Dimensions are subject to change without notice. Contact us or a dealer for the latest information.

[Unit: mm]

MQMF series (Middle inertia)					
Motor output			100 W	200 W	400 W
Motor model		MQMF	01□L1□2	02□L1□2	04□L1□2
LL	Without oil seal	Without brake	56.2	62.3	74.8
		With brake	77.5	85.9	98.4
	With oil seal	Without brake	59.7	65.8	78.3
		With brake	81	89.4	101.9
LR			25	30	
S			8	11	14
LA			70	90	
LB			50	70	
LC			60	80	
LE			3		
LF			5.7	8	
LH			43	53	
LZ			4.5	6	
Key way dimensions	LW		14	20	25
	LK		12.5	18	22.5
	KW		3	4	5
	KH		3	4	5
	RH		6.2	8.5	11
	TP		M3 depth 6	M4 depth 8	M5 depth 10
Mass (kg)	Without oil seal	Without brake	0.54	1.1	1.5
		With brake	0.79	1.5	2.0
	With oil seal	Without brake	0.57	1.2	1.6
		With brake	0.82	1.6	2.1
Connector specifications			Refer to P.2-56 “Specifications of Motor connector”		

Caution Reduce the moment of inertia ratio if high speed response operation is required.

Related page
- P.1-29 “Check of the Model”
- P.1-34 “Check of the Combination of the Driver and the Motor”
- P.7-61 “S-T Characteristics”

MQMF 100 W to 400 W(Connector type)

[Unit: mm]

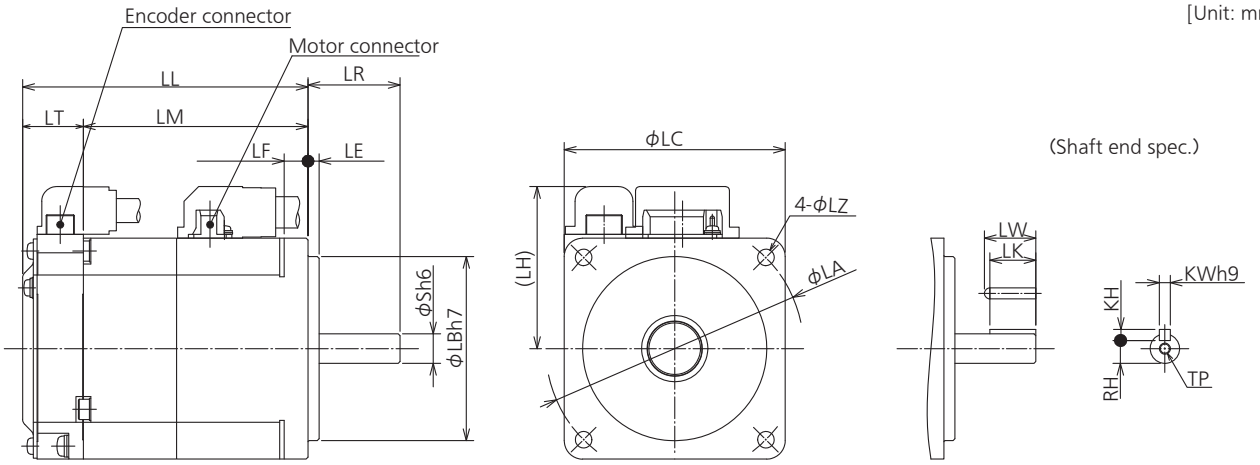

* Dimensions are subject to change without notice. Contact us or a dealer for the latest information.

[Unit: mm]

MQMF series (Middle inertia)					
Motor output			100 W	200 W	400 W
Motor model		MQMF	01□L1□1	02□L1□1	04□L1□1
LL	Without oil seal	Without brake	56.2	62.3	74.8
		With brake	77.5	85.9	98.4
	With oil seal	Without brake	59.7	65.8	78.3
		With brake	81	89.4	101.9
LR			25	30	
S			8	11	14
LA			70	90	
LB			50	70	
LC			60	80	
LE			3		
LF			5.7	8	
LH			44	54	
LM	Without oil seal	Without brake	39.7	45.8	58.3
		With brake	61	69.4	81.9
	With oil seal	Without brake	43.2	49.3	61.8
		With brake	64.5	72.9	85.4
LT			16.5		
LZ			4.5	6	
Key way dimensions	LW		14	20	25
	LK		12.5	18	22.5
	KW		3	4	5
	KH		3	4	5
	RH		6.2	8.5	11
	TP		M3 depth 6	M4 depth 8	M5 depth 10
Mass (kg)	Without oil seal	Without brake	0.54	1.1	1.5
		With brake	0.79	1.5	2.0
	With oil seal	Without brake	0.57	1.2	1.6
		With brake	0.82	1.6	2.1
Connector specifications			Refer to P.2-56 “Specifications of Motor connector”		

Caution Reduce the moment of inertia ratio if high speed response operation is required.

Related page
• P.1-29 “Check of the Model” • P.1-34 “Check of the Combination of the Driver and the Motor”
• P.7-61 “S-T Characteristics”

MQMF 100 W to 400 W(Leadwire type,with oil seal(with protect lip))

[Unit: mm]

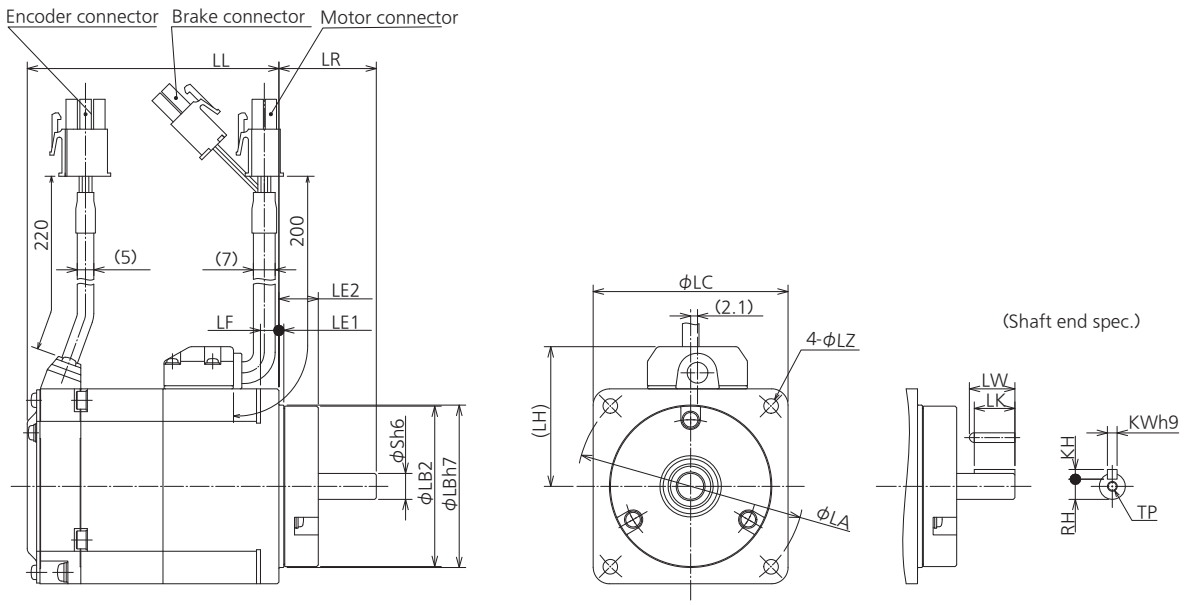

* Dimensions are subject to change without notice. Contact us or a dealer for the latest information.

[Unit: mm]

MQMF series (Middle inertia)					
Motor output			100 W	200 W	400 W
Motor model		MQMF	01□L1□4	02□L1□4	04□L1□4
LL	With oil seal (With protect lip)	Without brake	56.2	62.3	74.8
		With brake	77.5	85.9	98.4
LR			30	35	
S			8	11	14
LA			70	90	
LB1			50	70	
LB2			49.4	69.4	
LC			60	80	
LE1			1.5		
LE2			12.1		
LF			5.7	8	
LH			43	53	
LZ			4.5	6	
Key way dimensions	LW		14	20	20.5
	LK		12.5	18	18
	KW		3	4	5
	KH		3	4	5
	RH		6.2	8.5	11
	TP		M3 depth 6	M4 depth 8	M5 depth 10
Mass (kg)		Without brake	0.57	1.2	1.6
		With brake	0.82	1.6	2.1
Connector specifications			Refer to P.2-56 “Specifications of Motor connector”		

Caution Reduce the moment of inertia ratio if high speed response operation is required.

Related page
- P.1-29 “Check of the Model”
- P.1-34 “Check of the Combination of the Driver and the Motor”
- P.7-61 “S-T Characteristics”

MQMF 100 W to 400 W(Leadwire type,with oil seal(with protect lip))

[Unit: mm]

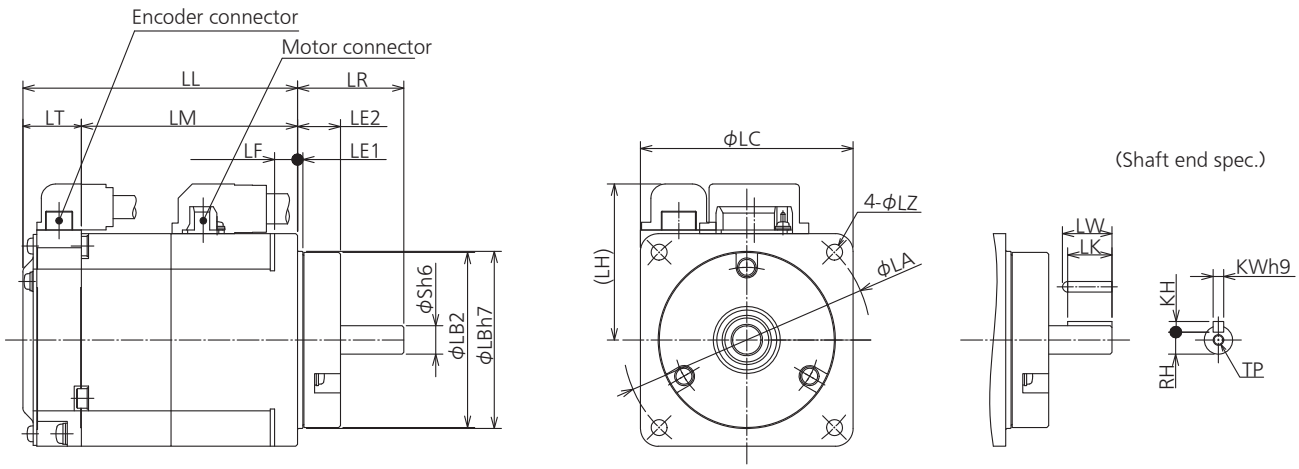

* Dimensions are subject to change without notice. Contact us or a dealer for the latest information.

[Unit: mm]

MQMF series (Middle inertia)					
Motor output			100 W	200 W	400 W
Motor model		MQMF	01□L1□3	02□L1□3	04□L1□3
LL	With oil seal (With protect lip)	Without brake	56.2	62.3	74.8
		With brake	77.5	85.9	98.4
LR			30	35	
S			8	11	14
LA			70	90	
LB1			50	70	
LB2			49.4	69.4	
LC			60	80	
LE1			1.5		
LE2			12.1		
LF			5.7	8	
LH			44	54	
LM		Without brake	39.7	45.8	58.3
		With brake	61	69.4	81.9
LT			16.5		
LZ			4.5	6	
Key way dimensions	LW		14	20	20.5
	LK		12.5	18	18
	KW		3	4	5
	KH		3	4	5
	RH		6.2	8.5	11
	TP		M3 depth 6	M4 depth 8	M5 depth 10
Mass (kg)		Without brake	0.57	1.2	1.6
		With brake	0.82	1.6	2.1
Connector specifications			Refer to P.2-56 “Specifications of Motor connector”		

Caution Reduce the moment of inertia ratio if high speed response operation is required.

Related page
- P.1-29 “Check of the Model”
- P.1-34 “Check of the Combination of the Driver and the Motor”
- P.7-61 “S-T Characteristics”

MDMF 1.0 kW to 5.0 kW(Encoder connector type JN2)

[Unit: mm]

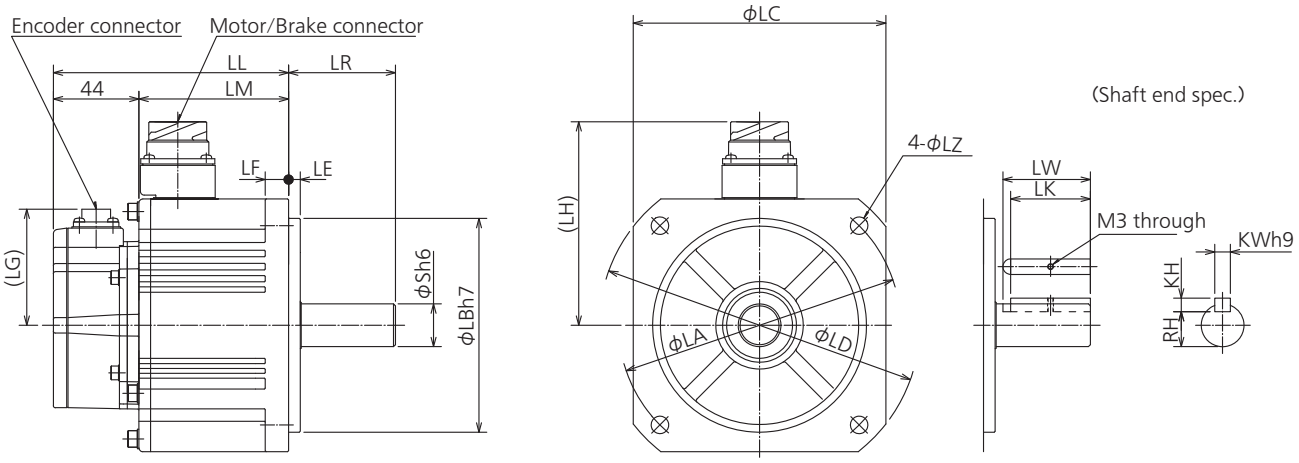

* Dimensions are subject to change without notice. Contact us or a dealer for the latest information.

[Unit: mm]

MDMF series (Middle inertia)							
Motor output		1.0 kW	1.5 kW	2.0 kW	3.0 kW	4.0 kW	5.0 kW
Motor model	MDMF	102L1□□	152L1□□	202L1□□	302L1□□	402L1□□	502L1□□
LL	Without brake	121	135	149	177	160	175
	With brake	149	163	177	205	189	204
LR		55			65	70	
S		22			24	35	
LA		145				200	
LB		110				114.3	
LC		130				176	
LD		165				233	
LE		6				3.2	
LF		12				18	
LG		60					
LH	Without brake	105			118	140	
	With brake	116			118	140	
LM	Without brake	77	91	105	133	116	131
	With brake	105	119	133	161	145	160
LZ		9				13.5	
Key way dimensions	LW	45			55		
	LK	41			51	50	
	KW	8				10	
	KH	7				8	
	RH	18			20	30	
Mass (kg)	Without brake	4.6	5.7	6.9	9.3	13.4	15.6
	With brake	6.1	7.2	8.4	10.9	16.8	19.0
Connector specifications		Refer to P.2-56 “Specifications of Motor connector”					

Caution Reduce the moment of inertia ratio if high speed response operation is required.

Related page
- P.1-29 “Check of the Model”
- P.1-34 “Check of the Combination of the Driver and the Motor”
- P.7-61 “S-T Characteristics”

MDMF 1.0 kW to 5.0 kW(Encoder connector type JL10)

[Unit: mm]

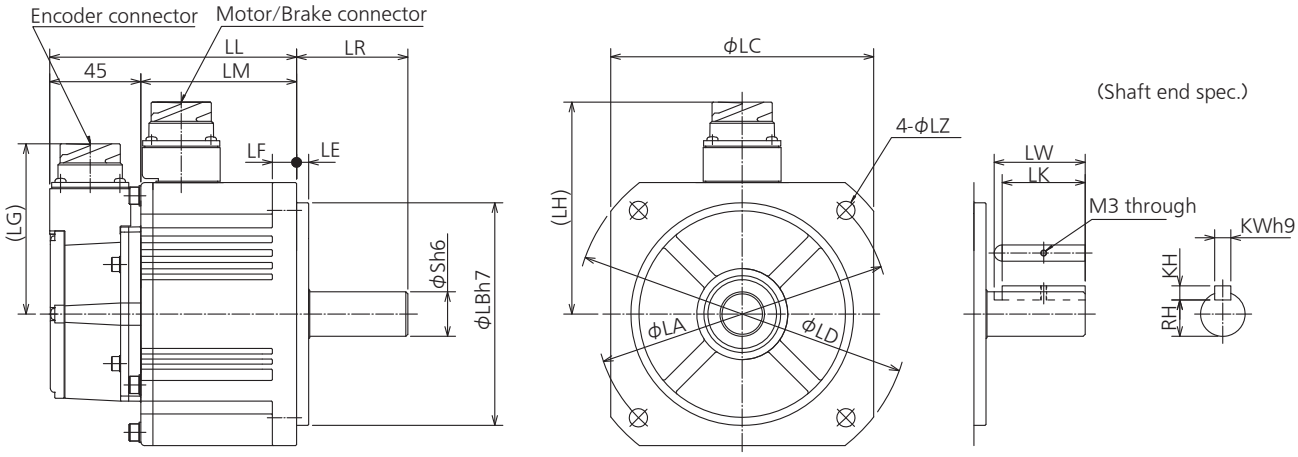

* Dimensions are subject to change without notice. Contact us or a dealer for the latest information.

[Unit: mm]

MDMF series (Middle inertia)							
Motor output		1.0 kW	1.5 kW	2.0 kW	3.0 kW	4.0 kW	5.0 kW
Motor model	MDMF	102L1□□	152L1□□	202L1□□	302L1□□	402L1□□	502L1□□
LL	Without brake	122	136	150	178	161	176
	With brake	150	164	178	206	190	205
LR		55			65	70	
S		22			24	35	
LA		145				200	
LB		110				114.3	
LC		130				176	
LD		165				233	
LE		6				3.2	
LF		12				18	
LG		84					
LH	Without brake	105			118	140	
	With brake	116			118	140	
LM	Without brake	77	91	105	133	116	131
	With brake	105	119	133	161	145	160
LZ		9				13.5	
Key way dimensions	LW	45			55		
	LK	41			51	50	
	KW	8				10	
	KH	7				8	
	RH	18			20	30	
Mass (kg)	Without brake	4.6	5.7	6.9	9.3	13.4	15.6
	With brake	6.1	7.2	8.4	10.9	16.8	19.0
Connector specifications		Refer to P.2-56 "Specifications of Motor connector"					

Caution Reduce the moment of inertia ratio if high speed response operation is required.

Related page
- P.1-29 "Check of the Model"
- P.1-34 "Check of the Combination of the Driver and the Motor"
- P.7-61 "S-T Characteristics"

MDMF 7.5 kW (Without brake Encoder connector type JN2)

[Unit: mm]

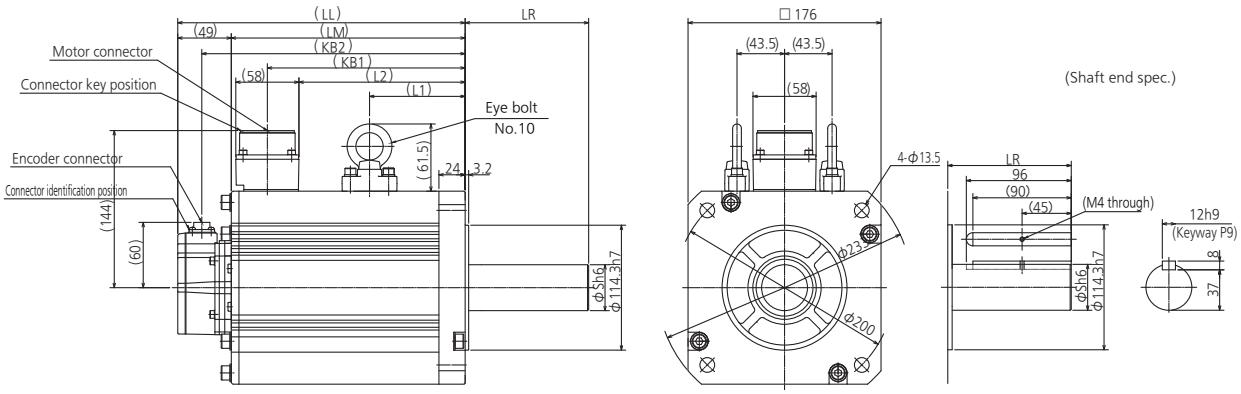

* Dimensions are subject to change. Further confirmation for dimension is required when using for design.

[Unit : mm]

MDMF series (Middle inertia)									
Motor model	Rated output	LL	LR	LM	S	KB1	KB2	L1	L2
MDMF752L1□□	7.5	263	113	214	42	181	241	87.5	152

MDMF 7.5 kW (With brake Encoder connector type JN2)

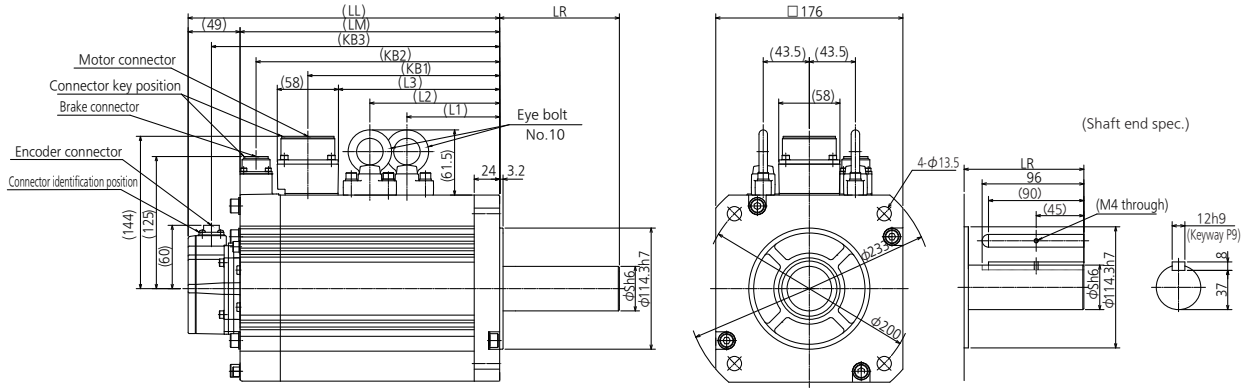

* Dimensions are subject to change. Further confirmation for dimension is required when using for design.

[Unit : mm]

MDMF series (Middle inertia)											
Motor model	Rated output	LL	LR	LM	S	KB1	KB2	KB3	L1	L2	L3
MDMF752L1□□	7.5	294	113	245	42	181	230	272	87.5	122.5	152

Caution Reduce the moment of inertia ratio if high speed response operation is required.

Related page
- P.1-29 “Check of the Model”
- P.1-34 “Check of the Combination of the Driver and the Motor”
- P.7-61 “S-T Characteristics”

MDMF 7.5 kW (Without brake Encoder connector type JL10)

[Unit: mm]

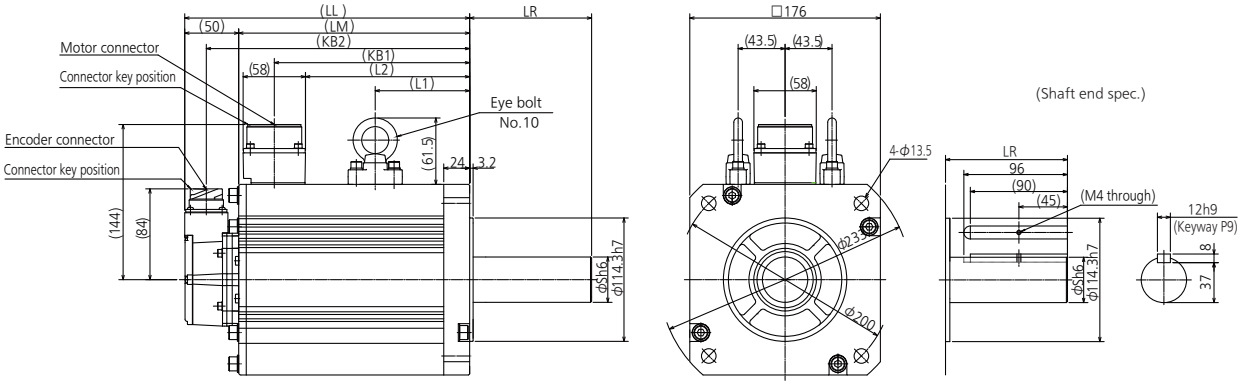

* Dimensions are subject to change. Further confirmation for dimension is required when using for design.

[Unit : mm]

MDMF series (Middle inertia)									
Motor model	Rated output	LL	LR	LM	S	KB1	KB2	L1	L2
MDMF752L1□□	7.5	264	113	214	42	181	244	87.5	152

MDMF 7.5 kW (With brake Encoder connector type JL10)

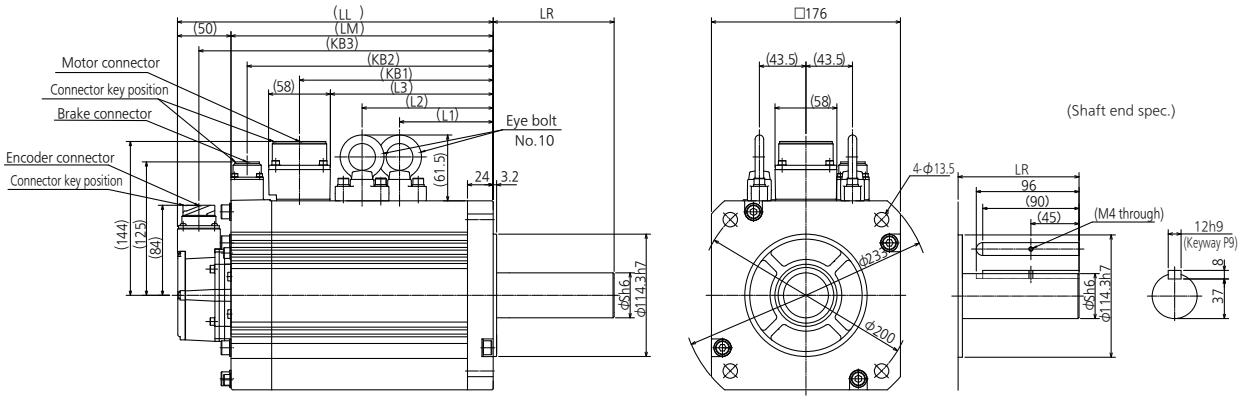

* Dimensions are subject to change. Further confirmation for dimension is required when using for design.

[Unit : mm]

MDMF series (Middle inertia)											
Motor model	Rated output	LL	LR	LM	S	KB1	KB2	KB3	L1	L2	L3
MDMF752L1□□	7.5	295	113	245	42	181	230	275	87.5	122.5	152

Caution Reduce the moment of inertia ratio if high speed response operation is required.

Related page
- P.1-29 "Check of the Model"
- P.1-34 "Check of the Combination of the Driver and the Motor"
- P.7-61 "S-T Characteristics"

MDMF 11.0 kW to 15.0 kW (Without brake Encoder connector type JN2)

[Unit: mm]

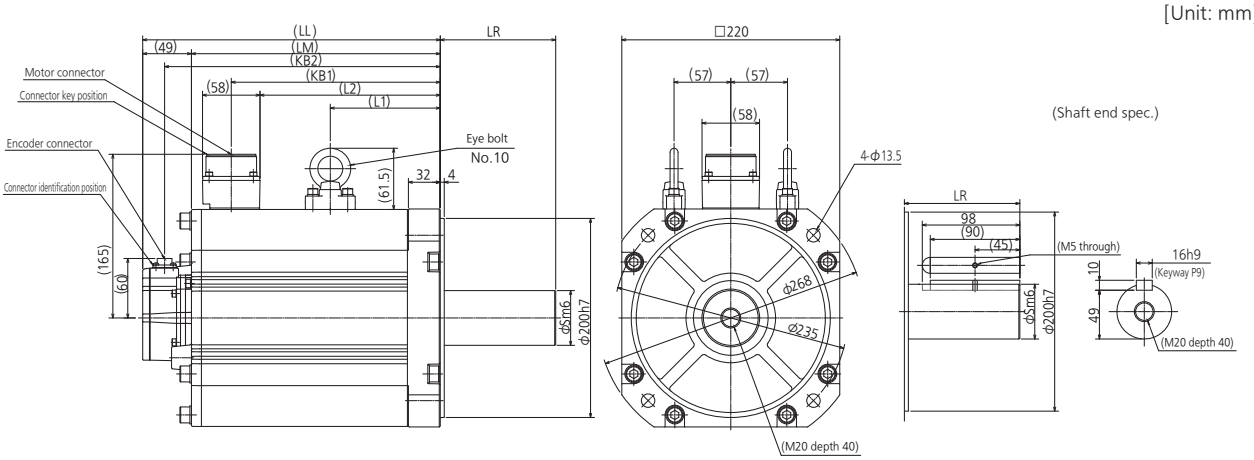

* Dimensions are subject to change. Further confirmation for dimension is required when using for design.

[Unit : mm]

MDMF series (Middle inertia)									
Motor model	Rated output	LL	LR	LM	S	KB1	KB2	L1	L2
MDMFC12L1□□	11.0	299	116	250	55	210	277	110.5	181
MDMFC52L1□□	15.0	347	116	298	55	258	325	130	229

MDMF 11.0 kW to 15.0 kW (With brake Encoder connector type JN2)

[Unit: mm]

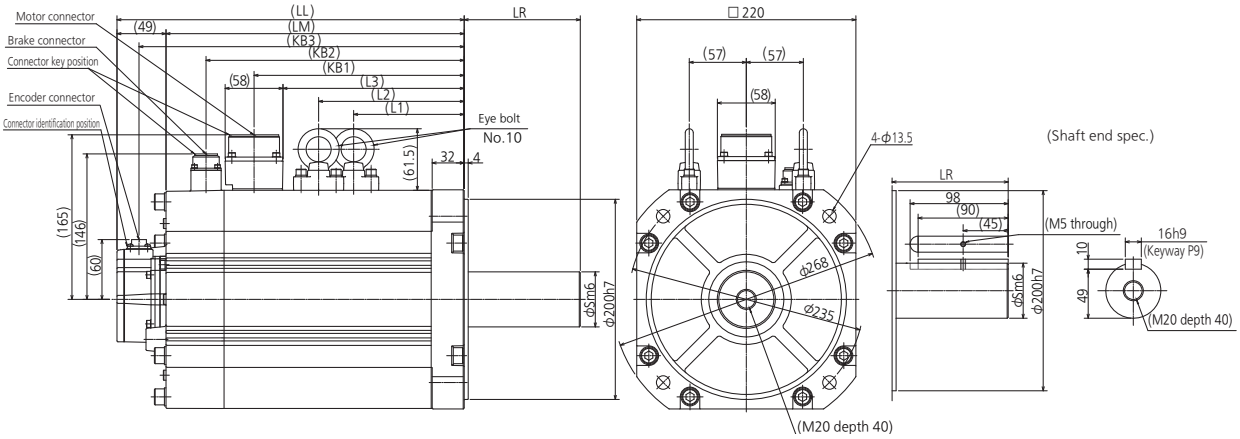

* Dimensions are subject to change. Further confirmation for dimension is required when using for design.

[Unit : mm]

MDMF series (Middle inertia)											
Motor model	Rated output	LL	LR	LM	S	KB1	KB2	KB3	L1	L2	L3
MDMFC12L1□□	11.0	347	116	298	55	210	258	325	110.5	145.5	181
MDMFC52L1□□	15.0	395	116	346	55	258	306	373	130	165	229

Caution Reduce the moment of inertia ratio if high speed response operation is required.

Related page
- P.1-29 "Check of the Model"
- P.1-34 "Check of the Combination of the Driver and the Motor"
- P.7-61 "S-T Characteristics"

MDMF 11.0 kW to 15.0 kW (Without brake Encoder connector type JL10)

[Unit: mm]

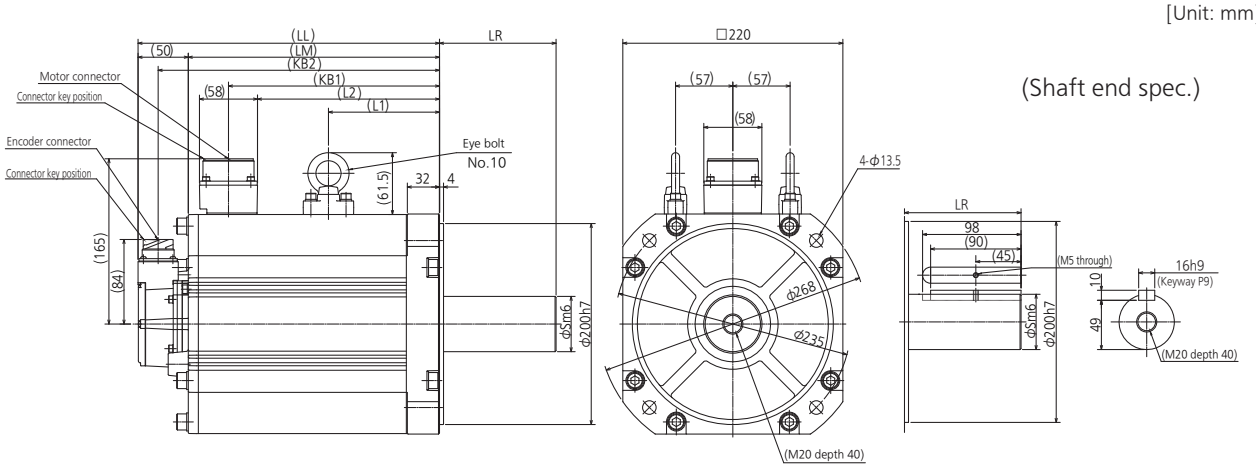

* Dimensions are subject to change. Further confirmation for dimension is required when using for design.

[Unit : mm]

MDMF series (Middle inertia)									
Motor model	Rated output	LL	LR	LM	S	KB1	KB2	L1	L2
MDMFC12L1□□	11.0	300	116	250	55	210	280	110.5	181
MDMFC52L1□□	15.0	348	116	298	55	258	328	130	229

MDMF 11.0 kW to 15.0 kW (With brake Encoder connector type JL10)

[Unit: mm]

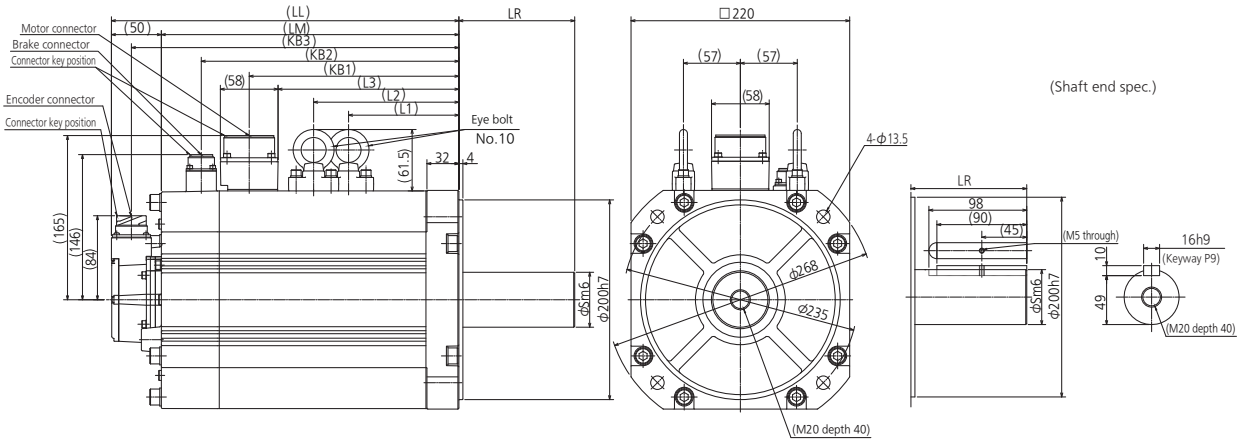

* Dimensions are subject to change. Further confirmation for dimension is required when using for design.

[Unit : mm]

MDMF series (Middle inertia)											
Motor model	Rated output	LL	LR	LM	S	KB1	KB2	KB3	L1	L2	L3
MDMFC12L1□□	11.0	348	116	298	55	210	258	328	110.5	145.5	181
MDMFC52L1□□	15.0	396	116	346	55	258	306	376	130	165	229

Caution Reduce the moment of inertia ratio if high speed response operation is required.

Related page
- P.1-29 "Check of the Model"
- P.1-34 "Check of the Combination of the Driver and the Motor"
- P.7-61 "S-T Characteristics"

MDMF 22.0 kW (Without brake Encoder connector type JN2)

[Unit: mm]

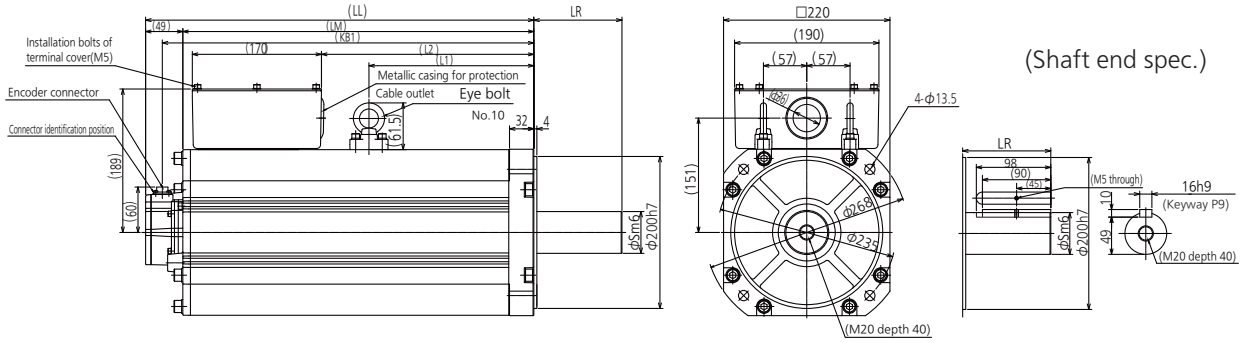

* Dimensions are subject to change. Further confirmation for dimension is required when using for design.

[Unit : mm]

MDMF series (Middle inertia)								
Motor model	Rated output	LL	LR	LM	S	KB1	L1	L2
MDMFD22L1□□	22.0	511	116	462	55	489	217	279.5

MDMF 22.0 kW (With brake Encoder connector type JN2)

[Unit: mm]

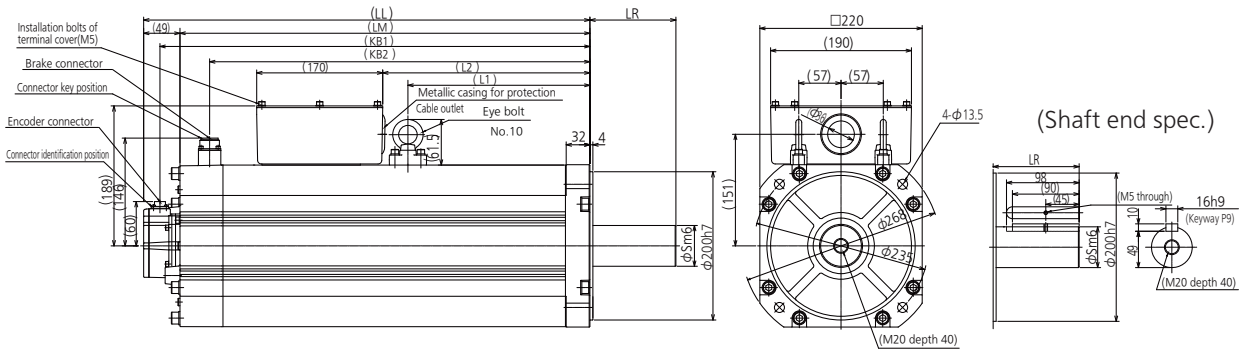

* Dimensions are subject to change. Further confirmation for dimension is required when using for design.

[Unit : mm]

MDMF series (Middle inertia)									
Motor model	Rated output	LL	LR	LM	S	KB1	KB2	L1	L2
MDMFD22L1□□	22.0	602	116	553	55	580	513	245.5	279.5

Caution Reduce the moment of inertia ratio if high speed response operation is required.

Related page
- P.1-29 "Check of the Model"
- P.1-34 "Check of the Combination of the Driver and the Motor"
- P.7-61 "S-T Characteristics"

MDMF 22.0 kW (Without brake Encoder connector type JL10)

[Unit: mm]

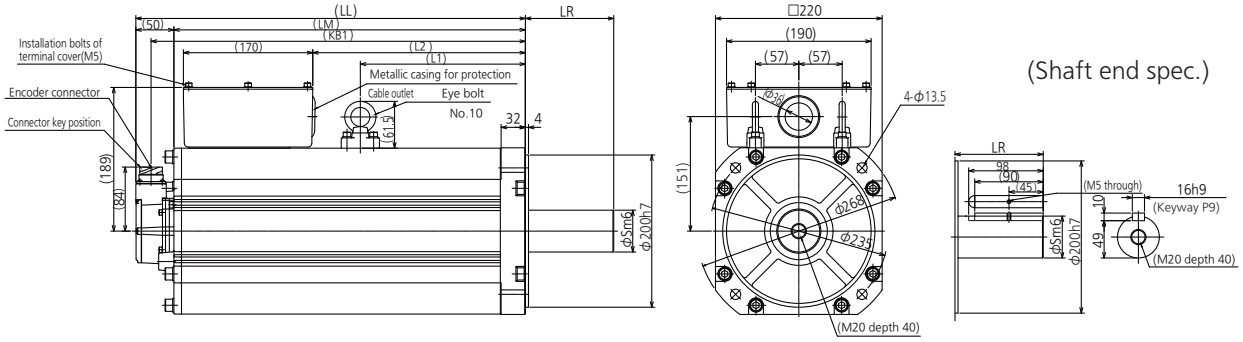

* Dimensions are subject to change. Further confirmation for dimension is required when using for design.

[Unit : mm]

MDMF series (Middle inertia)								
Motor model	Rated output	LL	LR	LM	S	KB1	L1	L2
MDMFD22L1□□	22.0	512	116	462	55	492	217	279.5

MDMF 22.0 kW (With brake Encoder connector type JL10)

[Unit: mm]

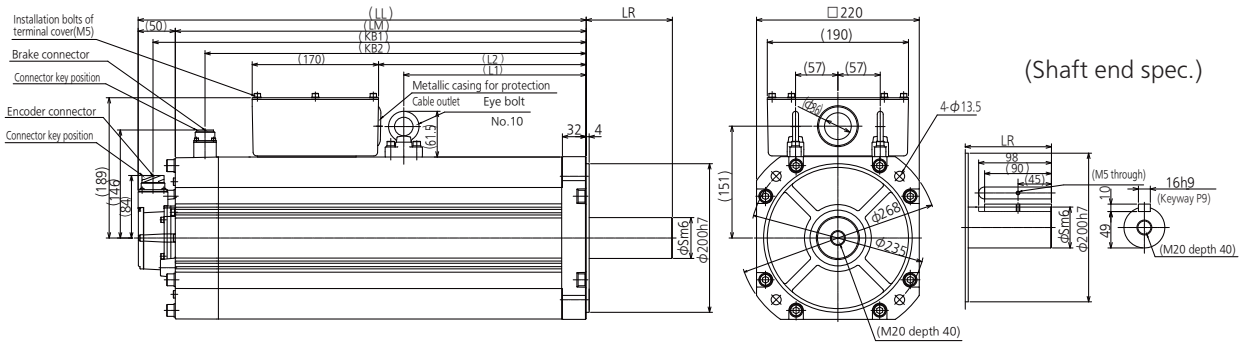

* Dimensions are subject to change. Further confirmation for dimension is required when using for design.

[Unit : mm]

MDMF series (Middle inertia)									
Motor model	Rated output	LL	LR	LM	S	KB1	KB2	L1	L2
MDMFD22L1□□	22.0	603	116	553	55	583	513	245.5	279.5

Caution Reduce the moment of inertia ratio if high speed response operation is required.

Related page
- P.1-29 "Check of the Model"
- P.1-34 "Check of the Combination of the Driver and the Motor"
- P.7-61 "S-T Characteristics"

MDMF 1.0 kW to 5.0 kW(400 V)

[Unit: mm]

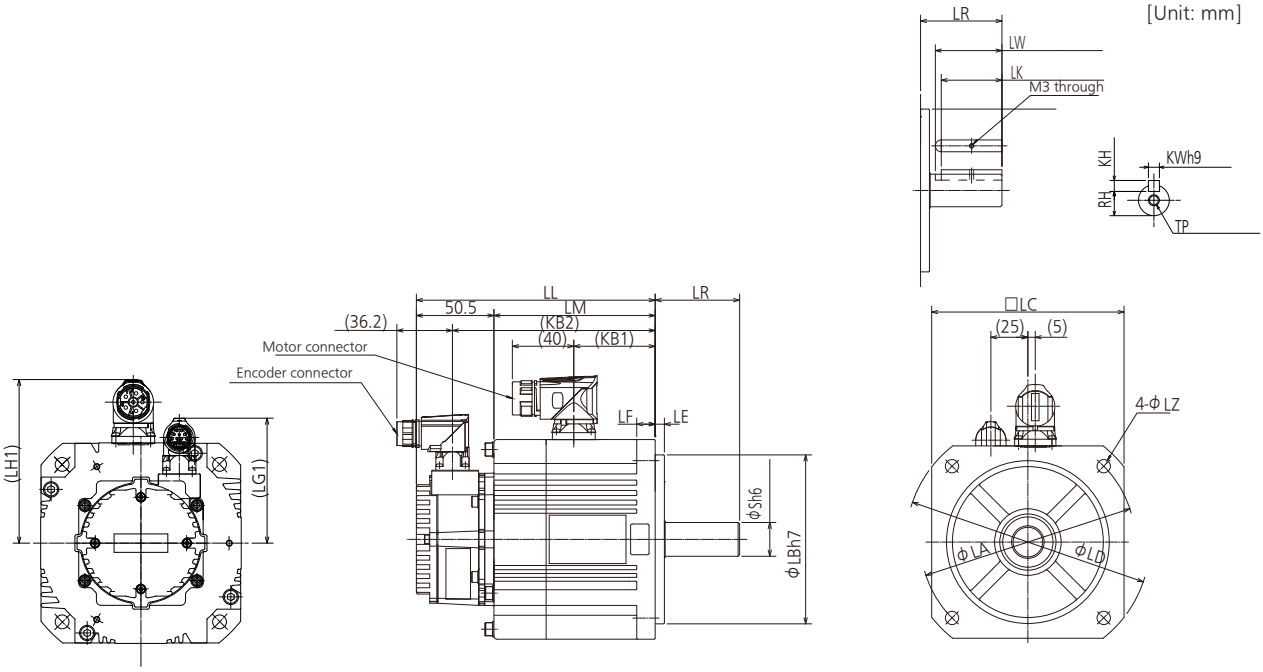

* Dimensions are subject to change. Further confirmation for dimension is required when using for design.

[Unit : mm]

MDMF series (Middle inertia)							
Motor output		1.0 kW	1.5 kW	2.0 kW	3.0 kW	4.0 kW	5.0 kW
Motor model	MDMF	104L1□□M	154L1□□M	204L1□□M	304L1□□M	404L1□□M	504L1□□M
LL	Without brake	121	135	149	177	163	178
	With brake	149	163	177	205	192	207
LR		55			65	70	
S		22			24	35	
LA		145				200	
LB		110				114.3	
LC		130				176	
LD		165				233	
LE		6				3.2	
LF		12				18	
LH1		106.5				129.8	
LG1		81.3					
LM	Without brake	77	91	105	133	119	134
	With brake	105	119	133	161	148	163
KB1		53	67	81	109	94	109
KB2	Without brake	104	118	132	160	146	161
	With brake	132	146	160	188	175	190
LZ		9				13.5	
Key way dimensions	LW	45			55		
	LK	41			51	50	
	KW	8				10	
	KH	7				8	
	RH	18			20	30	
Mass (kg)	Without brake	4.6	5.7	6.9	9.3	13.4	15.6
	With brake	6.1	7.2	8.4	10.9	16.8	19.0
Connector specifications		Refer to P.2-56 "Specifications of Motor connector"					

Caution Reduce the moment of inertia ratio if high speed response operation is required.

Related page
- P.1-29 "Check of the Model"
- P.1-34 "Check of the Combination of the Driver and the Motor"
- P.7-61 "S-T Characteristics"

Note (1) 400 V specification motors are not sold in Japan.
In addition, 400 V specification motors purchased outside Japan and equipment equipped with 400 V specification motors cannot be brought into Japan.

MGMF 0.85kW to 4.4kW(Encoder connector type JN2)

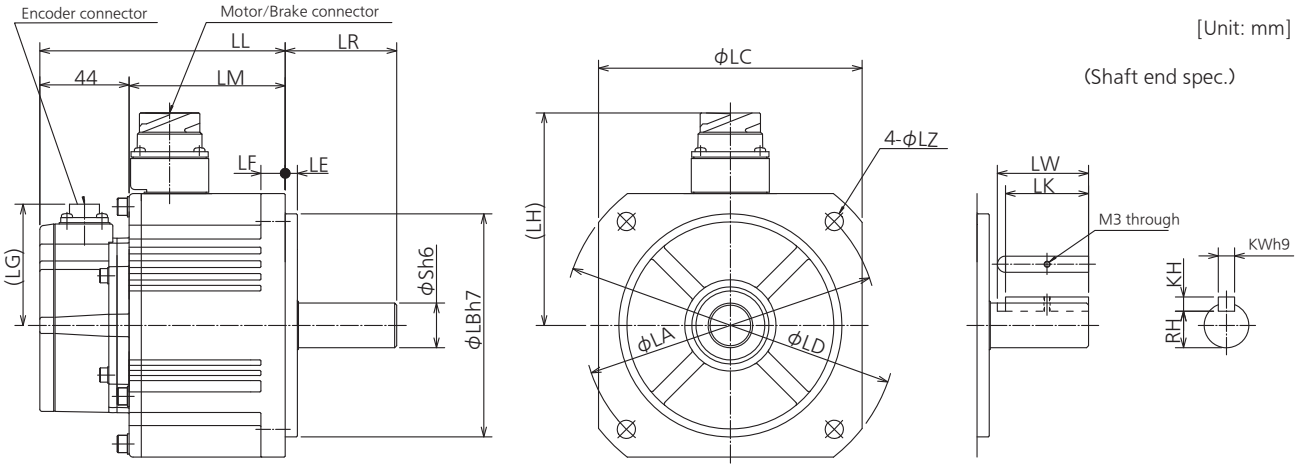

* Dimensions are subject to change without notice. Contact us or a dealer for the latest information.

[Unit: mm]

MGMF series (Low inertia)							
Motor output		0.85 kW	1.3 kW	1.8 kW	2.4 kW	2.9 kW	4.4kW
Motor model	MGMF	092L1□□	132L1□□	182L1□□	242L1□□	292L1□□	442L1□□
LL	Without brake	121	135	149	160		175
	With brake	149	163	177	189		204
LR		55			70		
S		22			35		
LA		145			200		
LB		110			114.3		
LC		130			176		
LD		165			233		
LE		6			3.2		
LF		12			18		
LG		60					
LH	Without brake	105			140		
	With brake	116			140		
LM	Without brake	77	91	105	116		131
	With brake	105	119	133	145		160
LZ		9			13.5		
Key way dimensions	LW	45			55		
	LK	41			50		
	KW	8			10		
	KH	7			8		
	RH	18			30		
Mass (kg)	Without brake	4.6	5.7	6.9	13.4		15.6
	With brake	6.1	7.5	8.4	16.8		19.0
Connector specifications		Refer to P.2-56 “Specifications of Motor connector”					

Caution Reduce the moment of inertia ratio if high speed response operation is required.

Related page
- P.1-29 “Check of the Model”
- P.1-34 “Check of the Combination of the Driver and the Motor”
- P.7-61 “S-T Characteristics”

MGMF 0.85kW to 4.4kW(Encoder connector type JL10)

[Unit: mm]

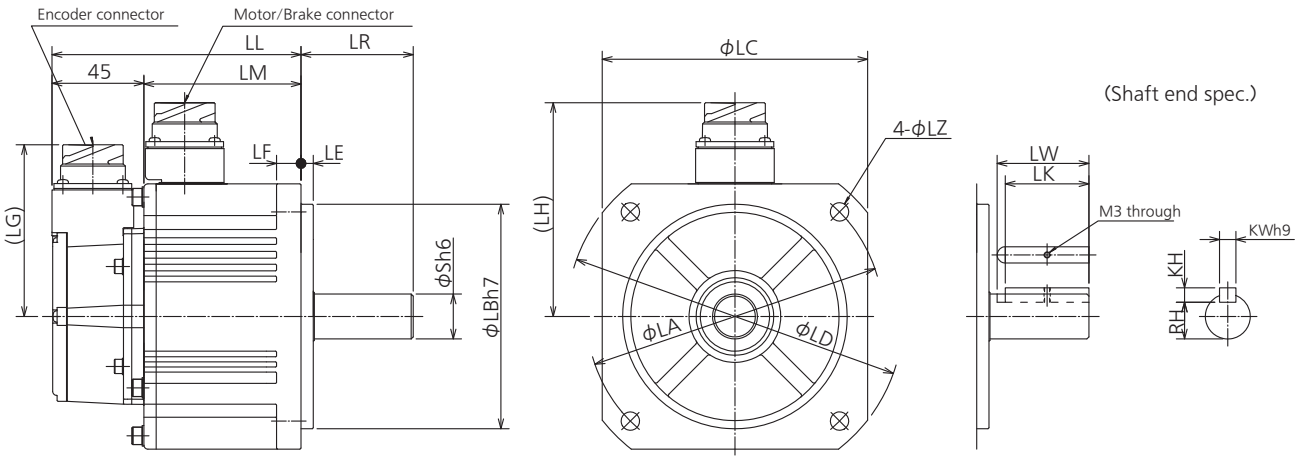

* Dimensions are subject to change without notice. Contact us or a dealer for the latest information.

[Unit: mm]

MGMF series (Low inertia)							
Motor output		0.85 kW	1.3 kW	1.8 kW	2.4 kW	2.9 kW	4.4kW
Motor model	MGMF	092L1□□	132L1□□	182L1□□	242L1□□	292L1□□	442L1□□
LL	Without brake	122	136	150	161		176
	With brake	150	164	178	190		205
LR		55			70		
S		22			35		
LA		145			200		
LB		110			114.3		
LC		130			176		
LD		165			233		
LE		6			3.2		
LF		12			18		
LG		84					
LH	Without brake	105			140		
	With brake	116			140		
LM	Without brake	77	91	105	116		131
	With brake	105	119	133	145		160
LZ		9			13.5		
Key way dimensions	LW	45			55		
	LK	41			50		
	KW	8			10		
	KH	7			8		
	RH	18			30		
Mass (kg)	Without brake	4.6	5.7	6.9	13.4		15.6
	With brake	6.1	7.5	8.4	16.8		19.0
Connector specifications		Refer to P.2-56 “Specifications of Motor connector”					

Caution Reduce the moment of inertia ratio if high speed response operation is required.

Related page
- P.1-29 “Check of the Model”
- P.1-34 “Check of the Combination of the Driver and the Motor”
- P.7-61 “S-T Characteristics”

MGMF 5.5 kW (Without brake Encoder connector type JN2)

[Unit: mm]

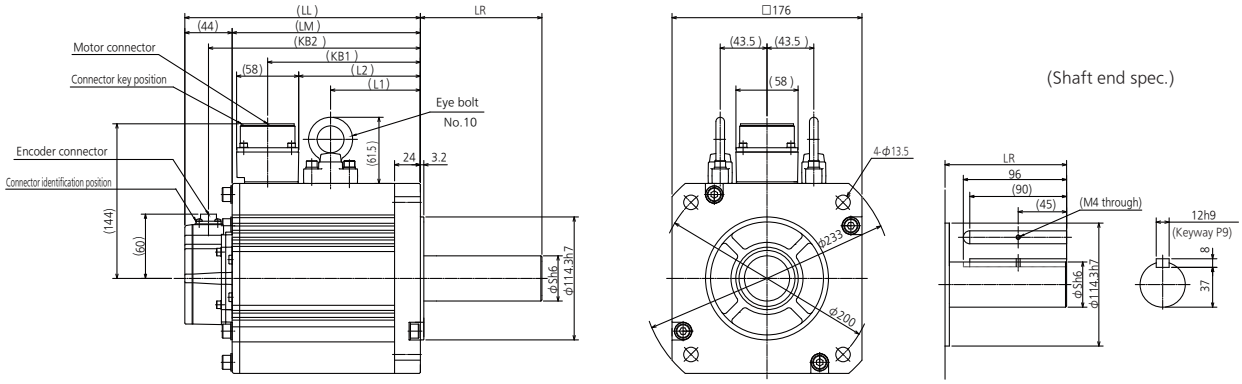

* Dimensions are subject to change. Further confirmation for dimension is required when using for design.

[Unit : mm]

MGMF series (Low inertia)									
Motor model	Rated output	LL	LR	LM	S	KB1	KB2	L1	L2
MGMF552L1□□	5.5	219	113	175	42	142	197	83.5	113

MGMF 5.5 kW (With brake Encoder connector type JN2)

[Unit: mm]

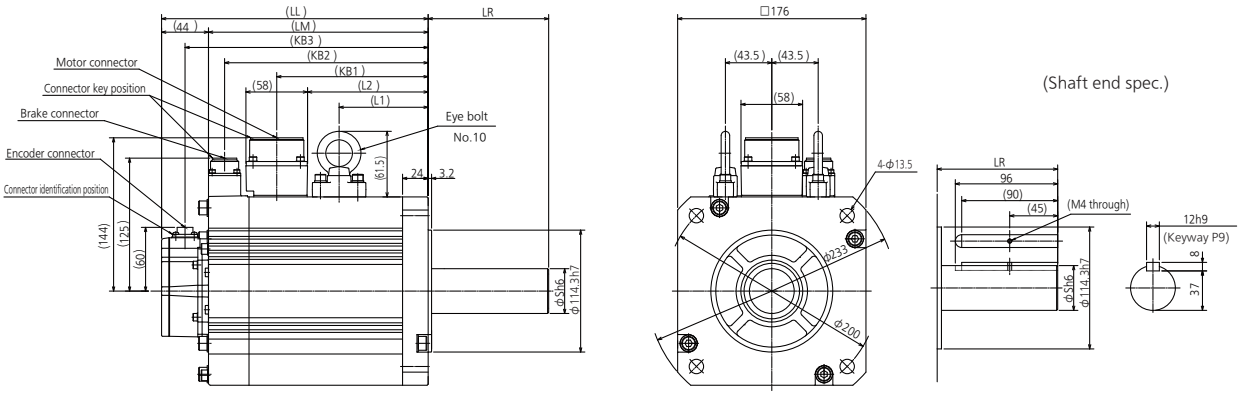

* Dimensions are subject to change. Further confirmation for dimension is required when using for design.

[Unit : mm]

MGMF series (Low inertia)										
Motor model	Rated output	LL	LR	LM	S	KB1	KB2	KB3	L1	L2
MGMF552L1□□	5.5	250	113	206	42	142	191	228	83.5	113

Caution Reduce the moment of inertia ratio if high speed response operation is required.

Related page
- P.1-29 "Check of the Model"
- P.1-34 "Check of the Combination of the Driver and the Motor"
- P.7-61 "S-T Characteristics"

MGMF 5.5 kW (Without brake Encoder connector type JL10)

[Unit: mm]

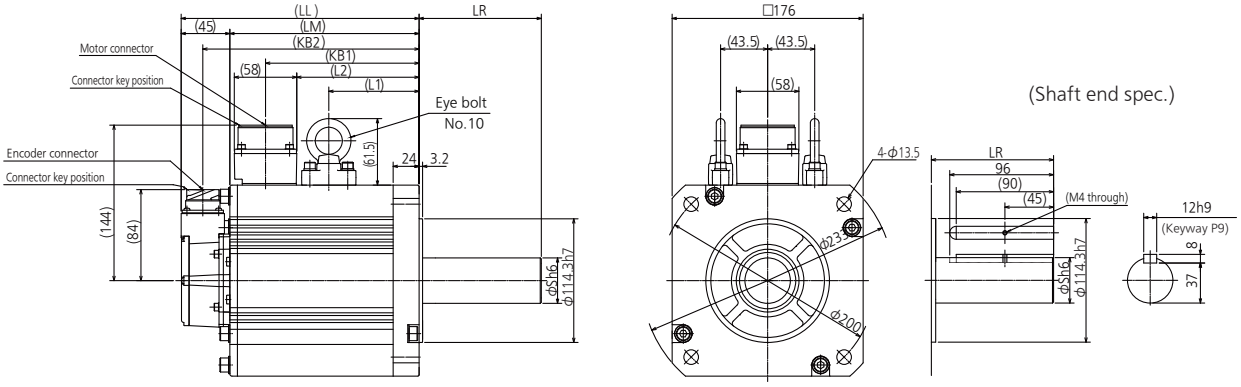

* Dimensions are subject to change. Further confirmation for dimension is required when using for design.

[Unit : mm]

MGMF series (Low inertia)									
Motor model	Rated output	LL	LR	LM	S	KB1	KB2	L1	L2
MGMF552L1□□	5.5	220	113	175	42	142	200	83.5	113

MGMF 5.5 kW (With brake Encoder connector type JL10)

[Unit: mm]

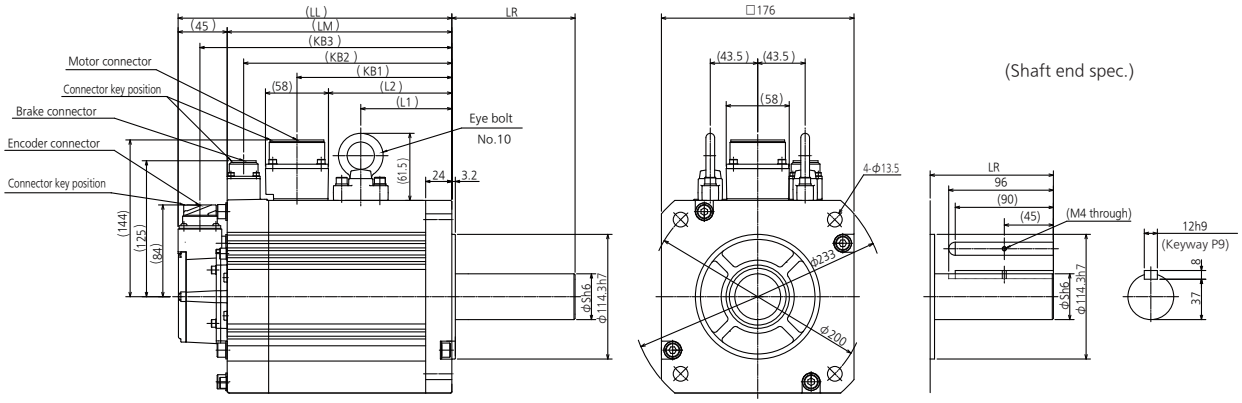

* Dimensions are subject to change. Further confirmation for dimension is required when using for design.

[Unit : mm]

MGMF series (Low inertia)										
Motor model	Rated output	LL	LR	LM	S	KB1	KB2	KB3	L1	L2
MGMF552L1□□	5.5	251	113	206	42	142	191	231	83.5	113

Caution Reduce the moment of inertia ratio if high speed response operation is required.

Related page
- P.1-29 "Check of the Model"
- P.1-34 "Check of the Combination of the Driver and the Motor"
- P.7-61 "S-T Characteristics"

MGMF 0.85 kW to 4.4 kW(400 V)

[Unit: mm]

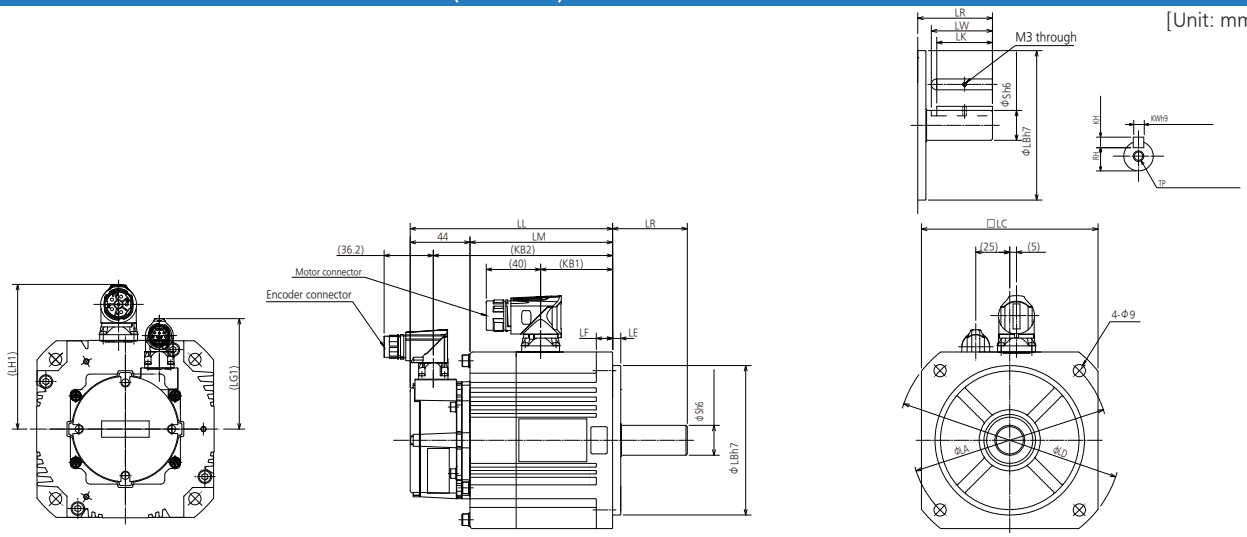

* Dimensions are subject to change. Further confirmation for dimension is required when using for design.

[Unit : mm]

MGMF series (Low inertia)							
Motor output		0.85 kW	1.3 kW	1.8 kW	2.4 kW	2.9 kW	4.4kW
Motor model	MGMF	094L1□□M	134L1□□M	184L1□□M	244L1□□M	294L1□□M	444L1□□M
LL	Without brake	121	135	149	163		178
	With brake	149	163	177	192		207
LR		55			70		
S		22			35		
LA		145			200		
LB		110			114.3		
LC		130			176		
LD		165			233		
LE		6			3.2		
LF		12			18		
LH1		106.5			129.8		
LG1		81.3					
LM	Without brake	77	91	105	119		134
	With brake	105	119	133	148		163
KB1		53	67	81	94		109
KB2	Without brake	104	118	132	146		161
	With brake	132	146	160	175		190
LZ		9			13.5		
Key way dimensions	LW	45			55		
	LK	41			50		
	KW	8			10		
	KH	7			8		
	RH	18			30		
Mass (kg)	Without brake	4.6	5.7	6.9	13.4		15.6
	With brake	6.1	7.5	8.4	16.8		19.0
Connector specifications		Refer to P.2-56 "Specifications of Motor connector"					

Caution Reduce the moment of inertia ratio if high speed response operation is required.

Related page
- P.1-29 "Check of the Model"
- P.1-34 "Check of the Combination of the Driver and the Motor"
- P.7-61 "S-T Characteristics"

Note (1) 400 V specification motors are not sold in Japan.
In addition, 400 V specification motors purchased outside Japan and equipment equipped with 400 V specification motors cannot be brought into Japan.

MHMF 50 W to 100 W(Leadwire type)

[Unit: mm]

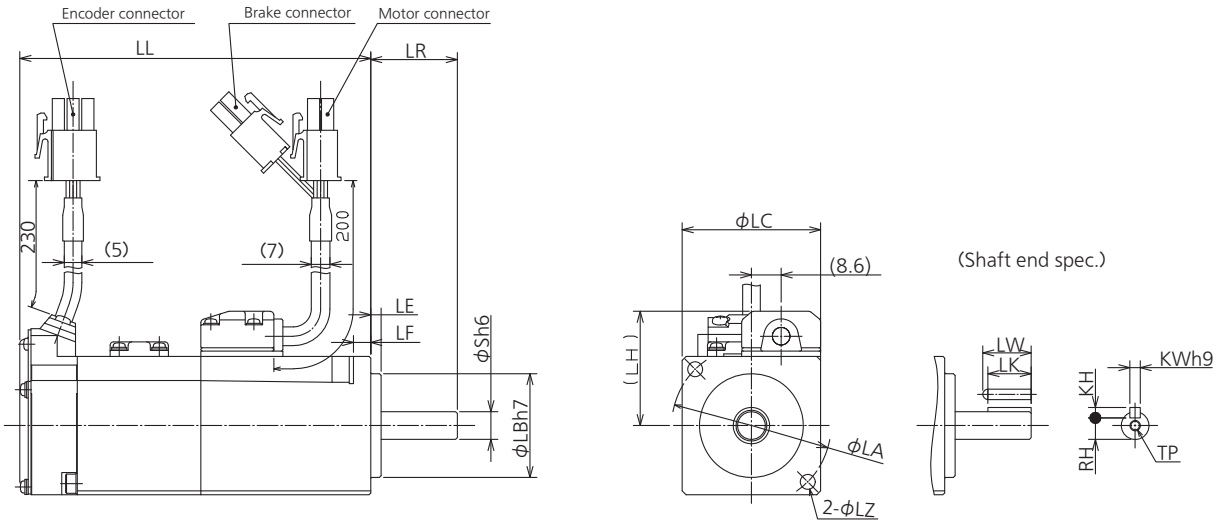

* Dimensions are subject to change without notice. Contact us or a dealer for the latest information.

[Unit: mm]

MHMF series (High inertia)				
Motor output			50 W	100 W
Motor model		MHMF	5AZL1□2	01□L1□2
LL	Without oil seal	Without brake	53.5	67.5
		With brake	87.4	101.4
	With oil seal	Without brake	57.5	71.5
		With brake	91.4	105.4
LR			25	
S			8	
LA			46	
LB			30	
LC			40	
LE			3	
LF			5	
LH			33	
LZ			4.3	
Key way dimensions	LW		14	
	LK		12.5	
	KW		3	
	KH		3	
	RH		6.2	
	TP		M3 depth 6	
Mass (kg)	Without oil seal	Without brake	0.29	0.4
		With brake	0.51	0.62
	With oil seal	Without brake	0.31	0.42
		With brake	0.53	0.64
Connector specifications			Refer to P.2-56 “Specifications of Motor connector”	

Caution Reduce the moment of inertia ratio if high speed response operation is required.

Related page
- P.1-29 “Check of the Model”
- P.1-34 “Check of the Combination of the Driver and the Motor”
- P.7-61 “S-T Characteristics”

MHMF 50 W to 100 W(Connector type)

[Unit: mm]

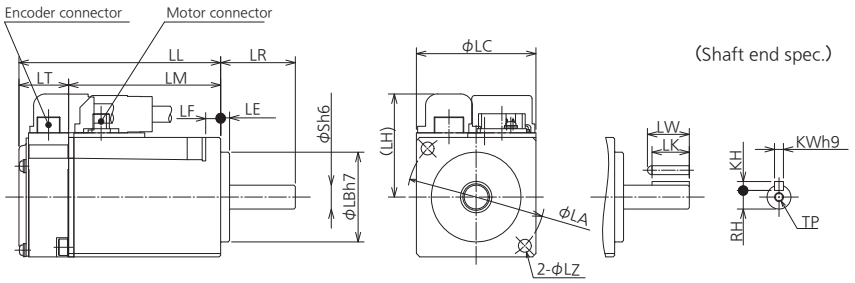

With brake

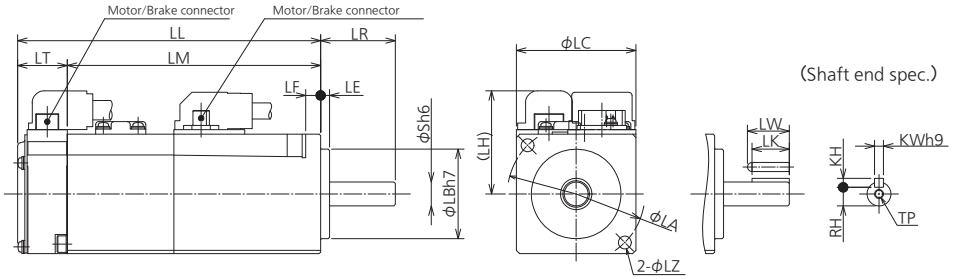

* Dimensions are subject to change without notice. Contact us or a dealer for the latest information.

[Unit: mm]

MHMF series (High inertia)				
Motor output			50 W	100 W
Motor model		MHMF	5AZL1□1	01□L1□1
LL	Without oil seal	Without brake	53.5	67.5
		With brake	87.4	101.4
	With oil seal	Without brake	57.5	71.5
		With brake	91.4	105.4
LR			25	
S			8	
LA			46	
LB			30	
LC			40	
LE			3	
LF			5	
LH			34.5	
LM	Without oil seal	Without brake	36.9	50.9
		With brake	70.8	84.8
	With oil seal	Without brake	40.9	54.9
		With brake	74.8	88.8
LT			16.6	
LZ			4.3	
Key way dimensions	LW		14	
	LK		12.5	
	KW		3	
	KH		3	
	RH		6.2	
	TP		M3 depth 6	
Mass (kg)	Without oil seal	Without brake	0.29	0.40
		With brake	0.51	0.62
	With oil seal	Without brake	0.31	0.42
		With brake	0.53	0.64
Connector specifications			Refer to P.2-56 “Specifications of Motor connector”	

Caution Reduce the moment of inertia ratio if high speed response operation is required.

Related page
- P.1-29 “Check of the Model”
- P.1-34 “Check of the Combination of the Driver and the Motor”
- P.7-61 “S-T Characteristics”

MHMF 50 W to 100 W(Leadwire type,with oil seal(with protect lip))

[Unit: mm]

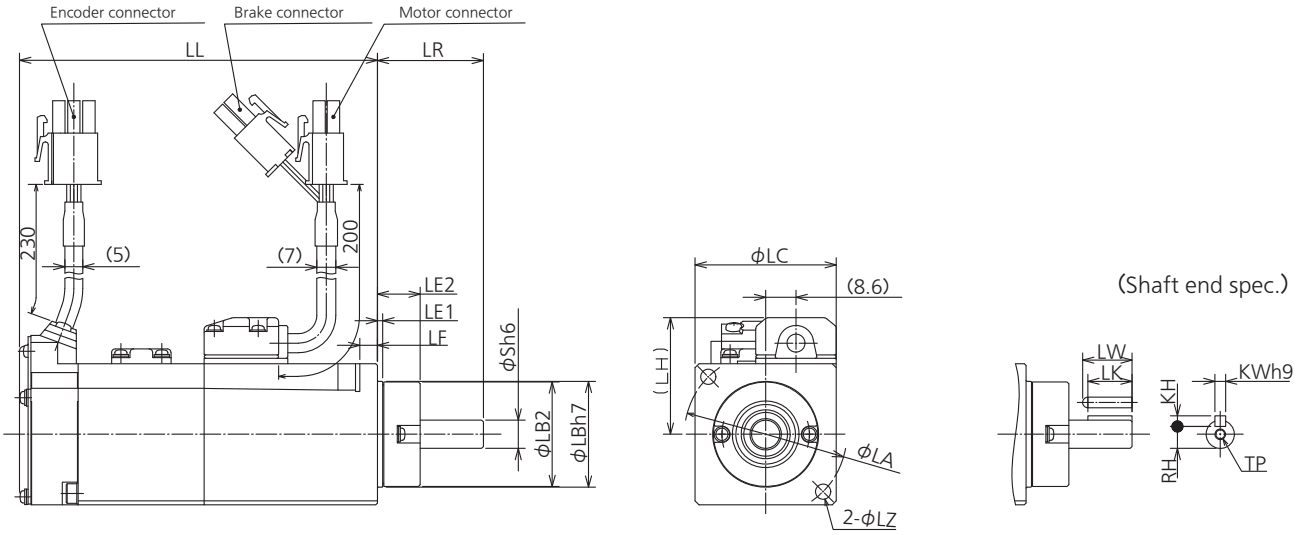

* Dimensions are subject to change without notice. Contact us or a dealer for the latest information.

[Unit: mm]

MHMF series (High inertia)				
Motor output			50 W	100 W
Motor model		MHMF	5AZL1□4	01□L1□4
LL	With oil seal (With protect lip)	Without brake	53.5	67.5
		With brake	87.4	101.4
LR			30	
S			8	
LA			46	
LB1			30	
LB2			29.6	
LC			40	
LE1			1.5	
LE2			12.1	
LF			5	
LH			33	
LZ			4.3	
Key way dimensions	LW		14	
	LK		12.5	
	KW		3	
	KH		3	
	RH		6.2	
	TP		M3 depth 6	
Mass (kg)		Without brake	0.31	0.42
		With brake	0.53	0.64
Connector specifications			Refer to P.2-56 “Specifications of Motor connector”	

Caution Reduce the moment of inertia ratio if high speed response operation is required.

Related page
• P.1-29 “Check of the Model” • P.1-34 “Check of the Combination of the Driver and the Motor”
• P.7-61 “S-T Characteristics”

MHMF 50 W to 100 W(Connector type,with oil seal(with protect lip))

[Unit: mm]

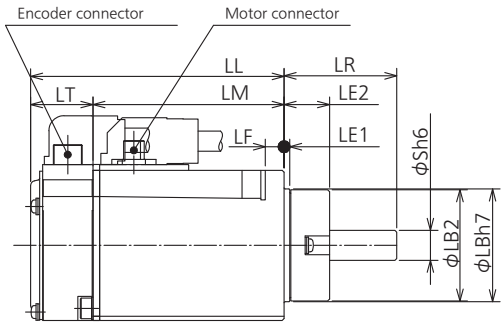

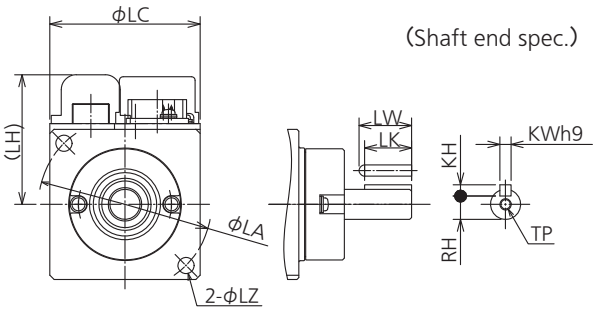

With brake

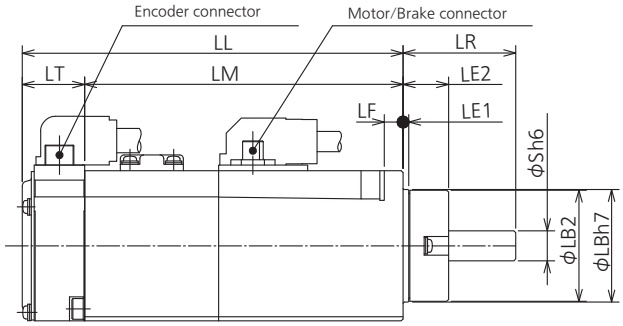

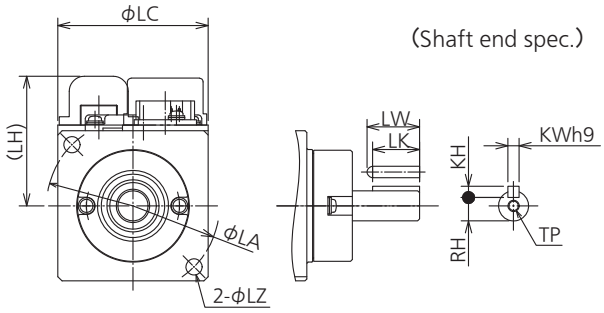

* Dimensions are subject to change without notice. Contact us or a dealer for the latest information.

[Unit: mm]

MHMF series (High inertia)				
Motor output			50 W	100 W
Motor model		MHMF	5AZL1□3	01□L1□3
LL	With oil seal (With protect lip)	Without brake	53.5	67.5
		With brake	87.4	101.4
LR			30	
S			8	
LA			46	
LB1			30	
LB2			29.6	
LC			40	
LE1			1.5	
LE2			12.1	
LF			5	
LH			34.5	
LM		Without brake	36.9	50.9
		With brake	70.8	84.8
LT			16.6	
LZ			4.3	
Key way dimensions	LW		14	
	LK		12.5	
	KW		3	
	KH		3	
	RH		6.2	
	TP		M3 depth 6	
Mass (kg)		Without brake	0.31	0.42
		With brake	0.53	0.64
Connector specifications			Refer to P.2-56 “Specifications of Motor connector”	

Caution Reduce the moment of inertia ratio if high speed response operation is required.

Related page
- P.1-29 “Check of the Model”
- P.1-34 “Check of the Combination of the Driver and the Motor”
- P.7-61 “S-T Characteristics”

MHMF 200 W to 1.0 kW(□80)(Leadwire type)

[Unit: mm]

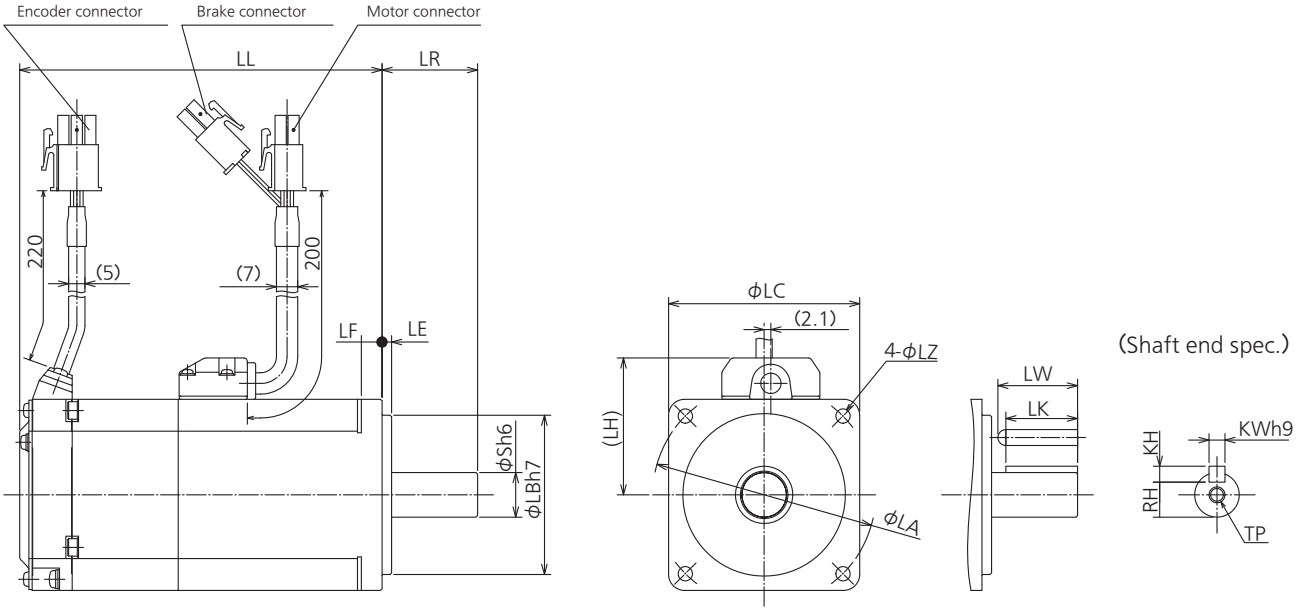

* Dimensions are subject to change without notice. Contact us or a dealer for the latest information.

[Unit: mm]

MHMF series (High inertia)						
Motor output			200 W	400 W	750 W	1.0 kW
Motor model		MHMF	02□L1□2	04□L1□2	082L1 □ 2	092L1 □ 2
LL	Without oil seal	Without brake	67.5	84.5	91.9	104.7
		With brake	96.8	113.8	125.5	138.3
	With oil seal	Without brake	71	88	95.4	108.2
		With brake	100.3	117.3	129	141.8
LR			30		35	
S			11	14	19	
LA			70		90	
LB			50		70	
LC			60		80	
LE			3			
LF			6.5		8	
LH			43		53	
LZ			4.5		6	
Key way dimensions	LW		20	25		
	LK		18	22.5	22	
	KW		4	5	6	
	KH		4	5	6	
	RH		8.5	11	15.5	
	TP		M4 depth 8	M5 depth 10		
Mass (kg)	Without oil seal	Without brake	0.75	1.1	2.2	2.7
		With brake	1.1	1.5	2.9	3.4
	With oil seal	Without brake	0.78	1.2	2.3	2.8
		With brake	1.2	1.6	3.0	3.5
Connector specifications			Refer to P.2-56 “Specifications of Motor connector”			

Caution Reduce the moment of inertia ratio if high speed response operation is required.

Related page
- P.1-29 “Check of the Model”
- P.1-34 “Check of the Combination of the Driver and the Motor”
- P.7-61 “S-T Characteristics”

MHMF 200 W to 1.0 kW(□80)(Connector type)

[Unit: mm]

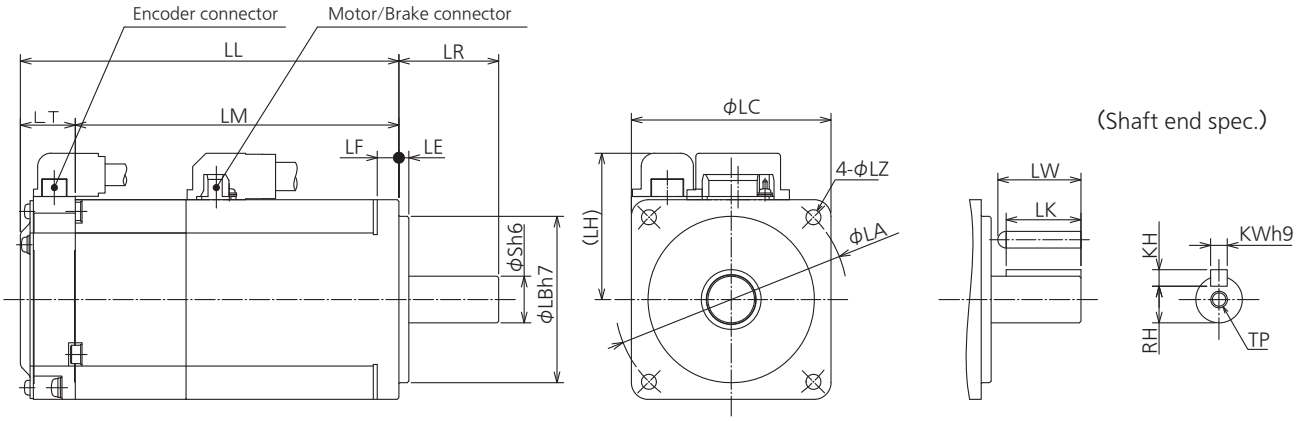

* Dimensions are subject to change without notice. Contact us or a dealer for the latest information.

[Unit: mm]

MHMF series (High inertia)						
Motor output			200 W	400 W	750 W	1.0 kW
Motor model		MHMF	02□L1□1	04□L1□1	082L1 □ 1	092L1 □ 1
LL	Without oil seal	Without brake	67.5	84.5	91.9	104.7
		With brake	96.8	113.8	125.5	138.3
	With oil seal	Without brake	71	88	95.4	108.2
		With brake	100.3	117.3	129	141.8
LR			30		35	
S			11	14	19	
LA			70		90	
LB			50		70	
LC			60		80	
LE			3			
LF			6.5		8	
LH			44		54	
LM	Without oil seal	Without brake	51	68	75.4	88.2
		With brake	80.3	97.3	109	121.8
	With oil seal	Without brake	54.5	71.5	78.9	91.7
		With brake	83.8	100.8	112.5	125.3
LT			16.5			
LZ			4.5		6	
Key way dimensions	LW		20	25		
	LK		18	22.5	22	
	KW		4	5	6	
	KH		4	5	6	
	RH		8.5	11	15.5	
	TP		M4 depth 8	M5 depth 10		
Mass (kg)	Without oil seal	Without brake	0.75	1.1	2.2	2.7
		With brake	1.1	1.5	2.9	3.4
	With oil seal	Without brake	0.78	1.2	2.3	2.8
		With brake	1.2	1.6	3.0	3.5
Connector specifications			Refer to P.2-56 “Specifications of Motor connector”			

Caution Reduce the moment of inertia ratio if high speed response operation is required.

Related page
- P.1-29 “Check of the Model”
- P.1-34 “Check of the Combination of the Driver and the Motor”
- P.7-61 “S-T Characteristics”

MHMF 200 W to 1.0 kW(□80)(Leadwire type,with oil seal(with protect lip))

[Unit: mm]

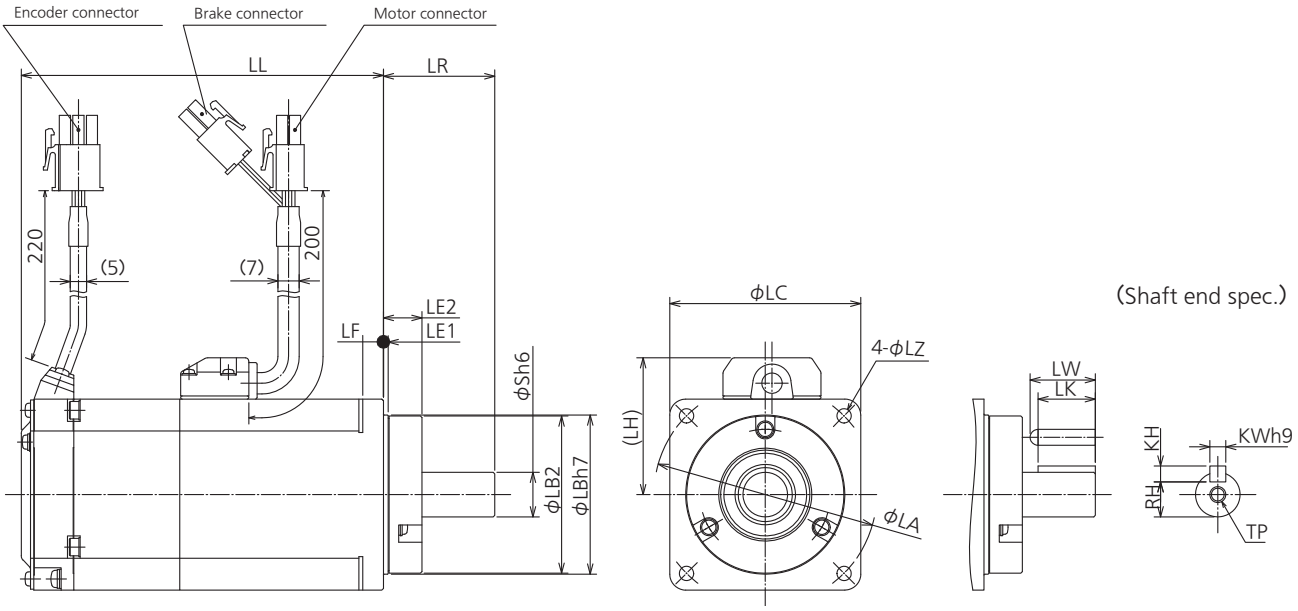

* Dimensions are subject to change without notice. Contact us or a dealer for the latest information.

[Unit: mm]

MHMF series (High inertia)						
Motor output			200 W	400 W	750 W	1.0 kW
Motor model		MHMF	02□L1□4	04□L1□4	082L1 □ 4	092L1 □ 4
LL	With oil seal (With protect lip)	Without brake	67.5	84.5	91.9	104.7
		With brake	96.8	113.8	125.5	138.3
LR			35		40	
S			11	14	19	
LA			70		90	
LB1			50		70	
LB2			49.4		69.4	
LC			60		80	
LE1			1.5			
LE2			12.1			
LF			6.5		8	
LH			43		53	
LZ			4.5		6	
Key way dimensions	LW		20	20.5	25	
	LK		18	18	22	
	KW		4	5	6	
	KH		4	5	6	
	RH		8.5	11	15.5	
	TP		M4 depth 8	M5 depth 10		
Mass (kg)		Without brake	0.78	1.2	2.3	2.8
		With brake	1.2	1.6	3.0	3.5
Connector specifications			Refer to P.2-56 “Specifications of Motor connector”			

Caution Reduce the moment of inertia ratio if high speed response operation is required.

Related page
- P.1-29 “Check of the Model”
- P.1-34 “Check of the Combination of the Driver and the Motor”
- P.7-61 “S-T Characteristics”

MHMF 200 W to 1.0 kW(□80)(Connector type,with oil seal(with protect lip))

[Unit: mm]

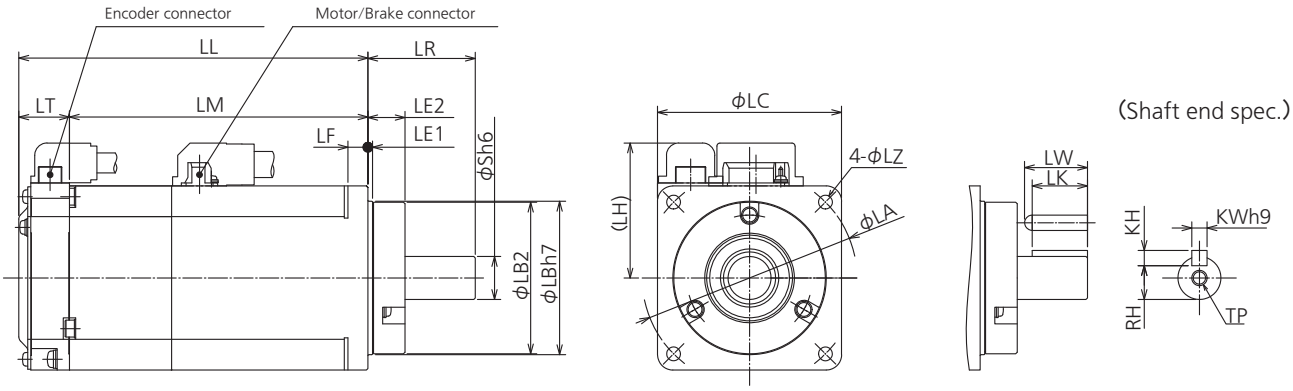

* Dimensions are subject to change without notice. Contact us or a dealer for the latest information.

[Unit: mm]

MHMF series (High inertia)						
Motor output			200 W	400 W	750 W	1.0 kW
Motor model		MHMF	02□L1□3	04□L1□3	082L1 □ 3	092L1 □ 3
LL	With oil seal (With protect lip)	Without brake	67.5	84.5	91.9	104.7
		With brake	96.8	113.8	125.5	138.3
LR			35		40	
S			11	14	19	
LA			70		90	
LB1			50		70	
LB2			49.4		69.4	
LC			60		80	
LE1			1.5			
LE2			12.1			
LF			6.5		8	
LH			44		54	
LM		Without brake	51	68	75.4	88.2
		With brake	80.3	97.3	109	121.8
LT			16.5			
LZ			4.5		6	
Key way dimension	LW		20	20.5	25	
	LK		18	18	22	
	KW		4	5	6	
	KH		4	5	6	
	RH		8.5	11	15.5	
	TP		M4 depth 8	M5 depth 10		
Mass (kg)		Without brake	0.78	1.2	2.3	2.8
		With brake	1.2	1.6	3.0	3.5
Connector specifications			Refer to P.2-56 “Specifications of Motor connector”			

Caution Reduce the moment of inertia ratio if high speed response operation is required.

Related page
- P.1-29 “Check of the Model”
- P.1-34 “Check of the Combination of the Driver and the Motor”
- P.7-61 “S-T Characteristics”

MHMF 1.0 kW to 5.0 kW(□130)(Encoder connector type JN2)

[Unit: mm]

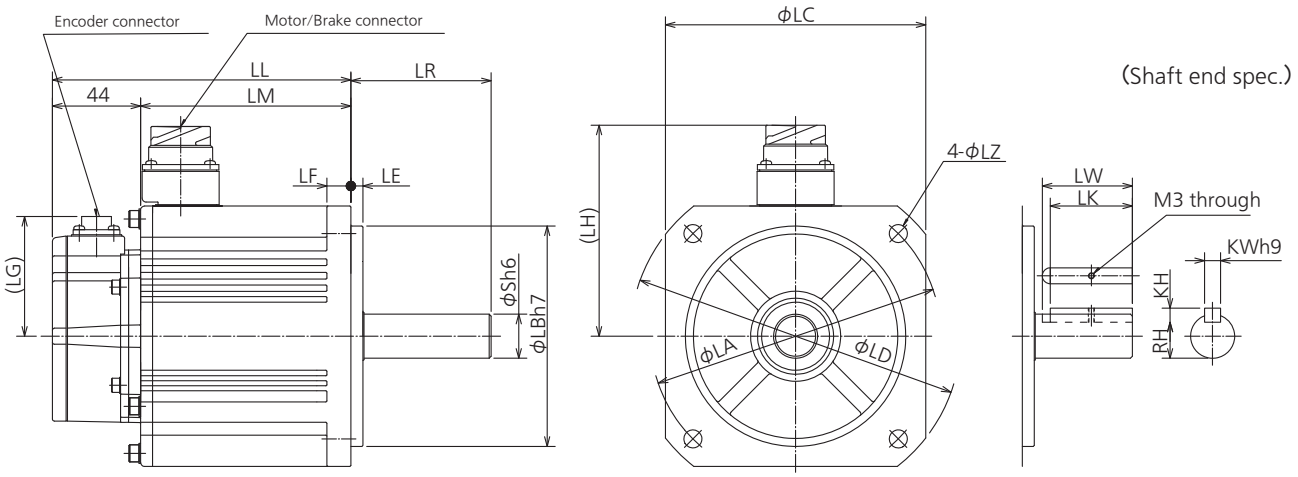

* Dimensions are subject to change without notice. Contact us or a dealer for the latest information.

[Unit: mm]

MHMF series (High inertia)							
Motor output		1.0 kW	1.5 kW	2.0 kW	3.0 kW	4.0 kW	5.0 kW
Motor model	MHMF	102L1□□	152L1□□	202L1□□	302L1□□	402L1□□	502L1□□
LL	Without brake	149	163	160	175	189.5	205.5
	With brake	177	191	189	204	218.5	234.5
LR		70		80			
S		22		35			
LA		145		200			
LB		110		114.3			
LC		130		176			
LD		165		233			
LE		6		3.2			
LF		12		18			
LG		60					
LH	Without brake	105		140			
	With brake	116		140			
LM	Without brake	105	119	116	131	145.5	161.5
	With brake	133	147	145	160	174.5	190.5
LZ		9		13.5			
Key way dimensions	LW	45		55			
	LK	41		50			
	KW	8		10			
	KH	7		8			
	RH	18		30			
Mass (kg)	Without brake	6.1	7.7	11.3	13.8	16.2	19.6
	With brake	7.6	9.2	14.6	17.2	19.4	22.8
Connector specifications		Refer to P.2-56 “Specifications of Motor connector”					

Caution Reduce the moment of inertia ratio if high speed response operation is required.

Related page
- P.1-29 “Check of the Model”
- P.1-34 “Check of the Combination of the Driver and the Motor”
- P.7-61 “S-T Characteristics”

MHMF 1.0 kW to 5.0 kW(□130)(Encoder connector type JL10)

[Unit: mm]

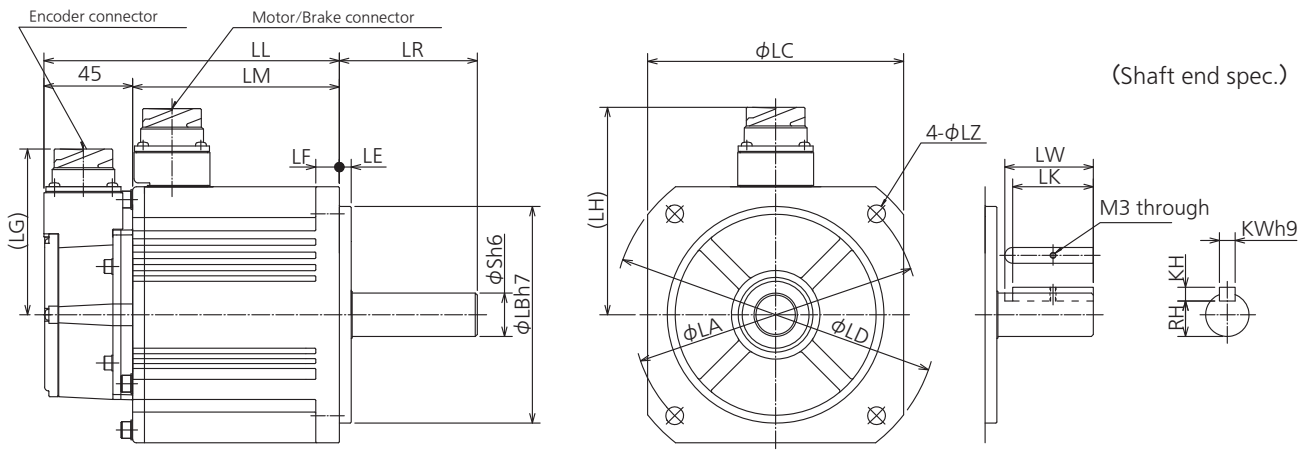

* Dimensions are subject to change without notice. Contact us or a dealer for the latest information.

[Unit: mm]

MHMF series (High inertia)							
Motor output		1.0 kW	1.5 kW	2.0 kW	3.0 kW	4.0 kW	5.0 kW
Motor model	MHMF	102L1□□	152L1□□	202L1□□	302L1□□	402L1□□	502L1□□
LL	Without brake	150	164	161	176	190.5	206.5
	With brake	178	192	190	205	219.5	235.5
LR		70		80			
S		22		35			
LA		145		200			
LB		110		114.3			
LC		130		176			
LD		165		233			
LE		6		3.2			
LF		12		18			
LG		84					
LH	Without brake	105		140			
	With brake	116		140			
LM	Without brake	105	119	116	131	145.5	161.5
	With brake	133	147	145	160	174.5	190.5
LZ		9		13.5			
Key way dimensions	LW	45		55			
	LK	41		50			
	KW	8		10			
	KH	7		8			
	RH	18		30			
Mass (kg)	Without brake	6.1	7.7	11.3	13.8	16.2	19.6
	With brake	7.6	9.2	14.6	17.2	19.4	22.8
Connector specifications		Refer to P.2-56 "Specifications of Motor connector"					

Caution Reduce the moment of inertia ratio if high speed response operation is required.

Related page
- P.1-29 "Check of the Model"
- P.1-34 "Check of the Combination of the Driver and the Motor"
- P.7-61 "S-T Characteristics"

MHMF 7.5 kW (Without brake Encoder connector type JN2)

[Unit: mm]

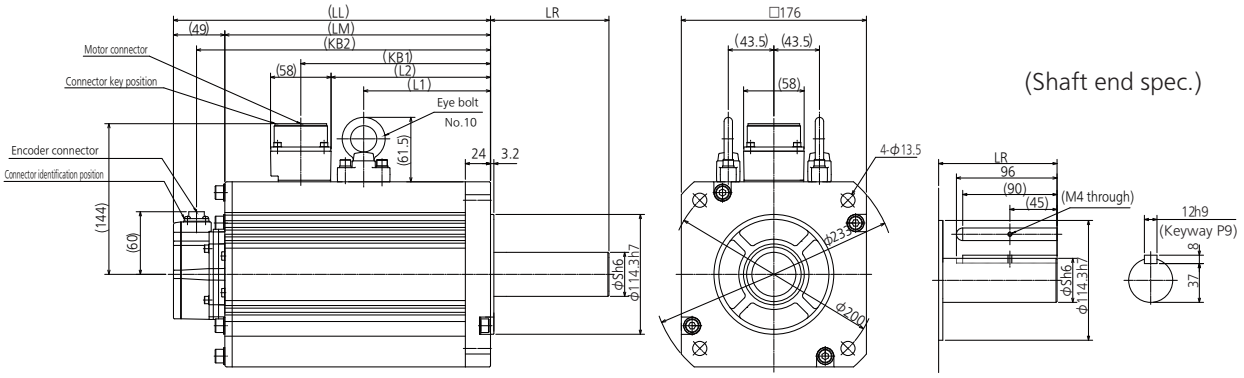

* Dimensions are subject to change. Further confirmation for dimension is required when using for design.

[Unit : mm]

MHMF series (High inertia)									
Motor model	Rated output	LL	LR	LM	S	KB1	KB2	L1	L2
MHMF752L1□□	7.5	302.5	113	253.5	42	181	280.5	121	152

MHMF 7.5 kW (With brake Encoder connector type JN2)

[Unit: mm]

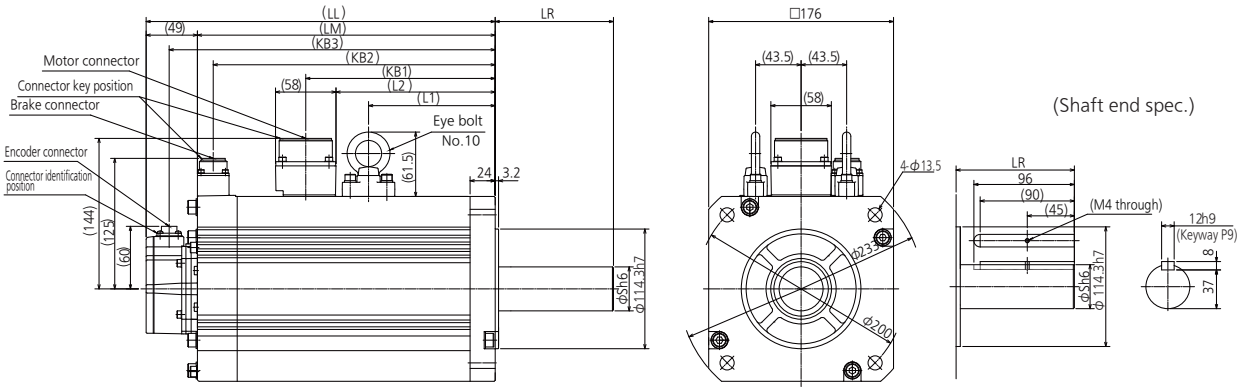

* Dimensions are subject to change. Further confirmation for dimension is required when using for design.

[Unit : mm]

MHMF series (High inertia)										
Motor model	Rated output	LL	LR	LM	S	KB1	KB2	KB3	L1	L2
MHMF752L1□□	7.5	333.5	113	284.5	42	181	269.5	311.5	121	152

Caution Reduce the moment of inertia ratio if high speed response operation is required.

Related page
- P.1-29 “Check of the Model”
- P.1-34 “Check of the Combination of the Driver and the Motor”
- P.7-61 “S-T Characteristics”

MHMF 7.5 kW (Without brake Encoder connector type JL10)

[Unit: mm]

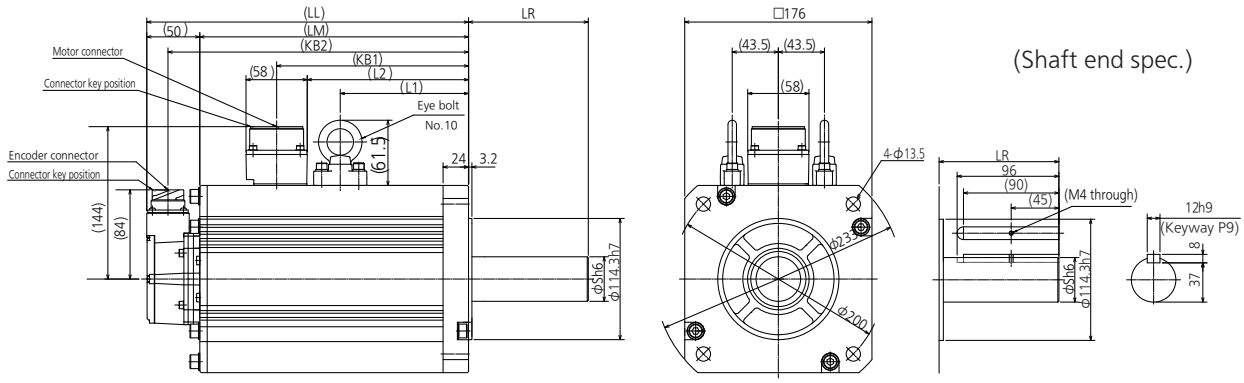

* Dimensions are subject to change. Further confirmation for dimension is required when using for design.

[Unit : mm]

MHMF series (High inertia)									
Motor model	Rated output	LL	LR	LM	S	KB1	KB2	L1	L2
MHMF752L1□□	7.5	303.5	113	253.5	42	181	283.5	121	152

MHMF 7.5 kW (With brake Encoder connector type JL10)

[Unit: mm]

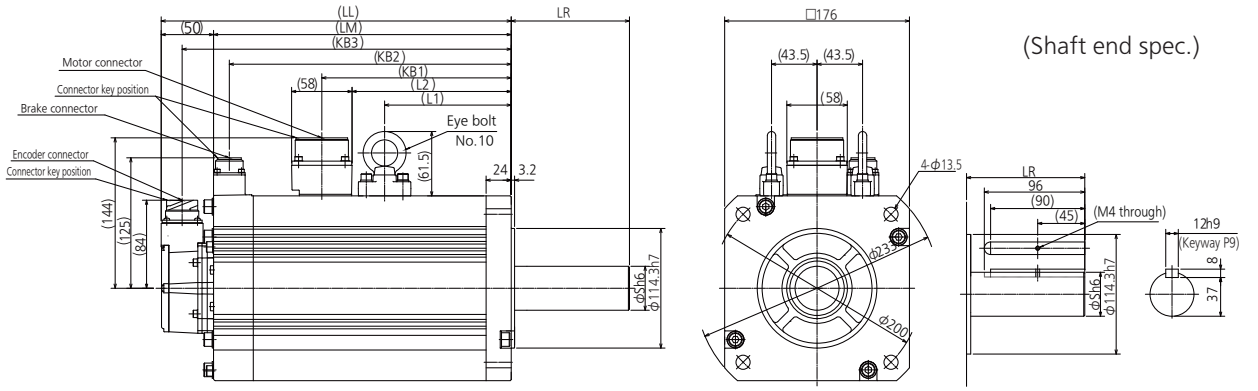

* Dimensions are subject to change. Further confirmation for dimension is required when using for design.

[Unit : mm]

MHMF series (High inertia)										
Motor model	Rated output	LL	LR	LM	S	KB1	KB2	KB3	L1	L2
MHMF752L1□□	7.5	334.5	113	284.5	42	181	269.5	314.5	121	152

Caution Reduce the moment of inertia ratio if high speed response operation is required.

Related page
• P.1-29 "Check of the Model" • P.1-34 "Check of the Combination of the Driver and the Motor"
• P.7-61 "S-T Characteristics"

MHMF 1.0 kW to 5.0 kW(400 V)

[Unit: mm]

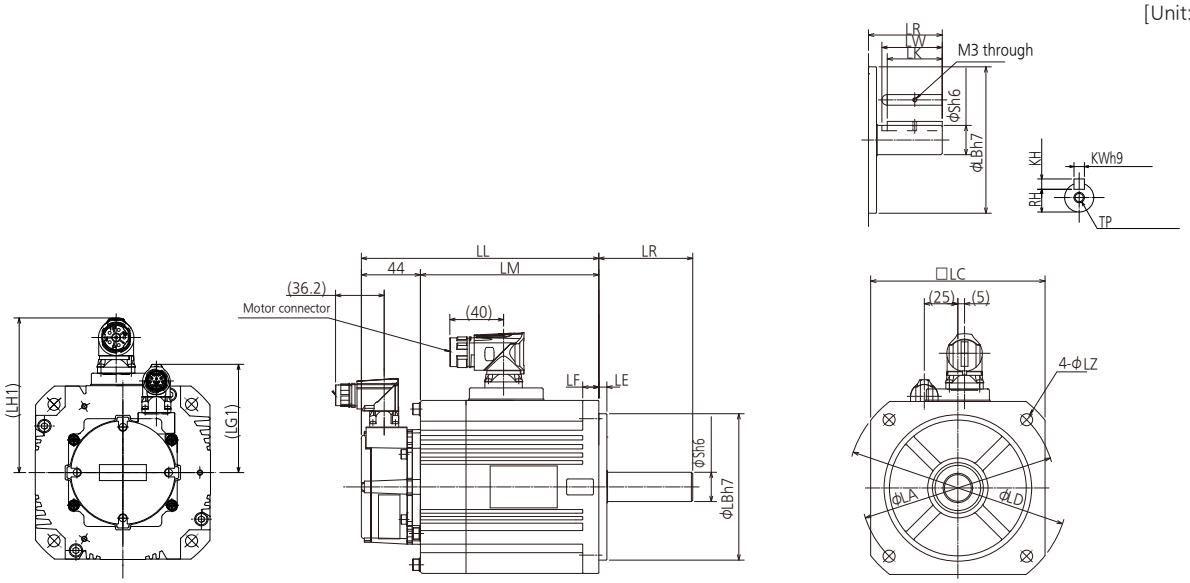

* Dimensions are subject to change. Further confirmation for dimension is required when using for design.

[Unit : mm]

MHMF series (High inertia)							
Motor outputl		1.0 kW	1.5 kW	2.0 kW	3.0 kW	4.0 kW	5.0 kW
Motor model	MHMF	104L1□□M	154L1□□M	204L1□□M	304L1□□M	404L1□□M	504L1□□M
LL	Without brake	149	163		178	192.5	208.5
	With brake	177	191	192	207	221.5	237.5
LR		70		80			
S		22		35			
LA		145		200			
LB		110		114.3			
LC		130		176			
LD		165		233			
LE		6		3.2			
LF		12		18			
LH1		116.2		139.2			
LG1		81.3					
LM	Without brake	105	119		134	148.5	164.5
	With brake	133	147	148	163	177.5	193.5
KB1		71	85	80.5	95.5	110	126
KB2	Without brake	132	146		161	175.5	191.5
	With brake	160	174	175	190	204.5	220.5
LZ		9		13.5			
Key way dimensions	LW	45		55			
	LK	41		50			
	KW	8		10			
	KH	7		8			
	RH	18		30			
Mass (kg)	Without brake	6.1	7.7	11.3	13.8	16.2	19.6
	With brake	7.6	9.2	14.6	17.2	19.4	22.8
Connector specifications		Refer to P.2-56 “Specifications of Motor connector”					

Caution Reduce the moment of inertia ratio if high speed response operation is required.

Related page
- P.1-29 “Check of the Model”
- P.1-34 “Check of the Combination of the Driver and the Motor”
- P.7-61 “S-T Characteristics”

Note (1) 400 V specification motors are not sold in Japan.
In addition, 400 V specification motors purchased outside Japan and equipment equipped with 400 V specification motors cannot be brought into Japan.

7. Dimensions

Motor(Batteryless absolute encoder type)

MSMF 50 W to 100 W (Lead wire type)

[Unit: mm]

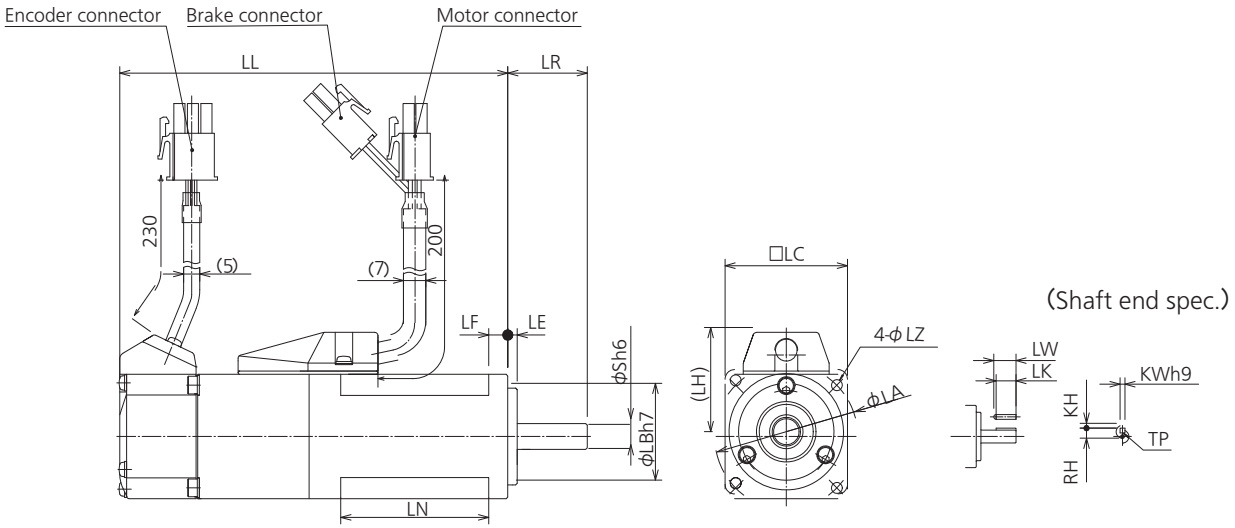

※Dimensions are subject to change. Further confirmation for dimension is required when using for design.

MSMF series (Low inertia)			
Motor output		50 W	100 W
Motor model	MSMF	5AZA1□2	01□A1□2
LL	Without brake	76.6	96.6
	With brake	106.6	126.6
LR		25	
S		8	
LA		45	
LB		30	
LC		38	
LE		3	
LF		6	
LH		32	
LN		26.5	46.5
LZ		3.4	
Key way dimensions	LW	14	
	LK	12.5	
	KW	3	
	KH	3	
	RH	6.2	
	TP	M3 depth 6	
Mass (kg)	Without brake	0.32	0.47
	With brake	0.53	0.68
Connector specifications		Refer to P.2-56 "Specifications of Motor connector"	

Caution Reduce the moment of inertia ratio if high speed response operation is required.

Related page
- P.1-29 "Check of the Model"
- P.1-34 "Check of the Combination of the Driver and the Motor"
- P.7-61 "S-T Characteristics"

MSMF 200 W to 1.0 kW(□80)(Lead wire type)

[Unit: mm]

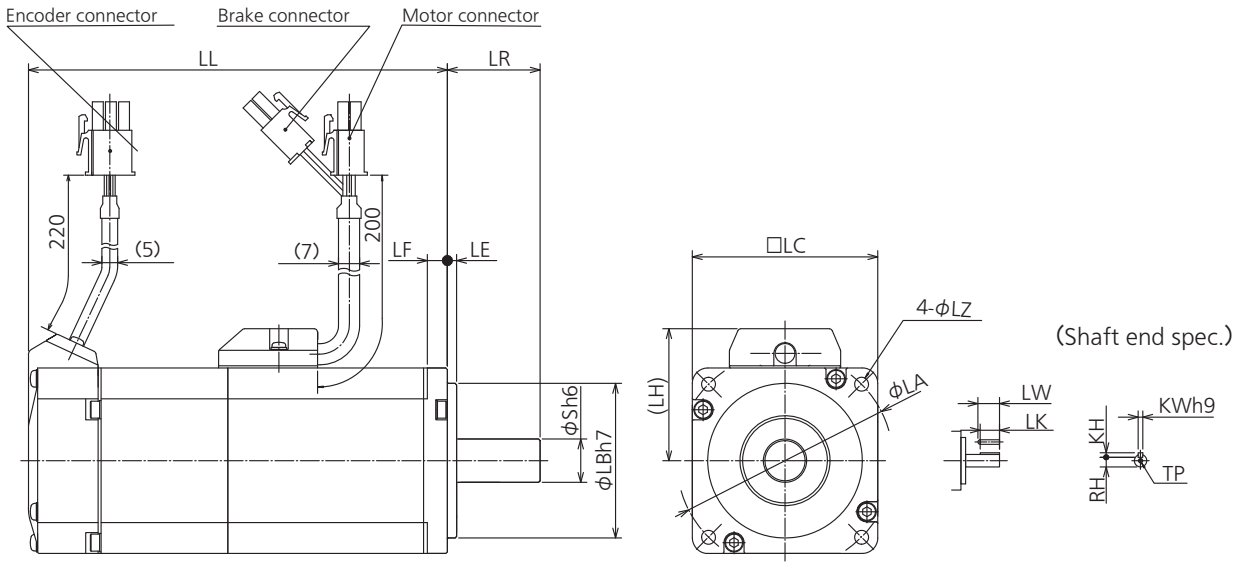

*Dimensions are subject to change. Further confirmation for dimension is required when using for design.

[Unit : mm]

MSMF series (Low inertia)					
Motor outputl		200 W	400 W	750 W	1.0 kW
Motor model	MSMF	02□A1□2	04□A1□2	082□A1□2	092□A1□2
LL	Without brake	81	100.5	112.2	127.6
	With brake	117.5	137	149.2	164.2
LR		30		35	
S		11	14	19	
LA		70		90	
LB		50		70	
LC		60		80	
LE		3			
LF		6.5		8	
LH		43		53	
LZ		4.5		6	
Key way dimensions	LW	20	25	25	
	LK	18	22.5	22	
	KW	4	5	6	
	KH	4	5	6	
	RH	8.5	11	15.5	
	TP	M4 depth 8	M5 depth 10		
Mass (kg)	Without brake	0.82	1.2	2.3	2.8
	With brake	1.3	1.7	3.1	3.6
Connector specifications		Refer to P.2-56 “Specifications of Motor connector”			

Caution Reduce the moment of inertia ratio if high speed response operation is required.

Related page
- P.1-29 “Check of the Model”
- P.1-34 “Check of the Combination of the Driver and the Motor”
- P.7-61 “S-T Characteristics”

MSMF 1.0 kW (□ 100) to 5.0 kW (□ 130) (Encoder connector JN2)

[Unit: mm]

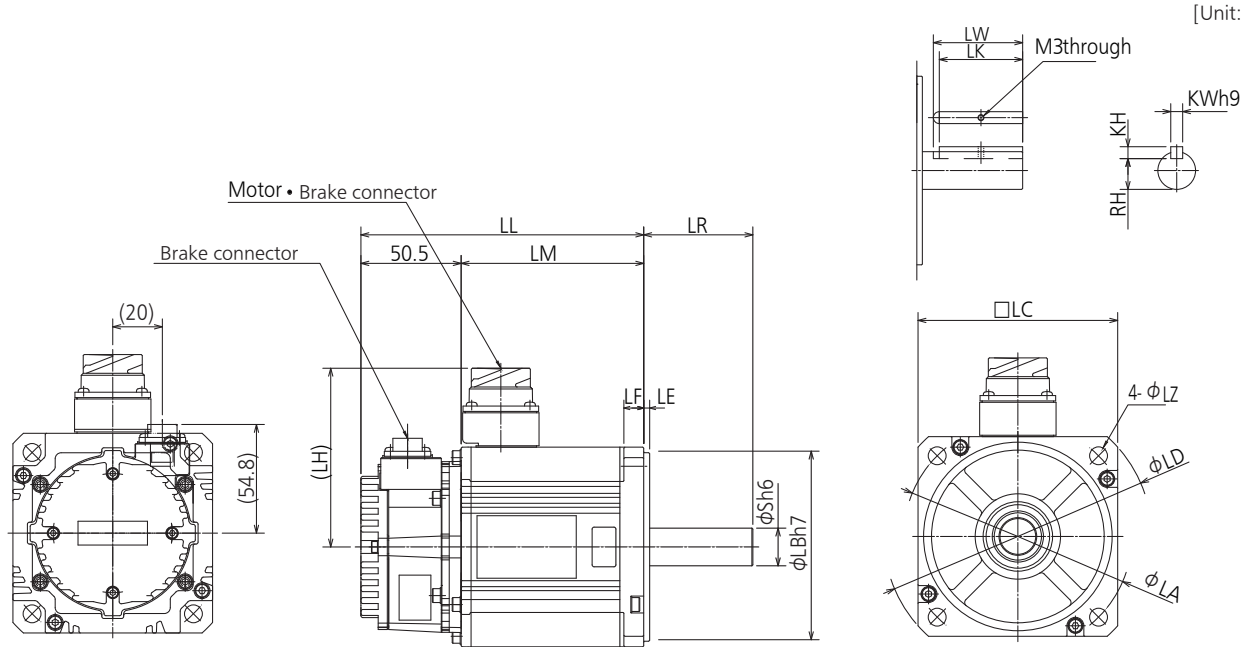

*Dimensions are subject to change. Further confirmation for dimension is required when using for design.

[Unit : mm]

MSMF series (Low inertia)								
Motor outputl			1.0 kW	1.5 kW	2.0 kW	3.0 kW	4.0 kW	5.0 kW
Motor model		MSMF	102A1□□	152A1□□	202A1□□	302A1□□	402A1□□	502A1□□
LL		Without brake	142.5	161	180	191.5	210.5	245.5
		With brake	169.5	188	207	216.5	238.5	273.5
LR			55				65	
S			19			22	24	
LA			115			145		
LB			95			110		
LC			100			120	130	
LD			135			162	165	
LE			3				6	
LF			10			12		
LH		Without brake	90			113	118	
		With brake	101			113	118	
LM		Without brake	92	110.5	129.5	141	160	195
		With brake	119	137.5	156.5	166	188	223
LZ			9					
Key way dimensions	LW		45				55	
	LK		42			41	51	
	KW		6			8		
	KH		6			7		
	RH		15.5			18	20	
Mass (kg)		Without brake	3.6	4.6	5.6	8.7	11.5	14.5
		With brake	4.7	5.6	6.6	9.9	13.2	16.1
Connector specifications			Refer to P.2-56 “Specifications of Motor connector”					

Caution Reduce the moment of inertia ratio if high speed response operation is required.

Related page
• P.1-29 “Check of the Model” • P.1-34 “Check of the Combination of the Driver and the Motor”
• P.7-61 “S-T Characteristics”

MSMF 1.0 kW to 5.0 kW(400 V)

[Unit: mm]

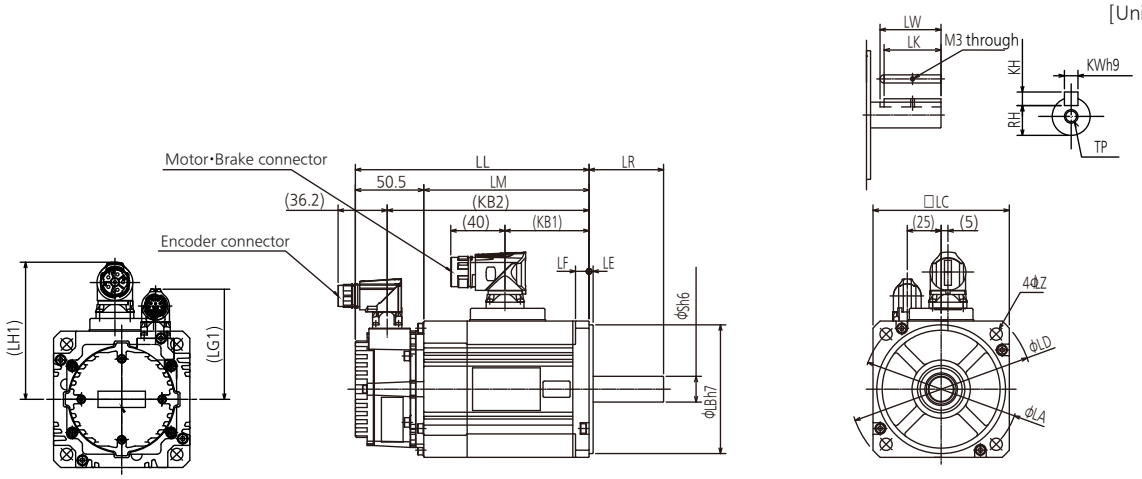

*Dimensions are subject to change. Further confirmation for dimension is required when using for design.

[Unit : mm]

MSMF series (Low inertia)							
Motor output		1.0 kW	1.5 kW	2.0 kW	3.0 kW	4.0 kW	5.0 kW
Motor model	MSMF	104A1□□M	154A1□□M	204A1□□M	304A1□□M	404A1□□M	504A1□□M
LL	Without brake	145.5	164	183	194.5	213.5	248.5
	With brake	172.5	191	210	219.5	241.5	276.5
LR		55			65	65	
S		19			22	24	
LA		115			145		
LB		95			110		
LC		100			120	130	
LD		135			162	165	
LE		3				6	
LF		10			12		
LH1		101.2			101.5	106.5	
LG1		81.3					
LM	Without brake	95	113.5	132.5	144	163	198
	With brake	122	140.5	159.5	169	191	226
KB1		62	80.5	99.5	121	139	174
KB2	Without brake	122	140.5	159.5	171	190	225
	With brake	149	167.5	186.5	196	218	253
LZ		9					
Key way dimensions	LW	45				55	
	LK	42			41	51	
	KW	6			8		
	KH	6			7		
	RH	15.5			18	20	
Mass (kg)	Without brake	3.6	4.6	5.6	8.7	11.5	14.5
	With brake	4.7	5.6	6.6	9.9	13.2	16.1
Connector specifications		Refer to P.2-56 “Specifications of Motor connector”					

Caution Reduce the moment of inertia ratio if high speed response operation is required.

Related page
- P.1-29 “Check of the Model”
- P.1-34 “Check of the Combination of the Driver and the Motor”
- P.7-61 “S-T Characteristics”

Note
1) 400 V specification motors are not sold in Japan.
In addition, 400 V specification motors purchased outside Japan and equipment equipped with 400 V specification motors cannot be brought into Japan.

MQMF 100 W to 400 W (Lead wire type)

[Unit: mm]

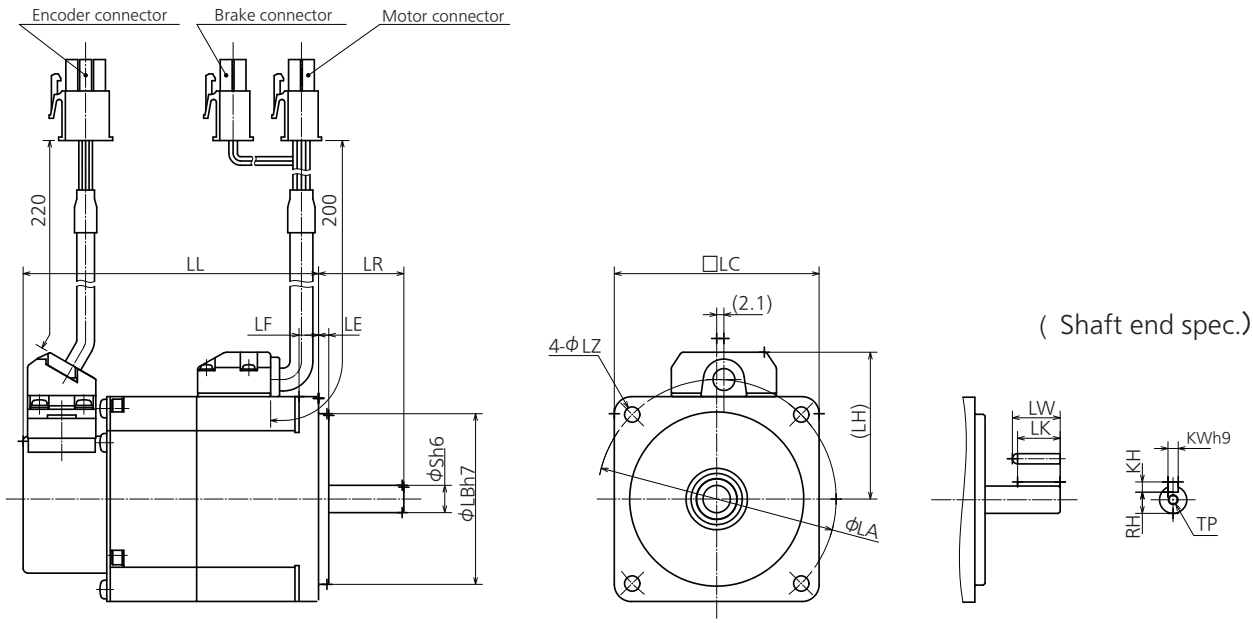

※Dimensions are subject to change. Further confirmation for dimension is required when using for design.

[Unit : mm]

MQMF series (Middle inertia)					
Motor output			100 W	200 W	400 W
Motor model		MQMF	01□A1□2	02□A1□2	04□A1□2
LL	Without oil seal	Without brake	65.2	71.1	83.6
		With brake	86.5	94.9	107.4
	With oil seal	Without brake	68.7	74.6	87.1
		With brake	90	98.4	110.9
LR			25	30	
S			8	11	14
LA			70	90	
LB			50	70	
LC			60	80	
LE			3		
LF			5.7	8	
LH			43	53	
LZ			4.5	6	
Key way dimensions	LW		14	20	25
	LK		12.5	18	22.5
	KW		3	4	5
	KH		3	4	5
	RH		6.2	8.5	11
	TP		M3 depth 6	M4 depth 8	M5 depth 10
Mass (kg)	Without oil seal	Without brake	0.54	1.1	1.5
		With brake	0.79	1.5	2.0
	With oil seal	Without brake	0.57	1.2	1.6
		With brake	0.82	1.6	2.1
Connector specifications			Refer to P.2-56 "Specifications of Motor connector"		

Caution Reduce the moment of inertia ratio if high speed response operation is required.

Related page
- P.1-29 "Check of the Model"
- P.1-34 "Check of the Combination of the Driver and the Motor"
- P.7-61 "S-T Characteristics"

MQMF 100 W-400 W (lead wire type, with oil seal (with protective lip))

[Unit: mm]

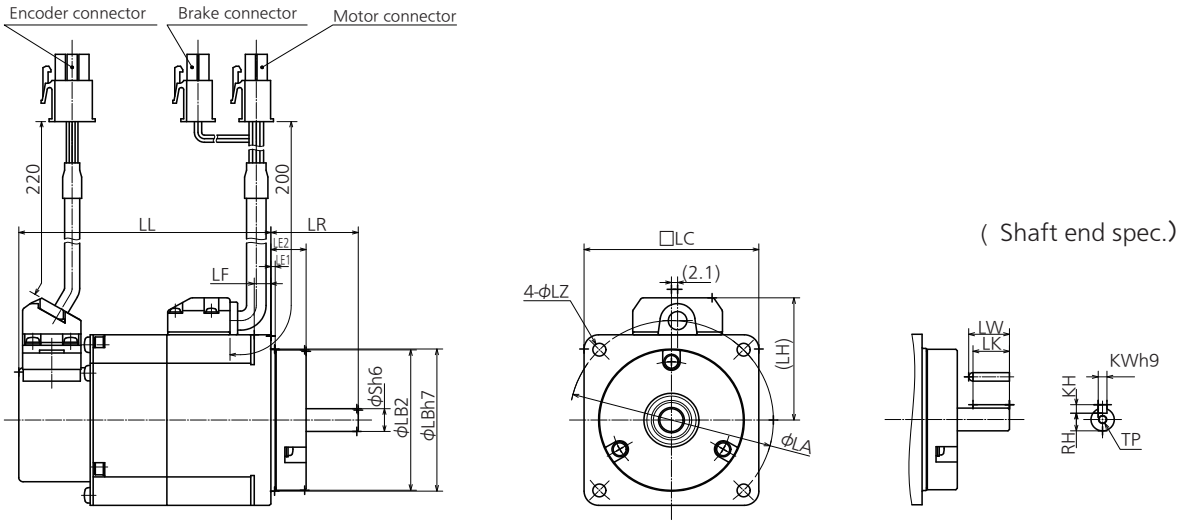

※Dimensions are subject to change. Further confirmation for dimension is required when using for design.

[Unit : mm]

MQMF series (Middle inertia)					
Motor output			100 W	200 W	400 W
Motor model		MQMF	01□A1□4	02□A1□4	04□A1□4
LL	With oil seal (With oil seal)	Without brake	65.2	71.1	83.6
		With brake	86.5	94.9	107.4
LR			30	35	
S			8	11	14
LA			70	90	
LB1			50	70	
LB2			49.4	69.4	
LC			60	80	
LE1			1.5		
LE2			12.1		
LF			5.7	8	
LH			43	53	
LZ			4.5	6	
Key way dimensions	LW		14	20	20.5
	LK		12.5	18	18
	KW		3	4	5
	KH		3	4	5
	RH		6.2	8.5	11
	TP		M3 depth 6	M4 depth 8	M5 depth 10
Mass(kg)		Without brake	0.57	1.2	1.6
		With brake	0.82	1.6	2.1
Connector specifications			Refer to P.2-56 "Specifications of Motor connector"		

Caution Reduce the moment of inertia ratio if high speed response operation is required.

Related page
- P.1-29 "Check of the Model"
- P.1-34 "Check of the Combination of the Driver and the Motor"
- P.7-61 "S-T Characteristics"

MDMF 1.0 kW to 5.0 kW (encoder connector JN2)

[Unit: mm]

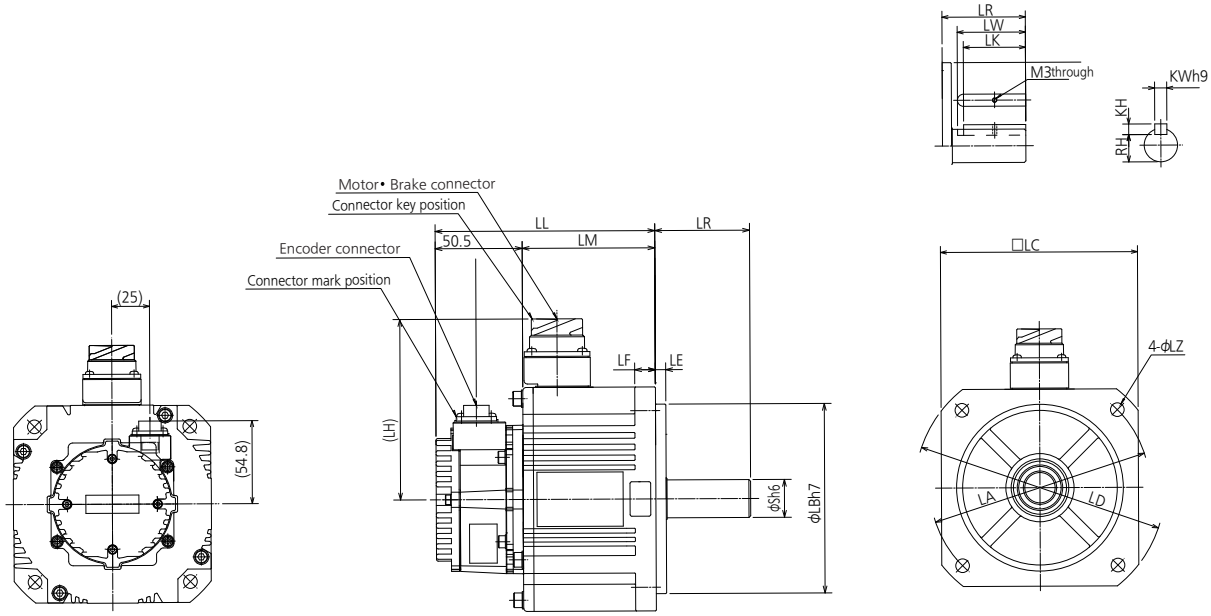

*Dimensions are subject to change. Further confirmation for dimension is required when using for design.

[Unit : mm]

MDMF series (Middle inertia)							
Motor outputl		1.0 kW	1.5 kW	2.0 kW	3.0 kW	4.0 kW	5.0 kW
Motor model	MDMF	102A1□□	152A1□□	202A1□□	302A1□□	402A1□□	502A1□□
LL	Without brake	127.5	141.5	155.5	183.5	166.5	181.5
	With brake	155.5	169.5	183.5	211.5	195.5	210.5
LR		55			65	70	
S		22			24	35	
LA		145				200	
LB		110				114.3	
LC		130				176	
LD		165				233	
LE		6				3.2	
LF		12				18	
LH	Without brake	105			118	140	
	With brake	116			118	140	
LM	Without brake	77	91	105	133	116	131
	With brake	105	119	133	161	145	160
LZ		9					
Key way dimensions	LW	45			55		
	LK	41			51	50	
	KW	8				10	
	KH	7				8	
	RH	18			20	30	
Mass (kg)	Without brake	4.6	5.7	6.9	9.3	13.4	15.6
	With brake	6.1	7.2	8.4	10.9	16.8	19.0
Connector specifications		Refer to P.2-56 “Specifications of Motor connector”					

Caution Reduce the moment of inertia ratio if high speed response operation is required.

Related page
• P.1-29 “Check of the Model” • P.1-34 “Check of the Combination of the Driver and the Motor”
• P.7-61 “S-T Characteristics”

MDMF 1.0 kW to 5.0 kW (400 V)

[Unit: mm]

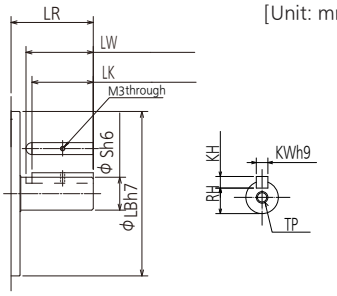

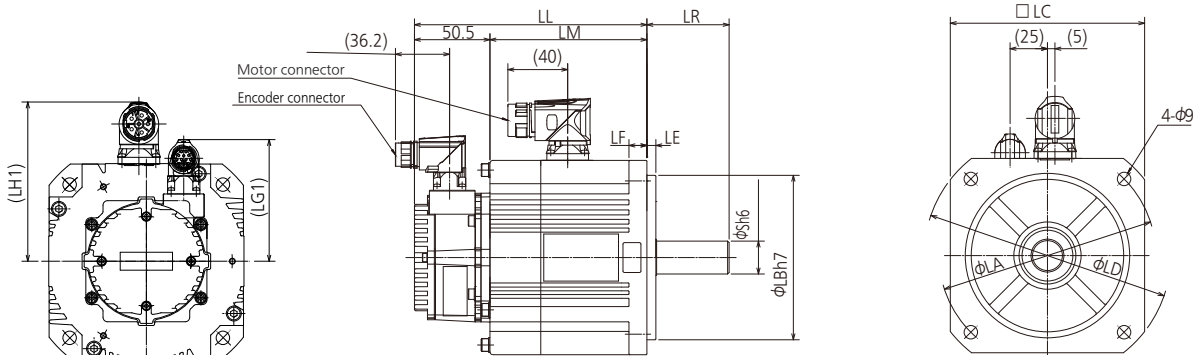

*Dimensions are subject to change. Further confirmation for dimension is required when using for design.

[Unit : mm]

MDMF series (Middle inertia)							
Motor output		1.0 kW	1.5 kW	2.0 kW	3.0 kW	4.0 kW	5.0 kW
Motor model	MDMF	104A1□□M	154A1□□M	204A1□□M	304A1□□M	404A1□□M	504A1□□M
LL	Without brake	127.5	141.5	155.5	183.5	169.5	184.5
	With brake	155.5	169.5	183.5	211.5	198.5	213.5
LR		55			65	70	
S		22			24	35	
LA		145				200	
LB		110				114.3	
LC		130				176	
LD		165				233	
LE		6				3.2	
LF		12				18	
LH1		106.5				129.8	
LG1		81.3					
LM	Without brake	77	91	105	133	119	134
	With brake	105	119	133	161	148	163
KB1		53	67	81	109	94	109
KB2	Without brake	104	118	132	160	146	161
	With brake	132	146	160	188	175	190
LZ		9				13.5	
Key way dimensions	LW	45			55	55	
	LK	41			51	50	
	KW	8				10	
	KH	7				8	
	RH	18			20	30	
Mass (kg)	Without brake	4.6	5.7	6.9	9.3	13.4	15.6
	With brake	6.1	7.2	8.4	10.9	16.8	19.0
Connector specifications		Refer to P.2-56 “Specifications of Motor connector”					

Caution Reduce the moment of inertia ratio if high speed response operation is required.

Related page
- P.1-29 “Check of the Model”
- P.1-34 “Check of the Combination of the Driver and the Motor”
- P.7-61 “S-T Characteristics”

Note

1) 400 V specification motors are not sold in Japan.
In addition, 400 V specification motors purchased outside Japan and equipment equipped with 400 V specification motors cannot be brought into Japan.

MGMF 0.85 kW to 4.4 kW (Encoder connector JN2)

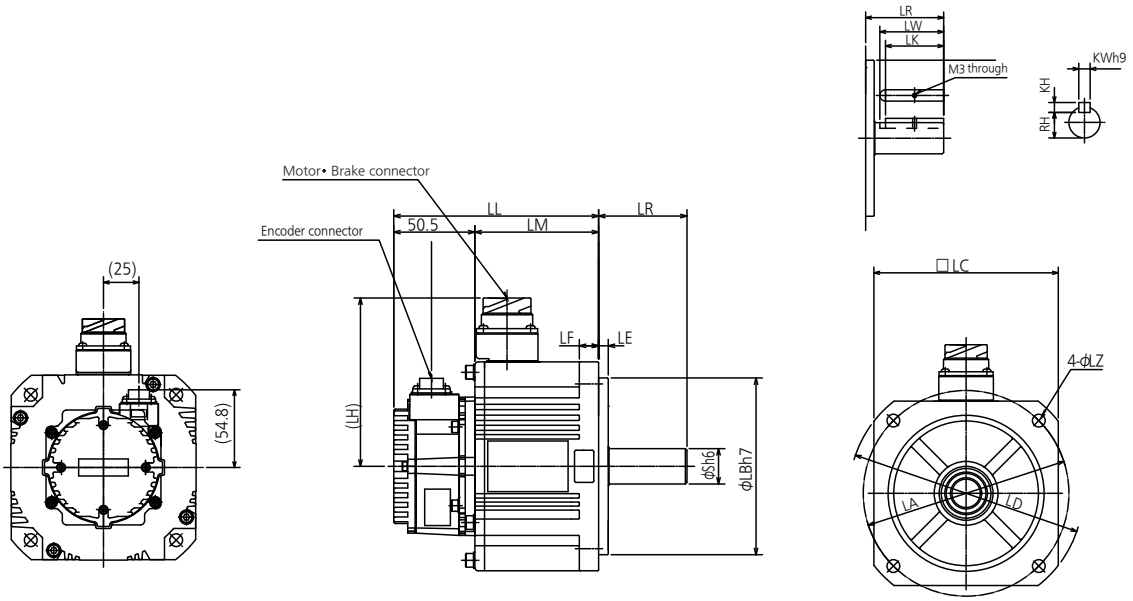

*Dimensions are subject to change. Further confirmation for dimension is required when using for design.

[Unit : mm]

MGMF series (Low inertia)							
Motor output		0.85 kW	1.3 kW	1.8 kW	2.4 kW	2.9 kW	4.4kW
Motor model	MGMF	092A1□□	132A1□□	182A1□□	242A1□□	292A1□□	442A1□□
LL	Without brake	127.5	141.5	155.5	166.5		181.5
	With brake	155.5	169.5	183.5	195.5		210.5
LR		55			70		
S		22			35		
LA		145			200		
LB		110			114.3		
LC		130			176		
LD		165			233		
LE		6			3.2		
LF		12			18		
LH	Without brake	105			140		
	With brake	116			140		
LM	Without brake	77	91	105	116		131
	With brake	105	119	133	145		160
LZ		9			13.5		
Key way dimensions	LW	45			55		
	LK	41			50		
	KW	8			10		
	KH	7			8		
	RH	18			30		
Mass (kg)	Without brake	4.6	5.7	6.9	13.4		15.6
	With brake	6.1	7.2	8.4	16.8		19.0
Connector specifications		Refer to P.2-56 “Specifications of Motor connector”					

Caution Reduce the moment of inertia ratio if high speed response operation is required.

Related page
• P.1-29 “Check of the Model” • P.1-34 “Check of the Combination of the Driver and the Motor”
• P.7-61 “S-T Characteristics”

MGMF 0.85 kW to 4.4 kW (400 V)

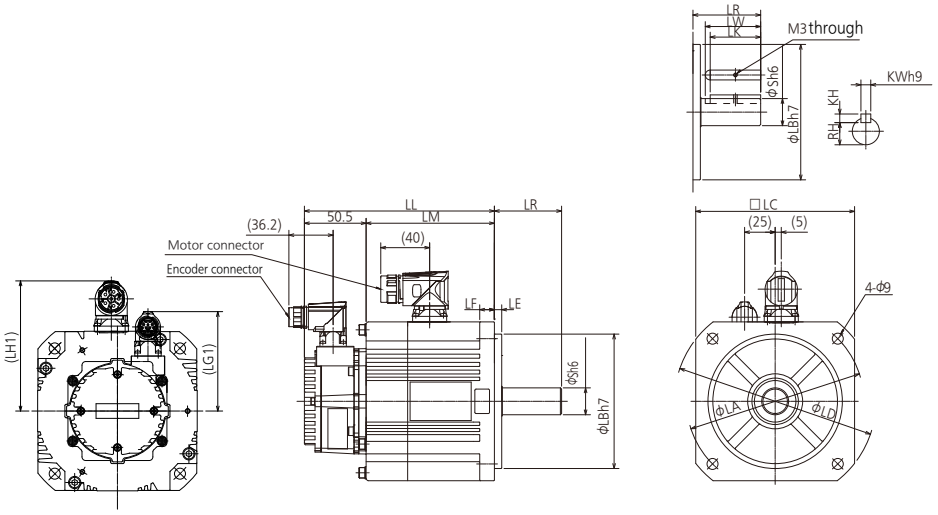

*Dimensions are subject to change. Further confirmation for dimension is required when using for design.

[Unit : mm]

MGMF series (Low inertia)							
Motor output		0.85 kW	1.3 kW	1.8 kW	2.4 kW	2.9 kW	4.4kW
Motor model	MGMF	094A1□□M	134A1□□M	184A1□□M	244A1□□M	294A1□□M	444A1□□M
LL	Without brake	121	135	149	163		178
	With brake	149	163	177	192		207
LR		55			70		
S		22			35		
LA		145			200		
LB		110			114.3		
LC		130			176		
LD		165			233		
LE		6			3.2		
LF		12			18		
LH1		106.5			129.8		
LG1		81.3					
LM	Without brake	77	91	105	119		134
	With brake	105	119	133	148		163
KB1		53	67	81	94		109
KB2	Without brake	104	118	132	146		161
	With brake	132	146	160	175		190
LZ		9			13.5		
Key way dimensions	LW	45			55		
	LK	41			50		
	KW	8			10		
	KH	7			8		
	RH	18			30		
Mass (kg)	Without brake	4.6	5.7	6.9	13.4		15.6
	With brake	6.1	7.5	8.4	16.8		19.0
Connector specifications		Refer to P.2-56 “Specifications of Motor connector”					

Caution Reduce the moment of inertia ratio if high speed response operation is required.

Related page
- P.1-29 “Check of the Model”
- P.1-34 “Check of the Combination of the Driver and the Motor”
- P.7-61 “S-T Characteristics”

1) 400 V specification motors are not sold in Japan.
In addition, 400 V specification motors purchased outside Japan and equipment equipped with 400 V specification motors cannot be brought into Japan.

MHMF 50 W to 100 W(Lead wire type)

[Unit : mm]

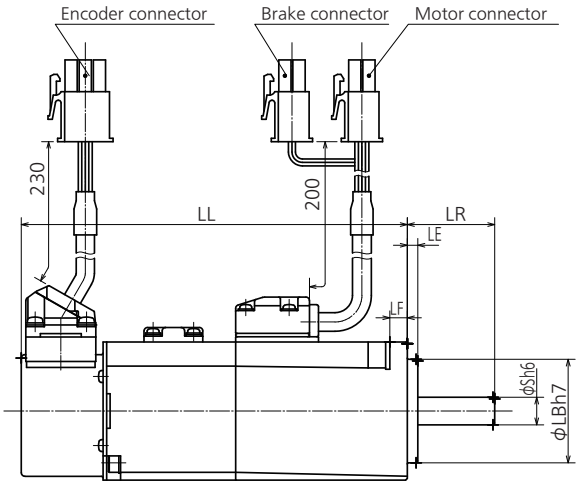

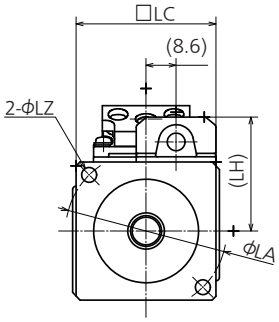

(Shaft end spec.)

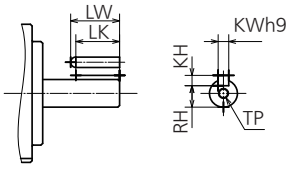

※Dimensions are subject to change. Further confirmation for dimension is required when using for design.

[Unit : mm]

MHMF series (High inertia)				
Motor output			50 W	100 W
Motor model		MHMF	5AZA1□2	01□A1□2
LL	Without oil seal	Without brake	62.5	76.5
		With brake	96.4	110.4
	With oil seal	Without brake	66.5	80.5
		With brake	100.4	114.4
LR			25	
S			8	
LA			46	
LB			30	
LC			40	
LE			3	
LF			5	
LH			33	
LZ			4.3	
Key way dimensions	LW		14	
	LK		12.5	
	KW		3	
	KH		3	
	RH		6.2	
	TP		M3 depth 6	
Mass (kg)	Without brake	Without brake	0.29	0.4
		With brake	0.51	0.62
	With brake	Without brake	0.31	0.42
		With brake	0.53	0.64
Connector specifications			Refer to P.2-56 "Specifications of Motor connector"	

Caution Reduce the moment of inertia ratio if high speed response operation is required.

Related page
- P.1-29 "Check of the Model"
- P.1-34 "Check of the Combination of the Driver and the Motor"
- P.7-61 "S-T Characteristics"

MHMF 50 W to 100 W((Lead wire type, with oil seal(With protective lip))

[Unit : mm]

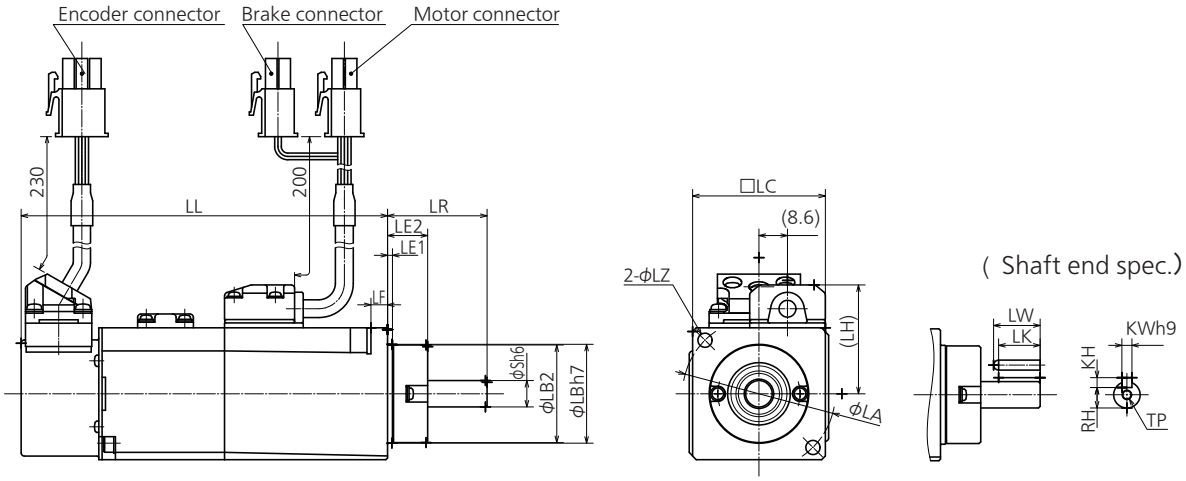

※Dimensions are subject to change. Further confirmation for dimension is required when using for design.

[Unit : mm]

MHMF series (High inertia)				
Motor output			50 W	100 W
Motor model		MHMF	5AZA1□4	01□A1□4
LL	With oil seal (With protective lip)	Without brake	62.5	76.5
		With brake	96.4	110.4
LR			30	
S			8	
LA			46	
LB1			30	
LB2			29.6	
LC			40	
LE1			1.5	
LE2			12.1	
LF			5	
LH			33	
LZ			4.3	
Key way dimensions	LW		14	
	LK		12.5	
	KW		3	
	KH		3	
	RH		6.2	
	TP		M3 depth 6	
Mass (kg)		Without brake	0.31	0.42
		With brake	0.53	0.64
Connector specifications			Refer to P.2-56 "Specifications of Motor connector"	

Caution Reduce the moment of inertia ratio if high speed response operation is required.

Related page
- P.1-29 "Check of the Model"
- P.1-34 "Check of the Combination of the Driver and the Motor"
- P.7-61 "S-T Characteristics"

MHMF 200 W to 1.0 kW (□80) (Lead wire type)

[Unit : mm]

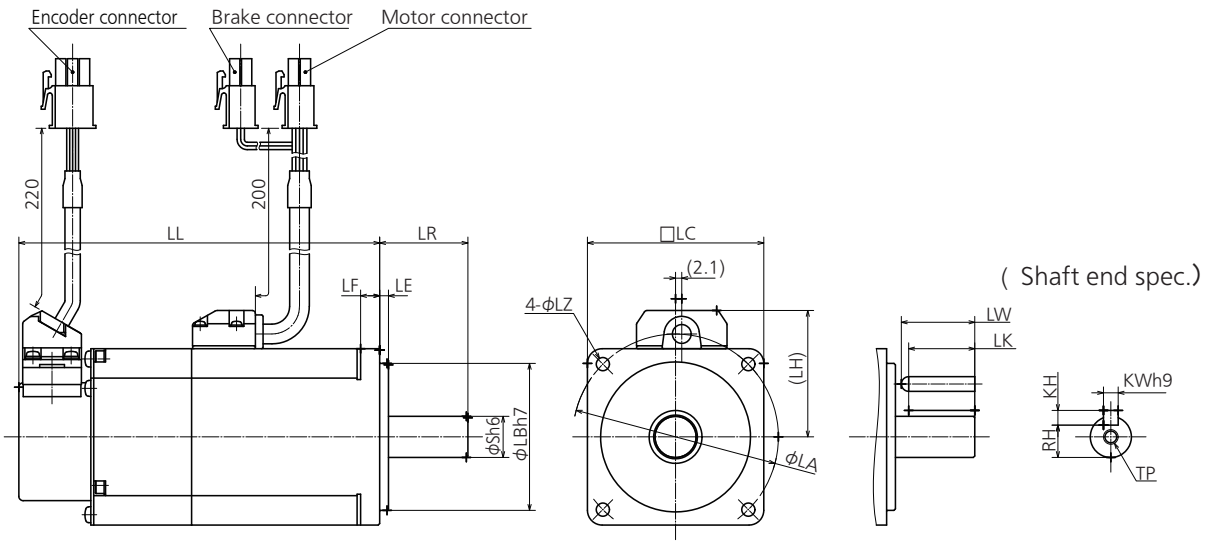

※Dimensions are subject to change. Further confirmation for dimension is required when using for design.

[Unit : mm]

MHMF series (High inertia)						
Motor output			200 W	400 W	750 W	1.0 kW
Motor model		MHMF	02□A1□2	04□A1□2	082A1□2	092A1□2
LL	Without oil seal	Without brake	76.5	93.5	100.7	113.5
		With brake	105.8	122.8	134.5	147.3
	With oil seal	Without brake	80	97	104.2	117
		With brake	109.3	126.3	138	150.8
LR			30		35	
S			11	14	19	
LA			70		90	
LB			50		70	
LC			60		80	
LE			3			
LF			6 .5		8	
LH			43		53	
LZ			4.5		6	
Key way dimensions	LW		20	25		
	LK		18	22.5	22	
	KW		4	5	6	
	KH		4	5	6	
	RH		8.5	11	15.5	
	TP		M4 depth 8	M5 depth 10		
Mass (kg)	Without oil seal	Without brake	0.75	1.1	2.2	2.7
		With brake	1.1	1.5	2.9	3.4
	With oil seal	Without brake	0.78	1.2	2.3	2.8
		With brake	1.2	1.6	3.0	3.5
Connector specifications			Refer to P.2-56 "Specifications of Motor connector"			

Caution Reduce the moment of inertia ratio if high speed response operation is required.

Related page
- P.1-29 "Check of the Model"
- P.1-34 "Check of the Combination of the Driver and the Motor"
- P.7-61 "S-T Characteristics"

MHMF 200 W to 1.0 kW(□80) (Leadwire type,with oil seal(with protect lip))

[Unit : mm]

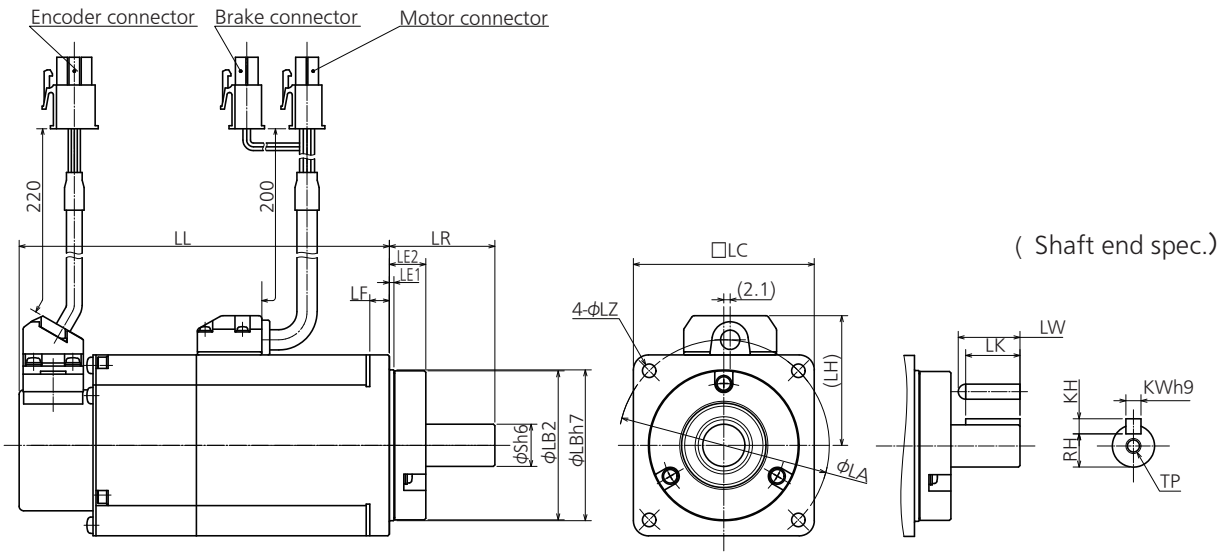

*Dimensions are subject to change. Further confirmation for dimension is required when using for design.

[Unit : mm]

MHMF series (High inertia)						
Motor output			200 W	400 W	750 W	1.0 kW
Motor model		MHMF	02□A1□4	04□A1□4	082A1□4	092A1□4
LL	With oil seal (With protective lip)	Without brake	76.5	93.5	100.7	113.5
		With brake	105.8	122.8	134.5	147.3
LR			35		40	
S			11	14	19	
LA			70		90	
LB1			50		70	
LB2			49.4		69.4	
LC			60		80	
LE1			1.5			
LE2			12.1			
LF			6 .5		8	
LH			43		53	
LZ			4.5		6	
Key way dimensions	LW		20	20.5	25	
	LK		18	18	22	
	KW		4	5	6	
	KH		4	5	6	
	RH		8.5	11	15.5	
	TP		M4 depth 8	M5 depth 10		
Mass (kg)		Without brake	0.78	1.2	2.3	2.8
		With brake	1.2	1.6	3.0	3.5
Connector specifications			Refer to P.2-56 "Specifications of Motor connector"			

Caution Reduce the moment of inertia ratio if high speed response operation is required.

Related page
- P.1-29 "Check of the Model"
- P.1-34 "Check of the Combination of the Driver and the Motor"
- P.7-61 "S-T Characteristics"

MHMF 1.0 kW to 5.0 kW (□ 130) (Encor connector JN2)

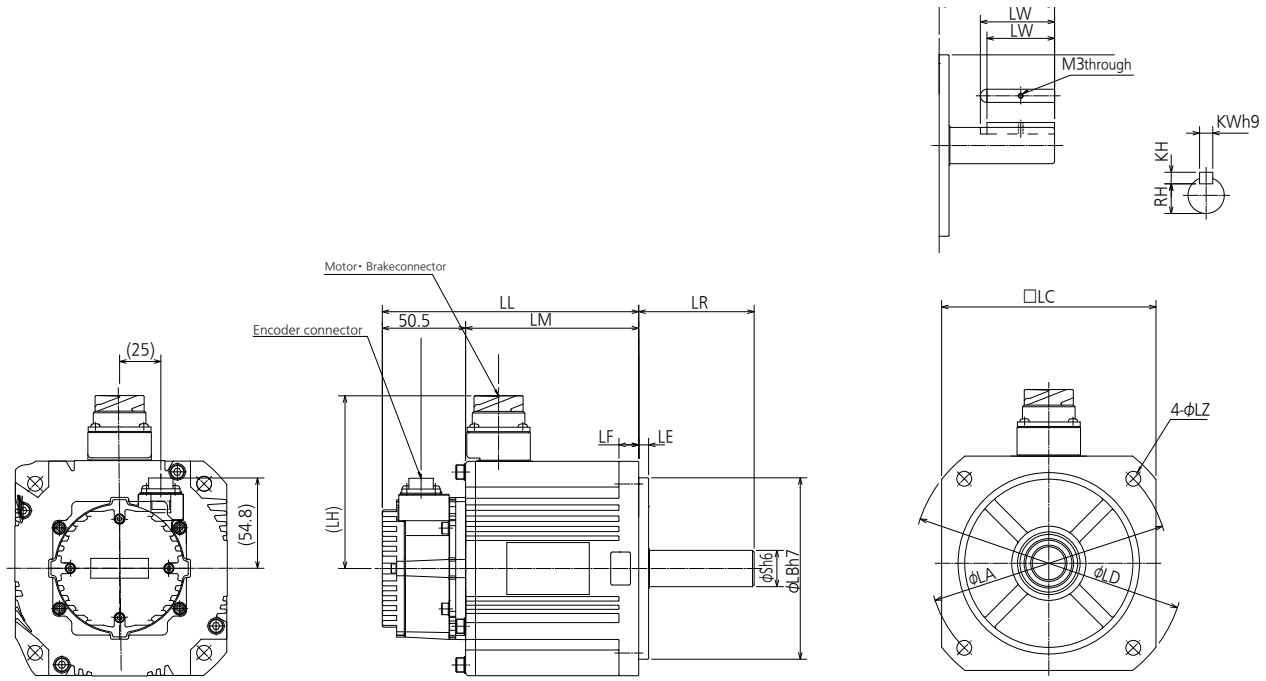

*Dimensions are subject to change. Further confirmation for dimension is required when using for design.

[Unit : mm]

MHMF series (High inertia)							
Motor output		1.0 kW	1.5 kW	2.0 kW	3.0 kW	4.0 kW	5.0 kW
Motor modle	MHMF	102A1□□	152A1□□	202A1□□	302A1□□	402A1□□	502A1□□
LL	Without brake	155.5	169.5	166.5	181.5	196	212
	With brake	183.5	197.5	195.5	210.5	225	241
LR		70		80			
S		22		35			
LA		145		200			
LB		110		114.3			
LC		130		176			
LD		165		233			
LE		6		3.2			
LF		12		18			
LH	Without brake	105		140			
	With brake	116		140			
LM	Without brake	105	119	116	131	145.5	161.5
	With brake	133	147	145	160	174.5	190.5
LZ		9		13.5			
Key way dimensions	LW	45		55			
	LK	41		50			
	KW	8		10			
	KH	7		8			
	RH	18		30			
Mass (kg)	Without brake	6.1	7.7	11.3	13.8	16.2	19.6
	With brake	7.6	9.2	14.6	17.2	19.4	22.8
Connector specifications		Refer to P.2-56 “Specifications of Motor connector”					

Caution Reduce the moment of inertia ratio if high speed response operation is required.

Related page
- P.1-29 “Check of the Model”
- P.1-34 “Check of the Combination of the Driver and the Motor”
- P.7-61 “S-T Characteristics”

MHMF 200 W to 1.0 kW(□80)(400 V)

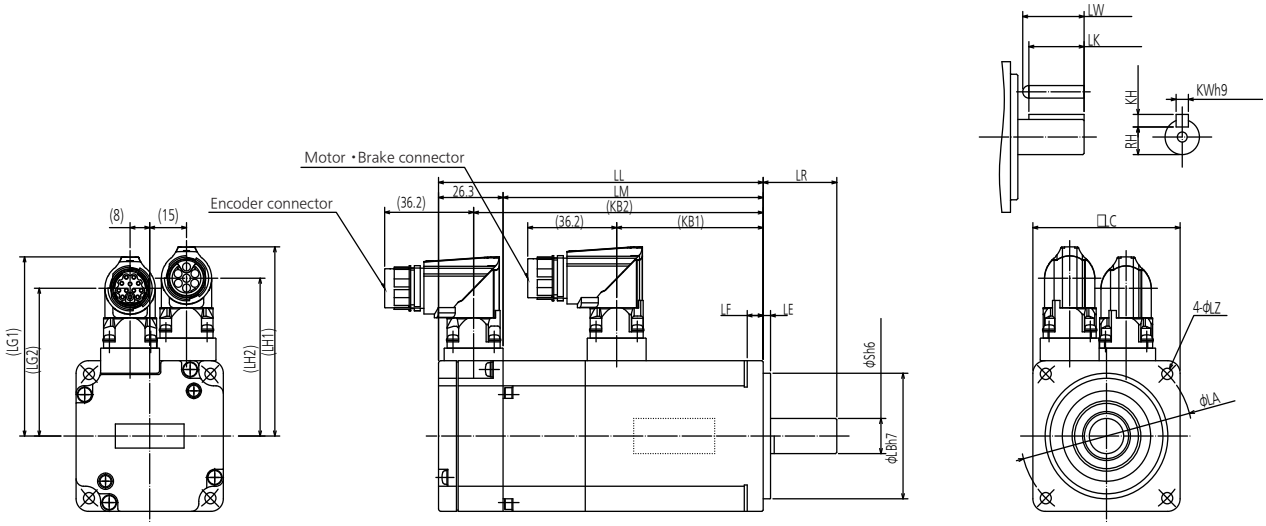

*Dimensions are subject to change. Further confirmation for dimension is required when using for design.

[Unit : mm]

MHMF series (High inertia)						
Motor output			200 W	400 W	750 W	1.0 kW
Motor modle		MHMF	024□1□9M	044□1□9M	084□1□9M	094□1□9M
LL		Without brake	85.8	102.8	109.9	122.7
		With brake	115.3	132.3	143.5	156.3
LR			30		35	
S			11	14	19	
LA			70		90	
LB			50		70	
LC			60		80	
LE			3			
LF			6.5		8	
LH1			75.3		85.3	
LH2			62.8		72.8	
LG1			71.3		76.3	
LG2			58.8		63.8	
LM		Without brake	59.5	76.5	83.6	96.4
		With brake	89	106	117.2	130
KB1			42.7	59.7	67.5	78.5
KB2		Without brake	71.5	88.5	95.6	108.4
		With brake	101	118	129.2	142
LZ			4.5		6.2	
Key way dimensions	LW		20	25		
	LK		18	22.5	22	
	KW		4	5	6	
	KH		4	5	6	
	RH		8.5	11	15.5	
	TP		M4 depth 8	M5 depth 10		
Mass (kg)		Without brake	1.1	1.4	2.4	2.8
		With brake	1.4	1.8	3.2	3.6
Connector specifications			Refer to P.2-56 "Specifications of Motor connector"			

Caution Reduce the moment of inertia ratio if high speed response operation is required.

Related page
- P.1-29 "Check of the Model"
- P.1-34 "Check of the Combination of the Driver and the Motor"
- P.7-61 "S-T Characteristics"

Note
1) 400 V specification motors are not sold in Japan.
In addition, 400 V specification motors purchased outside Japan and equipment equipped with 400 V specification motors cannot be brought into Japan.

MHMF 1.0 kW(□130) to 5.0 kW(400 V)

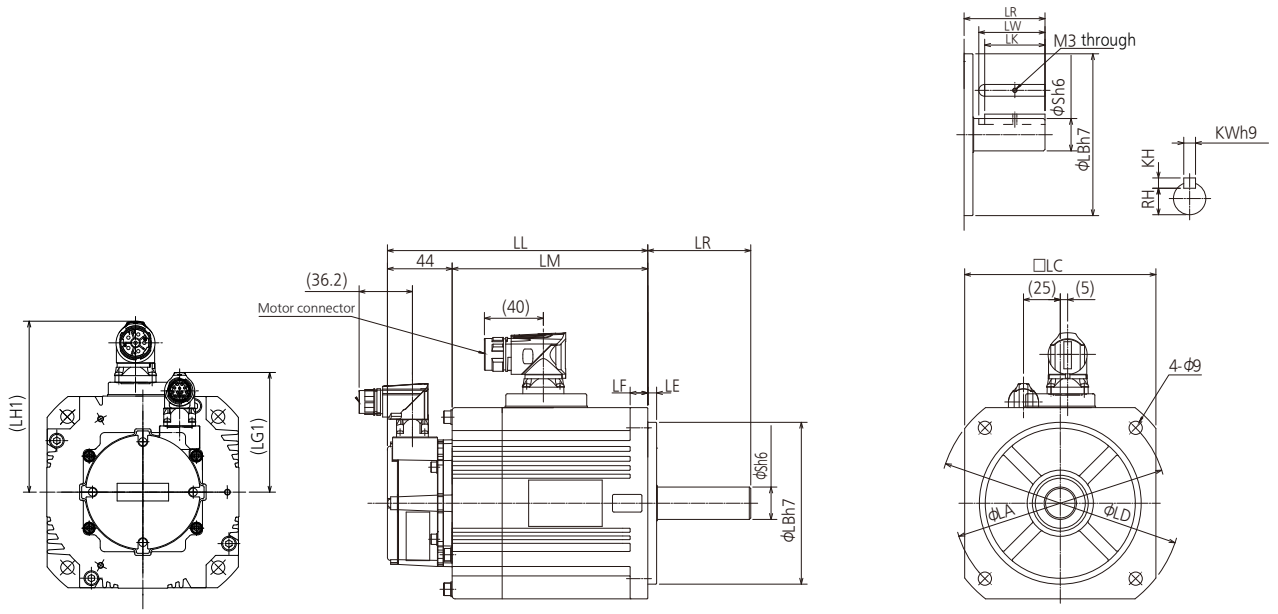

*Dimensions are subject to change. Further confirmation for dimension is required when using for design.

[Unit : mm]

MHMF series (H inertia)							
Motor output		1.0 kW	1.5 kW	2.0 kW	3.0 kW	4.0 kW	5.0 kW
Motor modle	MHMF	104A1□□M	154A1□□M	204A1□□M	304A1□□M	404A1□□M	504A1□□M
LL	Without brake	155.5	169.5	169.5	184.5	199.0	215.0
	With brake	183.5	197.5	198.5	213.5	228.0	244.0
LR		70		80			
S		22		35			
LA		145		200			
LB		110		114.3			
LC		130		176			
LD		165		233			
LE		6		3.2			
LF		12		18			
LH1		116.2		139.2			
LG1		81.3					
LM	Without brake	105	119		134	148.5	164.5
	With brake	133	147	148	163	177.5	193.5
KB1		71	85	80.5	95.5	110	126
KB2	Without brake	132	146		161	175.5	191.5
	With brake	160	174	175	190	204.5	220.5
LZ		9		13.5			
Key way dimensions	LW	45		55			
	LK	41		50			
	KW	8		10			
	KH	7		8			
	RH	18		30			
Mass (kg)	Without brake	6.1	7.7	11.3	13.8	16.2	19.6
	With brake	7.6	9.2	14.6	17.2	19.4	22.8
Connector specifications		Refer to P.2-56 "Specifications of Motor connector"					

Caution Reduce the moment of inertia ratio if high speed response operation is required.

Related page
- P.1-29 "Check of the Model"
- P.1-34 "Check of the Combination of the Driver and the Motor"
- P.7-61 "S-T Characteristics"

Note 1) 400 V specification motors are not sold in Japan.
In addition, 400 V specification motors purchased outside Japan and equipment equipped with 400 V specification motors cannot be brought into Japan.

8. Options

Noise Filter

When you install one noise filter at the power supply for multi-axes application, contact to a manufacture of the noise filter. If noise margin is required, connect 2 filters in series to emphasize effectiveness.

- Options

Option part No.	Voltage specifications for driver	Manufacturer's part No.	Applicable driver (frame)	Manufacturer
DV0P4170	Single phase 100 V, 200 V	SUP-EK5-ER-6	A and B-frame	Okaya Electric Ind.

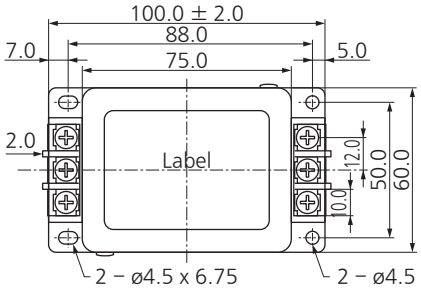

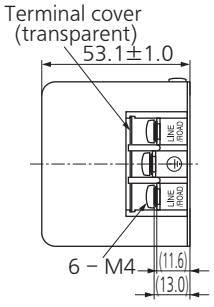

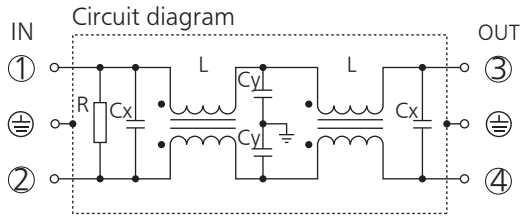

[Unit: mm]

Option part No.	Voltage specifications for driver	Manufacturer's part No.	Applicable driver (frame)	Manufacturer
DV0PM20042	3-phase 200 V	3SUP-HU10-ER-6	A and B-frame	Okaya Electric Ind.
	Single phase 100 V, 200 V 3-phase 200 V		C-frame	
DV0P4220	Single/3-phase 200 V	3SUP-HU30-ER-6	D-frame	
DV0PM20043	3-phase 200 V	3SUP-HU50-ER-6	E-frame	

[DV0PM20042, DV0P4220]

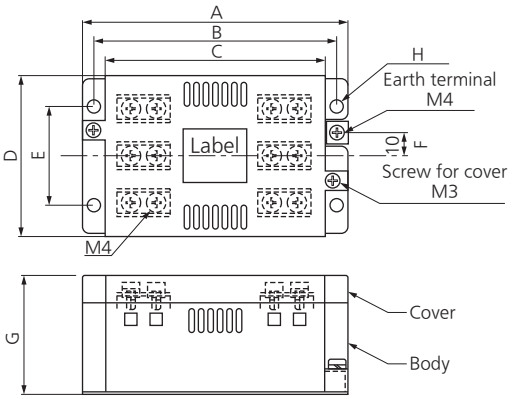

[DV0PM20043]

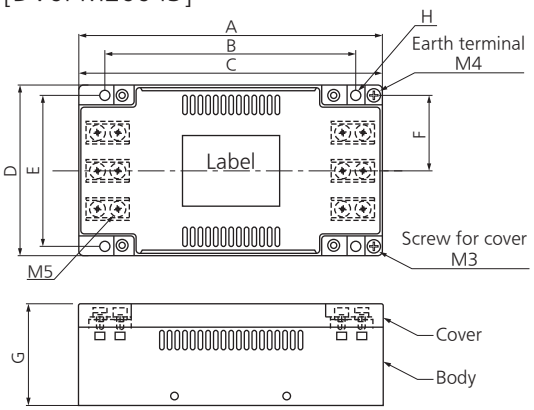

[Size] [Unit: mm]

	A	B	C	D	E	F	G	H
DV0PM20042	115	105	95	70	43	10	52	5.5
DV0P4220	145	135	125	70	50	10	52	5.5
DV0PM20043	165	136	165	90	80	40	54	5.5

Circuit diagram

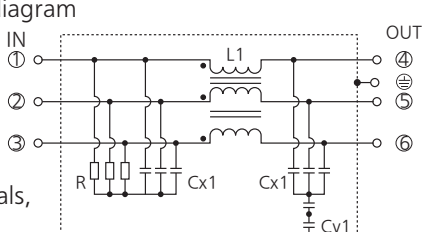

For single phase application, use 2 terminals among 3 terminals, leaving the remaining terminal unconnected.

Related page
- P.2-4 “Conformance to international standards”
- P.2-12 “Driver and List of Applicable Peripheral Equipments”

Option part No.	Voltage specifications for driver	Manufacturer's part No.	Applicable driver (frame)	Manufacturer
DV0P3410	3-phase 200 V	3SUP-HL50-ER-6B	F-frame	Okaya Electric Ind.

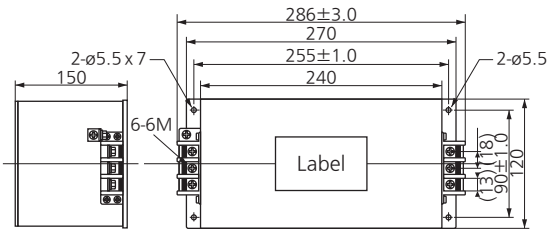

[Unit: mm]

Circuit diagram

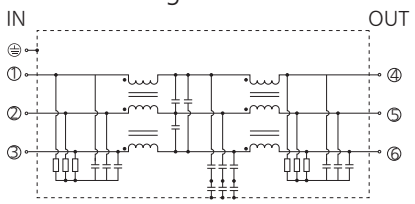

- Recommended components

Part No.	Voltage specifications for driver	Current rating (A)	Applicable driver (frame)	Manufacturer
RTHN-5010	Single phase 100 V, 200 V 3-phase 200 V	10	A, B, C-frame	TDK-Lambda Corp.
RTHN-5030		30	D-frame	
RTHN-5050		50	E, F-frame	
HF3080C-SZA	3-phase 200 V	80	G-frame	Soshin Electronics Co.,Ltd
	3-phase 400 V		H-frame	
HF3100C-SZA	3-phase 200 V	100	H-frame	
FN3258-16-44	3-phase 400 V	16	D,E-frame	Schaffner EMC, Inc
FN3258-30-33		30	F-frame	
HF3040C-SZC		40	G-frame	Soshin Electronics Co.,Ltd

[RTHN-5010]

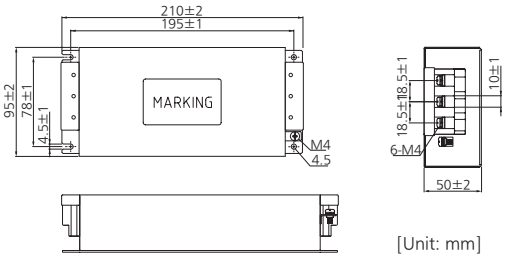

[Unit: mm]

[RTHN-5030]

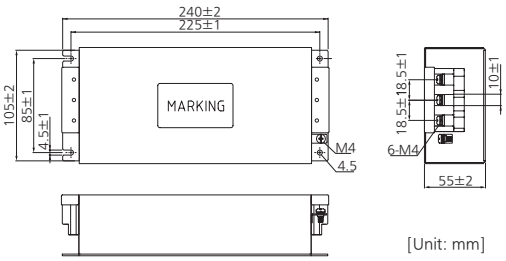

[Unit: mm]

[RTHN-5050]

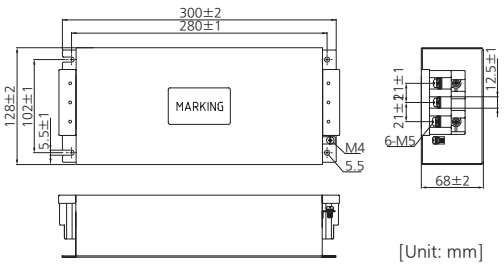

[Unit: mm]

<HF3080C-SZA / HF3100C-SZA>

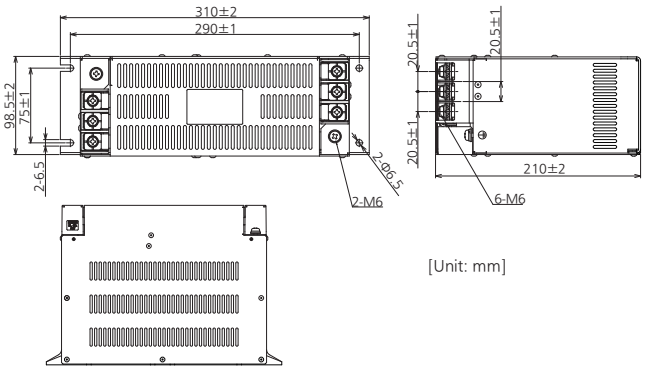

[Unit: mm]

Remarks

- Select a noise filter of capacity that exceeds the capacity of the power source (also check for load condition).
- For detailed specification of the filter, contact the manufacturer.

Caution

Use options correctly after reading operation manuals of the options to better understand the precautions.
Take care not to apply excessive stress to each optional part.

〈FN3258(H)-16-44〉

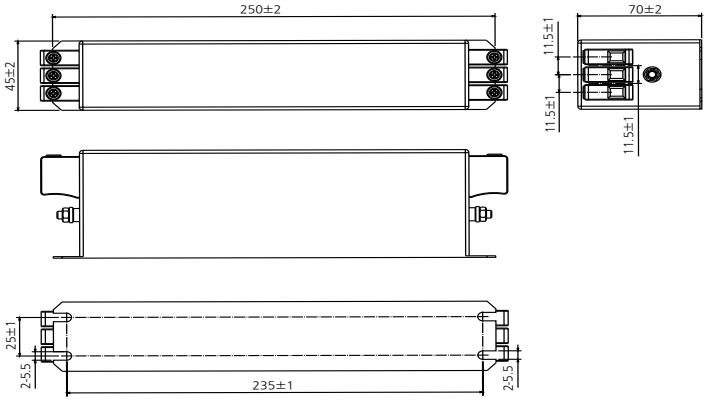

〈FN3258(H)-30-33〉

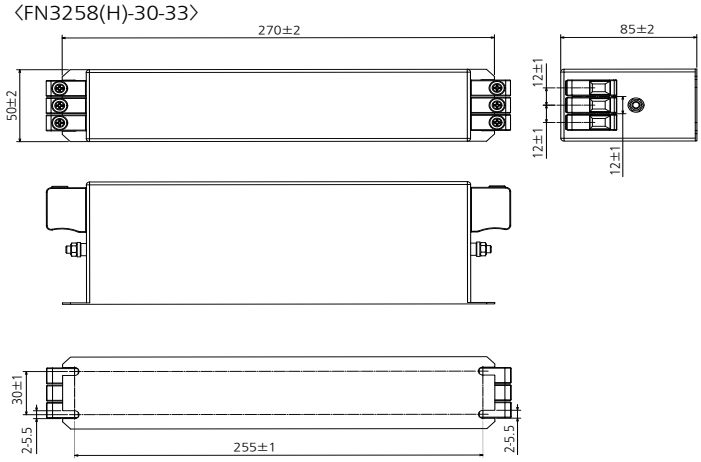

〈HF3040C-SZC〉

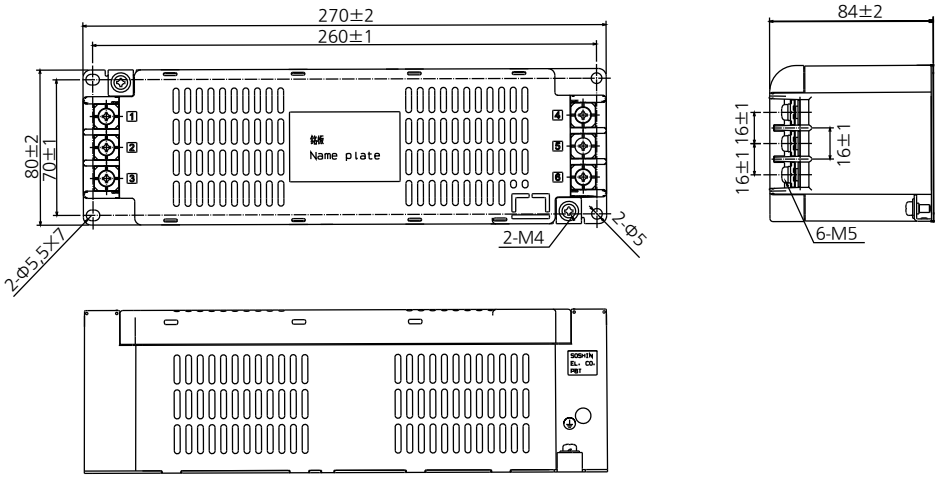

Remarks

- Select a noise filter of capacity that exceeds the capacity of the power source (also check for load condition).
- For detailed specification of the filter, contact the manufacturer.

Caution

Use options correctly after reading operation manuals of the options to better understand the precautions.
Take care not to apply excessive stress to each optional part.

8. Options

Surge Absorber

Provide a surge absorber for the primary side of noise filter.

Option part No.	Voltage specifications for driver	Manufacturer's part No.	Manufacturer
DV0P1450	3-phase 200 V	R・A・V-781BXZ-4	Okaya Electric Ind.
DV0PM20050	3-phase400 V	R・A・V-801BXZ-4	

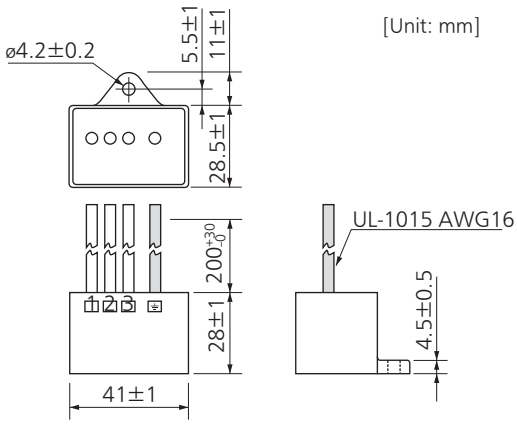

[Unit: mm]

Circuit diagram

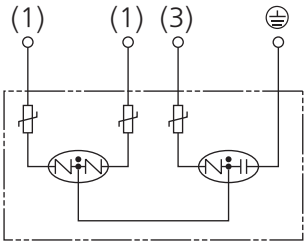

Option part No.	Voltage specifications for driver	Manufacturer's part No.	Manufacturer
DV0P4190	Single phase 100 V, 200 V	R・A・V-781BWZ-4	Okaya Electric Ind.

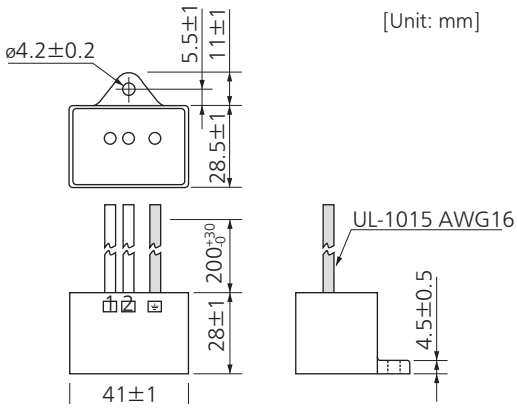

[Unit: mm]

Circuit diagram

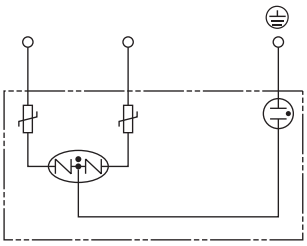

Remarks Take off the surge absorber when you execute a dielectric test to the machine or equipment, or it may damage the surge absorber.

Related page
- P.2-4 “Conformance to international standards”
- P.2-12 “Driver and List of Applicable Peripheral Equipments”

8. Options

Ferrite core

Install ferrite core for signal lines to all cables (power cable, motor cable, encoder cable and interface cable)

- Options

<24 V Power cable, Motor cable, Encoder cable, Interface cable, USB cable>

Option part No.	Manufacturer's part No.	Manufacturer
DV0P1460	ZCAT3035-1330	TDK Corp.

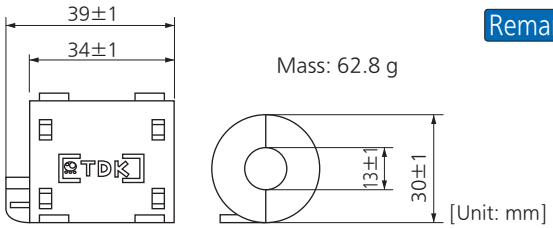

Remarks To connect the noise filter to the connector XB connection cable, adjust the sheath length at the tip of the cable, as required.

- Recommended components

<Power cable>

Applicable(driver frame)	Part No.	Manufacturer
G-frame, H-frame	RJ8095	KK-CORP.CO.JP

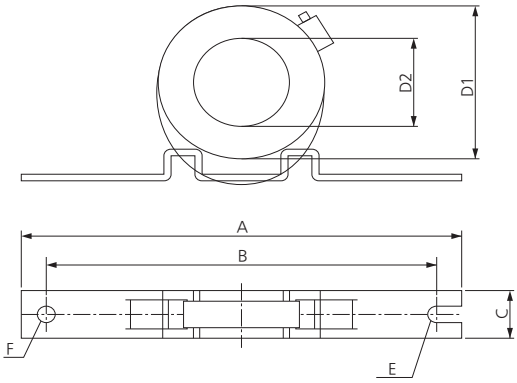

Part No.	Current value	100 kHz (μH)	Dimension [Unit:mm]							
			A	B	C	D1	D2	Core thickness	E	F
RJ8035	35 A	9.9±3	170	150	23	80	53	24	R3.5	7
RJ8095	95 A	7.9±3	200	180	34	130	107	35	R3.5	7

<Power cable>

Applicable(driver frame)	Part No.	Manufacturer
G-frame, H-frame	T400-61D	MICROMETALS

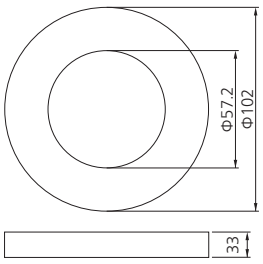

[Unit: mm]

Remarks Fix the signal line ferrite core in place to eliminate excessive stress to the cables.

8. Options

Junction Cable for Encoder

Part No.	MFECA0 * * 0EAE	Compatible motor output	MSMF 50 W to 1.0 kW(□80) MQMF 100 W to 400 W MHMF 50 W to 1.0 kW(□80) (Leadwire type)
Specifications	For encode With battery box		

[Unit: mm]

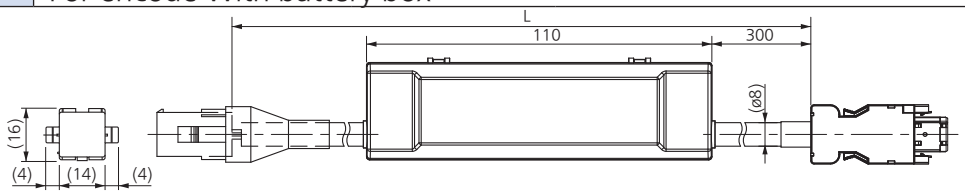

Title	Part No.	Manufacturer
Connector (Driver side)	3E206-0100 KV	Sumitomo 3M (or equivalent)
Shell kit	3E306-3200-008	
Connector (Motor side)	172161-1	Japan Aviation Electronics Ind.
Connector pin	170365-1	
Cable	0.20 mm²× 4P (8-wire)	Hitachi Electric Cable Co., Ltd.

L (m)	Part No.
$3^{+0.26}_{-0.00}$	MFECA0030EAE
$5^{+0.30}_{-0.00}$	MFECA0050EAE
$10^{+0.40}_{-0.00}$	MFECA0100EAE
$20^{+0.60}_{-0.00}$	MFECA0200EAE

Part No.	MFECA0 * * 0EAD	Compatible motor output	MSMF 50 W to 1.0 kW(□80) MQMF 100 W to 400 W MHMF 50 W to 1.0 kW(□80) (Leadwire type)
Specifications	For encode Without battery box		

[Unit: mm]

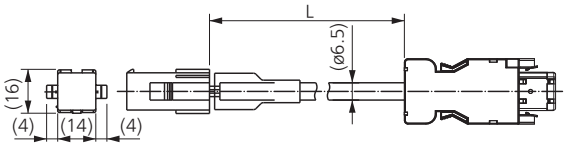

Title	Part No.	Manufacturer
Connector (Driver side)	3E206-0100 KV	Sumitomo 3M (or equivalent)
Shell kit	3E306-3200-008	
Connector (Motor side)	172161-1	Japan Aviation Electronics Ind.
Connector pin	170365-1	
Cable	0.20 mm²× 3P (6-wire)	Hitachi Electric Cable Co., Ltd.

L(m)	Part No.
$3^{+0.26}_{-0.00}$	MFECA0030EAD
$5^{+0.30}_{-0.00}$	MFECA0050EAD
$10^{+0.40}_{-0.00}$	MFECA0100EAD
$20^{+0.60}_{-0.00}$	MFECA0200EAD *1

*1. Cable with a length of 20m cannot be used for batteryless absolute motors.
Consult with a dealer or distributor if necessary.

Caution Option cable does not conform to IP65 and IP67.

Related page • P.2-56 "Specifications of Motor connector"

Part No.	MFECA0**0MJD (Highly bendable type, Direction of motor shaft) MFECA0**0MKD (Highly bendable type, Opposite direction of motor shaft) MFECA0**0TJD (Standard bendable type, Direction of motor shaft) MFECA0**0TKD (Standard bendable type, Opposite direction of motor shaft)	Compatible motor output	MSMF 50 W to 1.0 kW(□80) MQMF 100 W to 400 W MHMF 50 W to 1.0kW(□80) (Connector type)
Specifications	For encode Without battery box		

[Unit: mm]

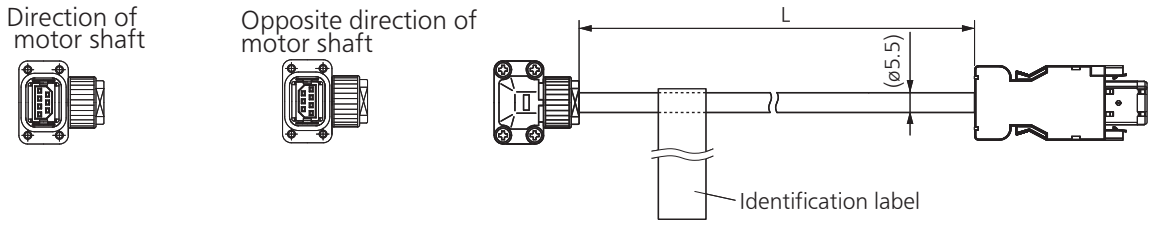

Title	Part No.	Manufacturer
Connector (Driver side)	3E206-0100 KV	Sumitomo 3M (or equivalent)
Shell kit	3E306-3200-008	
Connector (Motor side)	JN6FR07SM1	Japan Aviation Electronics Ind.
Connector pin	LY10-C1-A1-10000	
Cable	AWG24× 4P, AWG22× 2P	Hitachi Electric Cable Co., Ltd.

L (m)	Part No.
$3^{+0.26}_{-0.00}$	MFECA0030MJD
$5^{+0.30}_{-0.00}$	MFECA0050MJD
$10^{+0.40}_{-0.00}$	MFECA0100MJD
$20^{+0.60}_{-0.00}$	MFECA0200MJD

Part No.	MFECA0**0MJE (Highly bendable type, Direction of motor shaft) MFECA0**0MKE (Highly bendable type, Opposite direction of motor shaft) MFECA0**0TJE (Standard bendable type, Direction of motor shaft) MFECA0**0TKE (Standard bendable type, Opposite direction of motor shaft)	Compatible motor output	MSMF 50 W~1.0 kW(□80) MQMF 100 W~400 W MHMF 50 W~1.0 kW(□80) (Connector type)
Specifications	For encode With battery box		

[Unit: mm]

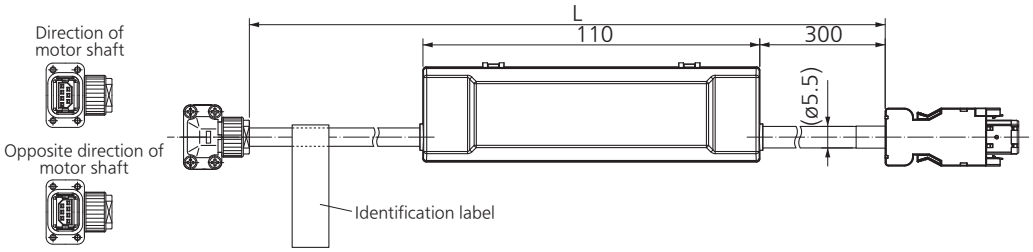

Title	Part No.	Manufacturer
Connector (Driver side)	3E206-0100 KV	Sumitomo 3M (or equivalent)
Shell kit	3E306-3200-008	
Connector (Battery side)	ZMR-02	J.S.T Mfg. Co., Ltd.
Connector pin	SMM-003T-P0.5	
Connector (Motor side)	JN6FR07SM1	Japan Aviation Electronics Ind.
Connector pin	LY10-C1-A1-10000	
Cable	AWG24× 4P, AWG22× 2P	Hitachi Electric Cable Co., Ltd.

L (m)	Part No.
$3^{+0.26}_{-0.00}$	MFECA0030MJE
$5^{+0.30}_{-0.00}$	MFECA0050MJE
$10^{+0.40}_{-0.00}$	MFECA0100MJE
$20^{+0.60}_{-0.00}$	MFECA0200MJE

Caution Option cable does not conform to IP65 and IP67.

Part No.	MFECA0**0EPD	Compatible motor output	MSMF 1.0 kW(□100) to 5.0 kW MDMF 1.0 kW to 5.0 kW MHMF 1.0 kW(□130) to 5.0 kW MGMF 0.85 kW to 4.4 kW
Specifications	For encode Without battery box(JL10 One-touch lock type)		

[Unit: mm]

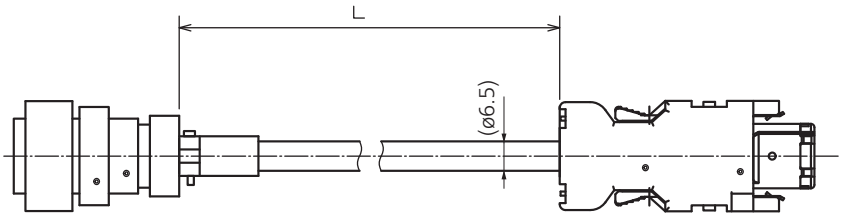

Title	Part No.	Manufacturer
Connector (Driver side)	3E206-0100 KV	Sumitomo 3M (or equivalent)
Shell kit	3E306-3200-008	
Connector (Motor side)	JL10-6A20-29S-EB	Japan Aviation Electronics Ind.
Connector pin	JL04-2022CK(09)-R	
Cable	0.2 mm2 × 3P (6-wire)	Oki Electric Cable Co., Ltd.

L (m)	Part No.
$3^{+0.26}_{-0.00}$	MFECA0030EPD
$5^{+0.30}_{-0.00}$	MFECA0050EPD
$10^{+0.40}_{-0.00}$	MFECA0100EPD
$20^{+0.60}_{-0.00}$	MFECA0200EPD

Part No.	MFECA0**0EPE	Compatible motor output	MSMF 1.0 kW(□100) to 5.0 kW MDMF 1.0 kW to 5.0 kW MHMF 1.0 kW(□130) to 5.0 kW MGMF 0.85 kW to 4.4 kW
Specifications	For encode With battery box(JL10 One-touch lock type)		

[Unit: mm]

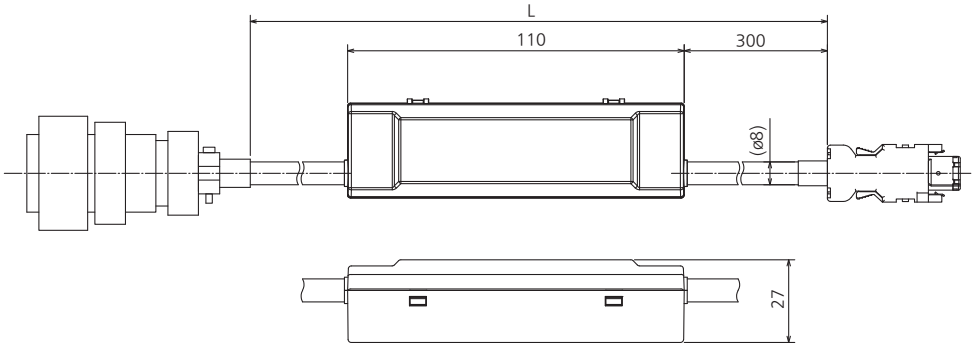

Title	Part No.	Manufacturer
Connector (Driver side)	3E206-0100 KV	Sumitomo 3M (or equivalent)
Shell kit	3E306-3200-008	
Connector (Battery side)	ZMR-02	J.S.T Mfg. Co., Ltd.
Connector pin	SMM-003T-P0.5	
Connector (Motor side)	JL10-6A20-29S-EB	Japan Aviation Electronics Ind.
Connector pin	JL04-2022CK(09)-R	
Cable	0.2 mm² × 4P (8-wire)	Oki Electric Cable Co., Ltd.

L (m)	Part No.
$3^{+0.26}_{-0.00}$	MFECA0030EPE
$5^{+0.30}_{-0.00}$	MFECA0050EPE
$10^{+0.40}_{-0.00}$	MFECA0100EPE
$20^{+0.60}_{-0.00}$	MFECA0200EPE

Caution Option cable does not conform to IP65 and IP67.

Part No.	MFECA0**0ESD	Compatible motor output	MSMF 1.0 kW(□100) to 5.0 kW MDMF 1.0 kW to 5.0 kW MHMF 1.0 kW(□130) to 5.0 kW MGMF 0.85 kW to 4.4 kW
Specifications	For encode Without battery box(screwed type)		

[Unit: mm]

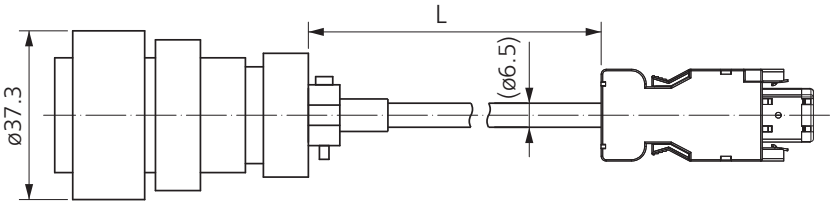

Title	Part No.	Manufacturer
Connector (Driver side)	3E206-0100 KV	Sumitomo 3M (or equivalent)
Shell kit	3E306-3200-008	
Connector (Motor side)	JL10-6A20-29S	Japan Aviation Electronics Ind.
Cable clamp	N/MS3057-12A	
Cable	0.2 mm2 × 3P (6-wire)	Oki Electric Cable Co., Ltd.

L (m)	Part No.
$3^{+0.26}_{-0.00}$	MFECA0030ESD
$5^{+0.30}_{-0.00}$	MFECA0050ESD
$10^{+0.40}_{-0.00}$	MFECA0100ESD
$20^{+0.60}_{-0.00}$	MFECA0200ESD

Part No.	MFECA0**0ESE	Compatible motor output	MSMF 1.0 kW(□100) to 5.0 kW MDMF 1.0 kW to 5.0 kW MHMF 1.0 kW(□130) to 5.0 kW MGMF 0.85 kW to 4.4 kW
Specifications	For encode With battery box(screwed type)		

[Unit: mm]

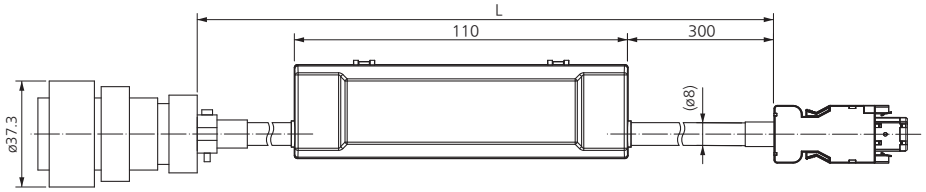

Title	Part No.	Manufacturer
Connector (Driver side)	3E206-0100 KV	Sumitomo 3M (or equivalent)
Shell kit	3E306-3200-008	
Connector (Motor side)	JL10-6A20-29S	Japan Aviation Electronics Ind.
Cable clamp	N/MS3057-12A	
Cable	0.2 mm2 × 4P (6-wire)	Oki Electric Cable Co., Ltd.

L (m)	Part No.
$3^{+0.26}_{-0.00}$	MFECA0030ESE
$5^{+0.30}_{-0.00}$	MFECA0050ESE
$10^{+0.40}_{-0.00}$	MFECA0100ESE
$20^{+0.60}_{-0.00}$	MFECA0200ESE

Caution Option cable does not conform to IP65 and IP67.

Part No.	MFECA0**0ETD	Compatible motor output	MSMF 1.0 kW(□100) to 5.0 kW MDMF 1.0 kW to 5.0 kW MHMF 1.0 kW(□130) to 5.0 kW MGMF 0.85 kW to 4.4 kW
Specifications	For encode Without battery box(JN2 One-touch lock type)		

[Unit: mm]

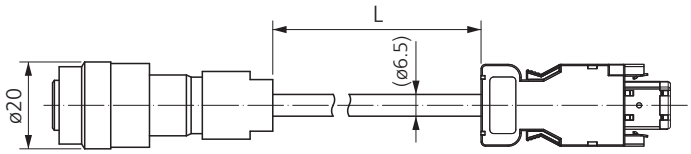

Title	Part No.	Manufacturer
Connector (Driver side)	3E206-0100 KV	Sumitomo 3M (or equivalent)
Shell kit	3E306-3200-008	
Connector (Motor side)	JN2DS10SL1-R	Japan Aviation Electronics Ind.
Connector pin	JN1-22-22S-PKG100	
Cable	0.2 mm² × 3P	Oki Electric Cable Co., Ltd.

L (m)	Part No.
$3^{+0.26}_{-0.00}$	MFECA0030ETD
$5^{+0.30}_{-0.00}$	MFECA0050ETD
$10^{+0.40}_{-0.00}$	MFECA0100ETD
$20^{+0.60}_{-0.00}$	MFECA0200ETD *1

*1. Cable with a length of 20m cannot be used for batteryless absolute motors. Consult with a dealer or distributor if necessary.

Part No.	MFECA0**0ETE	Compatible motor output	MSMF 1.0 kW(□100) to 5.0 kW MDMF 1.0 kW to 5.0 kW MHMF 1.0 kW(□130) to 5.0 kW MGMF 0.85 kW to 4.4 kW
Specifications	For encode With battery box(JN2 One-touch lock type)		

[Unit: mm]

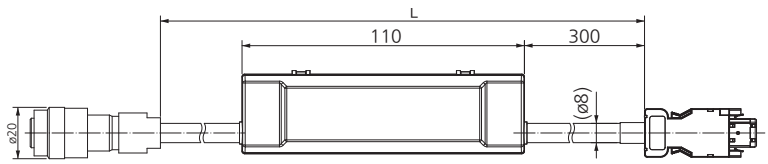

Title	Part No.	Manufacturer
Connector (Driver side)	3E206-0100 KV	Sumitomo 3M (or equivalent)
Shell kit	3E306-3200-008	
Connector (Battery side)	ZMR-02	J.S.T Mfg. Co., Ltd.
Connector pin	SMM-003T-P0.5	
Connector (Motor side)	JN2DS10SL1-R	Japan Aviation Electronics Ind.
Connector pin	JN1-22-22S-PKG100	
Cable	0.2 mm² × 3P	Oki Electric Cable Co., Ltd.

L (m)	Part No.
$3^{+0.26}_{-0.00}$	MFECA0030ETE
$5^{+0.30}_{-0.00}$	MFECA0050ETE
$10^{+0.40}_{-0.00}$	MFECA0100ETE
$20^{+0.60}_{-0.00}$	MFECA0200ETE

Caution Option cable does not conform to IP65 and IP67.

8 . Options

Junction Cable for Motor (Without brake)

Part No.	MFMCA0 **0EED	Applicable model	MSMF 50 W to 1.0 kW(□80) MQMF 100 W to 400 W MHMF 50 W to 1.0 kW(□80) (Leadwire type)

[Unit: mm]

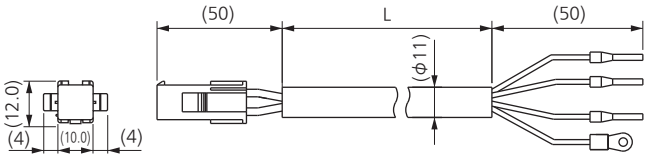

Title	Part No.	Manufacturer
Connector	172159-1	Tyco Electronics
Connector pin	170366-1	
Rod terminal	AI0.75-8GY	Phoenix Contact
Nylon insulated round terminal	N1.25-M4	J.S.T Mfg. Co., Ltd.
Cable	ROBO-TOP 600 V 0.75 mm² 4-wire type	Daiden Co.,Ltd.

L (m)	Part No.
$3^{+0.26}_{-0.00}$	MFMCA0030EED
$5^{+0.30}_{-0.00}$	MFMCA0050EED
$10^{+0.40}_{-0.00}$	MFMCA0100EED
$20^{+0.60}_{-0.00}$	MFMCA0200EED

Part No.		Applicable model	
	MFMCA0**0NJD (Highly bendable type, Direction of motor shaft)		MSMF 50 W to 1.0 kW(□80) (Connector type)
	MFMCA0**0NKD(Highly bendable type, Opposite direction of motor shaft)		
	MFMCA0**0RJD (Standard bendable type, Direction of motor shaft)		
	MFMCA0**0RKD (Standard bendable type, Opposite direction of motor shaft)		

[Unit: mm]

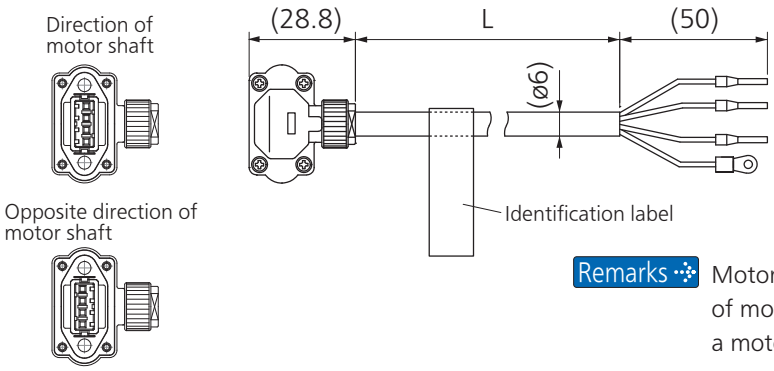

Remarks Motor cable for opposite direction of motor shaft cannot be used with a motor 50 W and 100 W.

Title	Part No.	Manufacturer
Connector	JN8FT04SJ1	Japan Aviation Electronics Ind.
Connector pin	ST-TMH-S-C1B-3500	
Rod terminal	AI0.75-8GY	Phoenix Contact
Nylon insulated round terminal	N1.25-M4	J.S.T Mfg. Co., Ltd.
Cable	AWG18 4-wire	Hitachi Electric Cable Co., Ltd.

L (m)	Part No.
$3^{+0.26}_{-0.00}$	MFMCA0030NJD
$5^{+0.30}_{-0.00}$	MFMCA0050NJD
$10^{+0.40}_{-0.00}$	MFMCA0100NJD
$20^{+0.60}_{-0.00}$	MFMCA0200NJD

Caution Option cable does not conform to IP65 and IP67.

Related page
- P.2-56 “Specifications of Motor connector”

Part No.	MFMCA0 ** 7UFD(Highly/Standard bendable type, Direction of motor shaft) MFMCA0 ** 7UGD (Highly/Standard bendable type, Opposite direction of motor shaft)	Applicable model	MHMF 50 W, 100 W (Connector type)

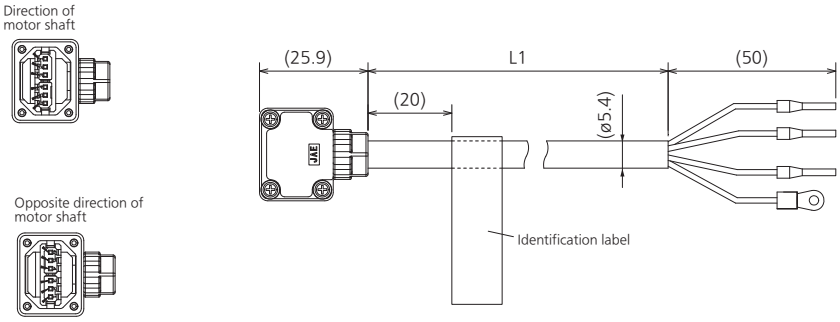

[Unit: mm]

Title	Part No.	Manufacturer
Connector	JN11FH06SN2	Japan Aviation Electronics Ind.
Connector pin	JN11S10K4A1	
Rod terminal	AI0.34-8TQ	Phoenix Contact
Nylon insulated round terminal	N1.25-M4	J.S.T Mfg. Co., Ltd.
Cable	AWG22 6-wire	Nikko Electronics Wire Co., Ltd.

L (m)	Part No.
$3^{+0.26}_{-0.00}$	MFMCA0037UFD
$5^{+0.30}_{-0.00}$	MFMCA0057UFD
$10^{+0.40}_{-0.00}$	MFMCA0107UFD
$20^{+0.60}_{-0.00}$	MFMCA0207UFD

Part No.	MFMCA0 ** 0UFD (Highly bendable type, Direction of motor shaft) MFMCA0 ** 0UGD (Highly bendable type, Opposite direction of motor shaft) MFMCA0 ** 0WFD(Standard bendable type, Direction of motor shaft) MFMCA0 ** 0WGD(Standard bendable type, Opposite direction of motor shaft)	Applicable model	MQMF 100 W to 400 W MHMF 200 W to 1.0 kW(□80) (Connector type)

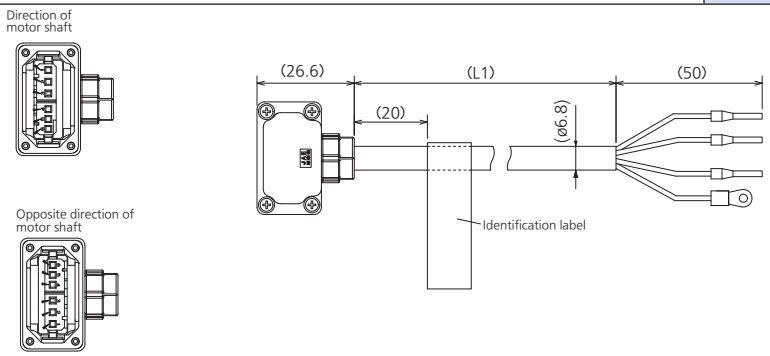

[Unit: mm]

Title	Part No.	Manufacturer
Connector	JN11FH06SN1	Japan Aviation Electronics Ind.
Cable clamp	JN11S35H3A1	
Rod terminal	AI0.75-8GY	Phoenix Contact
Nylon insulated round terminal	N1.25-M4	J.S.T Mfg. Co., Ltd.
Cable	AWG18 6-wire	Nikko Electronics Wire Co., Ltd.

L (m)	Part No.
$3^{+0.26}_{-0.00}$	MFMCA0030UFD
$5^{+0.30}_{-0.00}$	MFMCA0050UFD
$10^{+0.40}_{-0.00}$	MFMCA0100UFD
$20^{+0.60}_{-0.00}$	MFMCA0200UFD

Caution Option cable does not conform to IP65 and IP67.

Related page
- P.2-56 "Specifications of Motor connector"

Part No.	MFMCD0**2EUD	Applicable model	MSMF 1.0 kW(□100) to 2.0 kW, MDMF 1.0 kW to 2.0 kW MHMF 1.0 kW(□130) to 1.5 kW, MGMF 0.85 kW to 1.8 kW (One-touch lock type)

[Unit: mm]

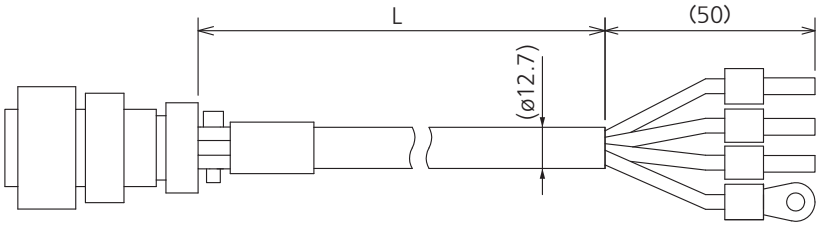

Title	Part No.	Manufacturer
Connector	JL10-6A20-4SE-EB	Japan Aviation Electronics Ind.
Connector pin	JL04-2022CK(14)-R	
Rod terminal	NTUB-2	J.S.T Mfg. Co., Ltd.
Nylon insulated round terminal	N2-M4	J.S.T Mfg. Co., Ltd.
Cable	ROBO-TOP 600 V 2.0 mm² 4-wire	Dyden Corporation

L (m)	Part No.
$3^{+0.26}_{-0.00}$	MFMCD0032EUD
$5^{+0.30}_{-0.00}$	MFMCD0052EUD
$10^{+0.40}_{-0.00}$	MFMCD0102EUD
$20^{+0.60}_{-0.00}$	MFMCD0202EUD

Part No.	MFMCE0**2EUD	Applicable model	MHMF 2.0 kW (One-touch lock type)

[Unit: mm]

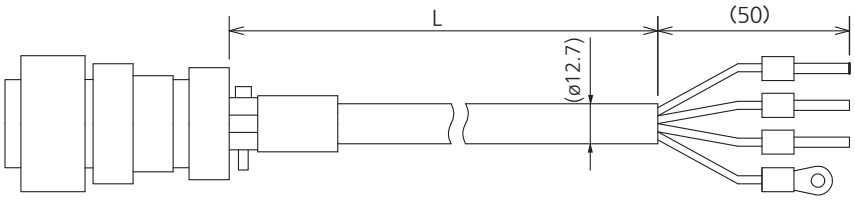

Title	Part No.	Manufacturer
Connector	JL10-6A22-22SE-EB	Japan Aviation Electronics Ind.
Connector pin	JL04-2022CK(14)-R	
Rod terminal	NTUB-2	J.S.T Mfg. Co., Ltd.
Nylon insulated round terminal	N2-M4	J.S.T Mfg. Co., Ltd.
Cable	ROBO-TOP 600 V 2.0 mm² 4-wire	Dyden Corporation

L (m)	Part No.
$3^{+0.26}_{-0.00}$	MFMCE0032EUD
$5^{+0.30}_{-0.00}$	MFMCE0052EUD
$10^{+0.40}_{-0.00}$	MFMCE0102EUD
$20^{+0.60}_{-0.00}$	MFMCE0202EUD

Caution Option cable does not conform to IP65 and IP67.

Related page
- P.2-56 "Specifications of Motor connector"

Part No.	MFMCD0**2ECD	Applicable model	MSMF 1.0 kW(□100) to 2.0 kW, MDMF 1.0 kW to 2.0 kW MHMF 1.0 kW(□130) to 1.5 kW, MGMF 0.85 kW to 1.8 kW (Screwed type)

[Unit: mm]

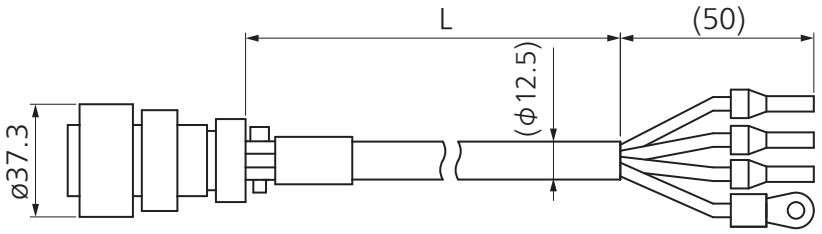

Title	Part No.	Manufacturer
Connector	JL04V-6A20-4SE-EB-R	Tyco Electronics
Connector pin	JL04-2022CK(14)-R	
Rod terminal	NTUB-2	J.S.T Mfg. Co., Ltd.
Nylon insulated round terminal	N2-M4	J.S.T Mfg. Co., Ltd.
Cable	ROBO-TOP 600 V 2.0 mm² 4-wire	Dyden Corporation

L (m)	Part No.
$3^{+0.26}_{-0.00}$	MFMCD0032ECD
$5^{+0.30}_{-0.00}$	MFMCD0052ECD
$10^{+0.40}_{-0.00}$	MFMCD0102ECD
$20^{+0.60}_{-0.00}$	MFMCD0202ECD

Part No.	MFMCE0**2ECD	Applicable model	MHMF 2.0 kW (Screwed type)

[Unit: mm]

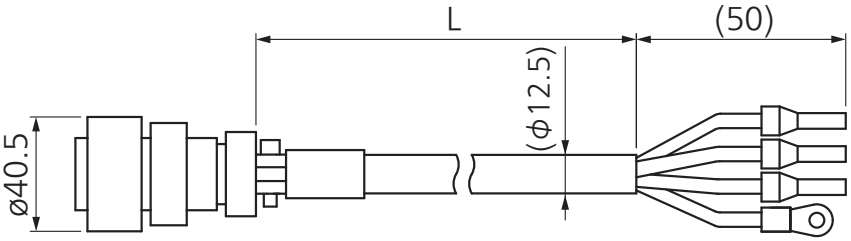

Title	Part No.	Manufacturer
Connector	JL04V-6A22-22SE-EB-R	Japan Aviation Electronics Ind.
Connector pin	JL04-2022CK(14)-R	
Rod terminal	NTUB-2	J.S.T Mfg. Co., Ltd.
Nylon insulated round terminal	N2-M4	J.S.T Mfg. Co., Ltd.
Cable	ROBO-TOP 600 V 2.0 mm² 4-wire	Dyden Corporation

L (m)	Part No.
$3^{+0.26}_{-0.00}$	MFMCE0032ECD
$5^{+0.30}_{-0.00}$	MFMCE0052ECD
$10^{+0.40}_{-0.00}$	MFMCE0102ECD
$20^{+0.60}_{-0.00}$	MFMCE0202ECD

Caution Option cable does not conform to IP65 and IP67.

Related page
• P.2-56 "Specifications of Motor connector"

Part No.	MFMCA0**3EUT	Applicable model	MSMF 3.0 kW to 5.0 kW, MDMF 3.0 kW to 5.0 kW MHMF 3.0 kW to 5.0 kW, MGMF 2.9 kW,4.4 kW (One-touch lock type)

[Unit: mm]

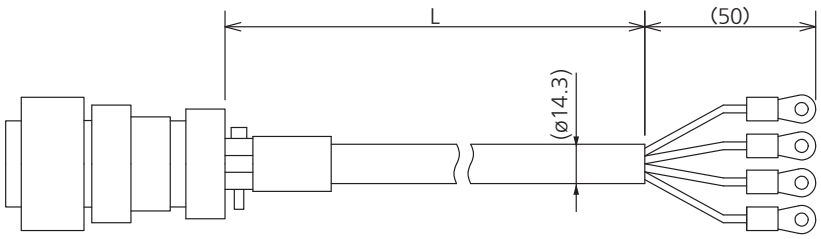

Title	Part No.	Manufacturer
Connector	JL10-6A22-11SE-EB	Japan Aviation Electronics Ind.
Cable clamp	JL04-2022CK(14)-R	
Nylon insulated round terminal	N5.5-5	J.S.T Mfg. Co., Ltd.
Cable	ROBO-TOP 600 V 3.5 mm² 4-wire	Dyden Corporation

L (m)	Part No.
$3^{+0.26}_{-0.00}$	MFMCA0033EUT
$5^{+0.30}_{-0.00}$	MFMCA0053EUT
$10^{+0.40}_{-0.00}$	MFMCA0103EUT
$20^{+0.60}_{-0.00}$	MFMCA0203EUT

Part No.	MFMCA0**3ECT	Applicable model	MSMF 3.0 kW to 5.0 kW, MDMF 3.0 kW to 5.0 kW MHMF 3.0 kW to 5.0 kW, MGMF 2.9 kW,4.4 kW (Screwed type)

[Unit: mm]

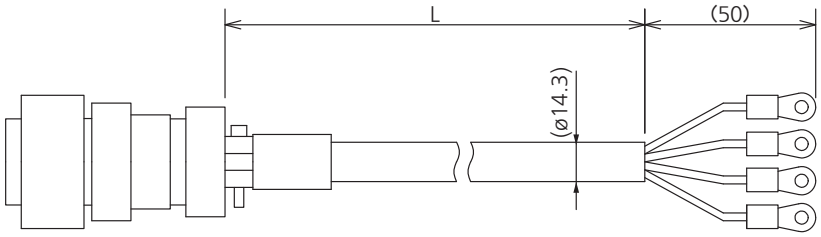

Title	Part No.	Manufacturer
Connector	JL04V-6A22-22SE-EB-R	Japan Aviation Electronics Ind.
Cable clamp	JL04-2022CK(14)-R	
Nylon insulated round terminal	N5.5-5	J.S.T Mfg. Co., Ltd.
Cable	ROBO-TOP 600 V 3.5 mm² 4-wire	Dyden Corporation

L (m)	Part No.
$3^{+0.26}_{-0.00}$	MFMCA0033ECT
$5^{+0.30}_{-0.00}$	MFMCA0053ECT
$10^{+0.40}_{-0.00}$	MFMCA0103ECT
$20^{+0.60}_{-0.00}$	MFMCA0203ECT

Caution Option cable does not conform to IP65 and IP67.

Related page
- P.2-56 "Specifications of Motor connector"

8. Options

Junction Cable for Motor (With brake)

Part No.	MFMCA0 ** 7VFD(Highly/Standard bendable type, Direction of motor shaft) MFMCA0 ** 7VGD(Highly/Standard bendable type, Opposite direction of motor shaft)	Applicable model	MHMF 50 W, 100 W (Connector type)

[Unit: mm]

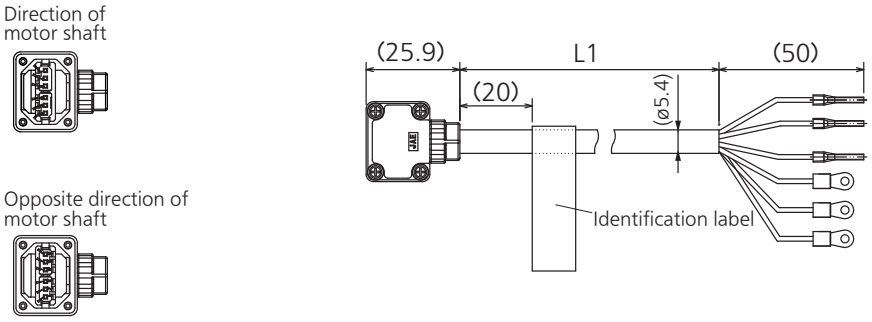

Title	Part No.	Manufacturer
Connector	JN11FH06SN2	Japan Aviation Electronics Ind.
Connector pin	JN11S10K4A1	
Rod terminal	AL0.34-8 TQ	Phoenix Contact
Nylon insulated round terminal	N1.25-M4	J.S.T Mfg. Co., Ltd.
Cable	AWG22 6-wire	Nikko Electronics Wire Co., Ltd.

L (m)	Part No.
$3^{+0.26}_{-0.00}$	MFMCA0037VFD
$5^{+0.30}_{-0.00}$	MFMCA0057VFD
$10^{+0.40}_{-0.00}$	MFMCA0107VFD
$20^{+0.60}_{-0.00}$	MFMCA0207VFD

Part No.	MFMCA0 ** 0VFD(Highly bendable type, Direction of motor shaft) MFMCA0 ** 0VGD(Highly bendable type, Opposite direction of motor shaft) MFMCA0 ** 0XFD(Standard bendable type, Direction of motor shaft) MFMCA0 ** 0XGD(Standard bendable type, Opposite direction of motor shaft)	Applicable model	MQMF 100 W to 400 W MHMF 200 W to 1.0 kW(□80) (Connector type)

[Unit: mm]

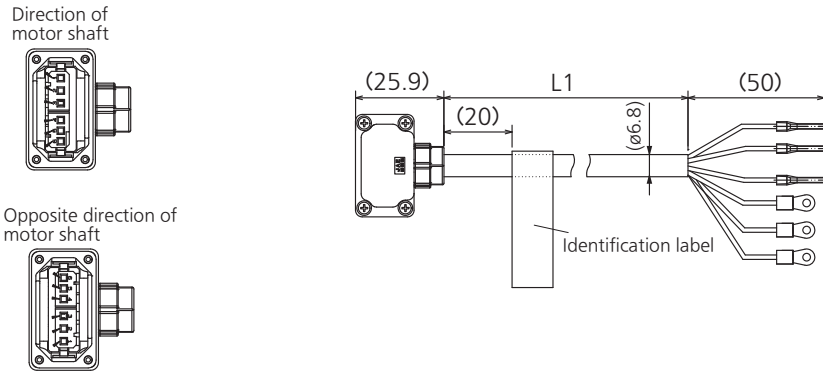

Title	Part No.	Manufacturer
Connector	JN11FH06SN1	Japan Aviation Electronics Ind.
Connector pin	JJN11S35H3A1	
Rod terminal	AI0.75-8GY	Phoenix Contact
Nylon insulated round terminal	N1.25-M4	J.S.T Mfg. Co., Ltd.
Cable	AWG18 6-wire	Nikko Electronics Wire Co., Ltd.

L (m)	Part No.
$3^{+0.26}_{-0.00}$	MFMCA0030VFD
$5^{+0.30}_{-0.00}$	MFMCA0050VFD
$10^{+0.40}_{-0.00}$	MFMCA0100VFD
$20^{+0.60}_{-0.00}$	MFMCA0200VFD

Caution Option cable does not conform to IP65 and IP67.

Related page
- P.2-56 "Specifications of Motor connector"

Part No.	MFMCA0 ** 2FUD	Applicable model	MSMF 1.0 kW(□100) to 2.0 kW, MDMF 1.0 kW to 2.0 kW MHMF 1.0 kW(□130) to 1.5 kW, MGMF 0.85 kW to 1.8 kW (One-touch lock type)

[Unit: mm]

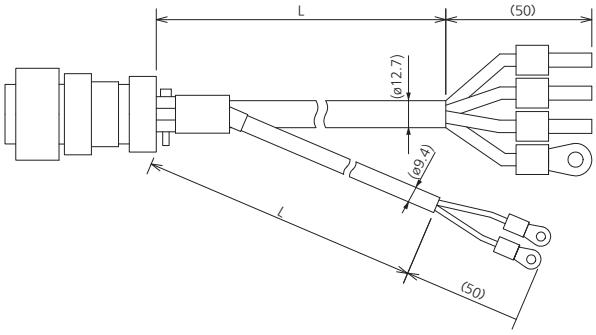

Title		Part No.	Manufacturer
Connector		JL10-6A20-18SE-EB	Japan Aviation Electronics Ind.
Cable clamp		JL042022CK(14)-R	
Rod terminal		NTUB-2	J.S.T Mfg. Co., Ltd.
Nylon insulated round terminal	Earth	N2-M4	J.S.T Mfg. Co., Ltd.
	Brake	N1.25-M4	
Cable		ROBO-TOP 600 V 0.75 mm²2-wire ROBO-TOP 600 V 2.0 mm²4-wire	Dyden Corporation

L (m)	Part No.
$3^{+0.26}_{-0.00}$	MFMCA0032FUD
$5^{+0.30}_{-0.00}$	MFMCA0052FUD
$10^{+0.40}_{-0.00}$	MFMCA0102FUD
$20^{+0.60}_{-0.00}$	MFMCA0202FUD

Part No.	MFMCE0 ** 2FUD	Applicable model	MHMF 2.0 kW (One-touch lock type)

[Unit: mm]

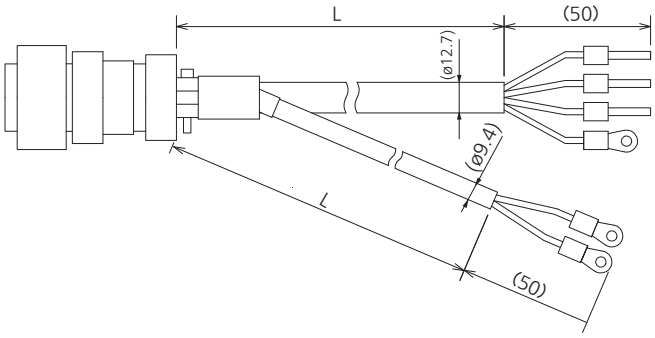

Title		Part No.	Manufacturer
Connector		JL10-6A24-11SE-EB	Japan Aviation Electronics Ind.
Cable clamp		JL04-2428CK(17)-R	
Rod terminal		NTUB-2	J.S.T Mfg. Co., Ltd.
Nylon insulated round terminal	Earth	N2-M4	J.S.T Mfg. Co., Ltd.
	Brake	N1.25-M4	
Cable		ROBO-TOP DP6/2501 0.75 mm²2-wire ROBO-TOP DP6/2501 2.0 mm²4-wire	Dyden Corporation

L (m)	Part No.
$3^{+0.26}_{-0.00}$	MFMCE0032FUD
$5^{+0.30}_{-0.00}$	MFMCE0052FUD
$10^{+0.40}_{-0.00}$	MFMCE0102FUD
$20^{+0.60}_{-0.00}$	MFMCE0202FUD

Caution Option cable does not conform to IP65 and IP67.

Related page
- P.2-56 "Specifications of Motor connector"

Part No.	MFMCA0 ** 2FCD	Applicable model	MSMF 1.0 kW(□100) to 2.0 kW, MDMF 1.0 kW to 2.0 kW MHMF 1.0 kW(□130) to 1.5 kW, MGMF 0.85 kW to 1.8 kW (Screwed type)

[Unit: mm]

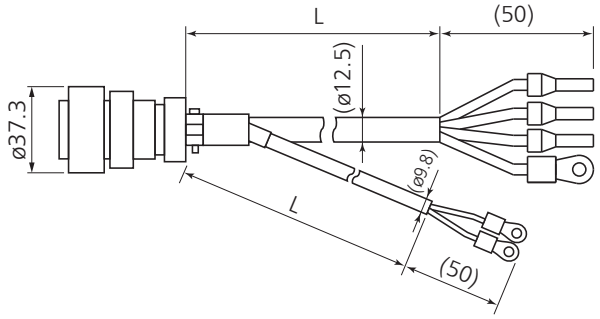

Title		Part No.	Manufacturer
Connector		JL04V-6A20-18SE-EB-RK	Japan Aviation Electronics Ind.
Cable clamp		JL042022CK(14)-R	
Rod terminal		NTUB-2	J.S.T Mfg. Co., Ltd.
Nylon insulated round terminal	Earth	N2-M4	J.S.T Mfg. Co., Ltd.
	Brake	N1.25-M4	
Cable		ROBO-TOP 600 V 0.75 mm²2-wire ROBO-TOP 600 V 2.0 mm²4-wire	Dyden Corporation

L (m)	Part No.
$3^{+0.26}_{-0.00}$	MFMCA0032FCD
$5^{+0.30}_{-0.00}$	MFMCA0052FCD
$10^{+0.40}_{-0.00}$	MFMCA0102FCD
$20^{+0.60}_{-0.00}$	MFMCA0202FCD

Part No.	MFMCE0 ** 2FCD	Applicable model	MHMF 2.0 kW (Screwed type)

[Unit: mm]

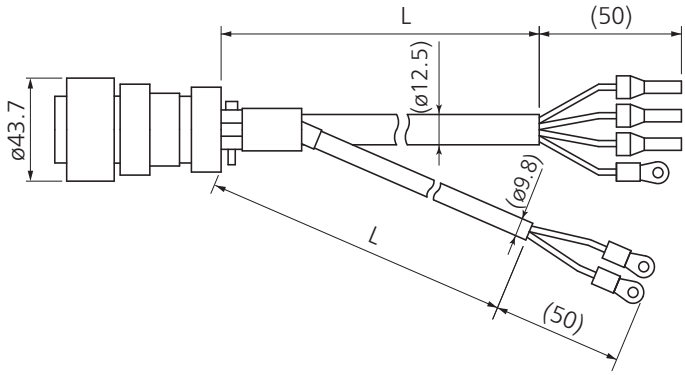

Title		Part No.	Manufacturer
Connector		JL04V-6A24-11SE-EB-R	Japan Aviation Electronics Ind.
Cable clamp		JL04-2428CK(17)-R	
Rod terminal		NTUB-2	J.S.T Mfg. Co., Ltd.
Nylon insulated round terminal	Earth	N2-M4	J.S.T Mfg. Co., Ltd.
	Brake	N1.25-M4	
Cable		ROBO-TOP 600 V 0.75 mm²2-wire ROBO-TOP 600 V 2.0 mm²4-wire	Dyden Corporation

L (m)	Part No.
$3^{+0.26}_{-0.00}$	MFMCE0032FCD
$5^{+0.30}_{-0.00}$	MFMCE0052FCD
$10^{+0.40}_{-0.00}$	MFMCE0102FCD
$20^{+0.60}_{-0.00}$	MFMCE0202FCD

Caution Option cable does not conform to IP65 and IP67.

Related page
• P.2-56 "Specifications of Motor connector"

Part No.	MFMCA0 ** 3FUT	Applicable model	MSMF 3.0 kW to 5.0 kW, MDMF 3.0 kW to 5.0 kW MHMF 3.0 kW to 5.0 kW, MGMF 2.9kW,4.4 kW (One-touch lock type)

[Unit: mm]

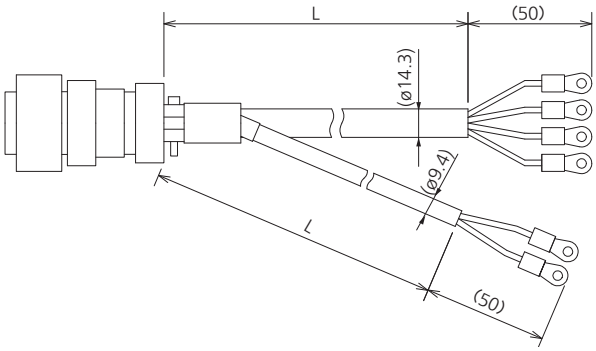

Title		Part No.	Manufacturer
Connector		JL10-6A24-11SE-EB	Japan Aviation Electronics Ind.
Cable clamp		JL04-2428CK(17)-R	
Nylon insulated round terminal	Earth	N5.5-5	J.S.T Mfg. Co., Ltd.
	Brake	N1.25-M4	
Cable		ROBO-TOP DP6/2501 0.75 mm²2-wire ROBO-TOP DP6/25013.5 mm²4-wire	Dyden Corporation

L (m)	Part No.
$3^{+0.26}_{-0.00}$	MFMCA0033FUT
$5^{+0.30}_{-0.00}$	MFMCA0053FUT
$10^{+0.40}_{-0.00}$	MFMCA0103FUT
$20^{+0.60}_{-0.00}$	MFMCA0203FUT

Part No.	MFMCA0 ** 3FCT	Applicable model	MSMF 3.0 kW to 5.0 kW, MDMF 3.0 kW to 5.0 kW MHMF 3.0 kW to 5.0 kW, MGMF 2.9kW,4.4 kW (Screwed type)

[Unit: mm]

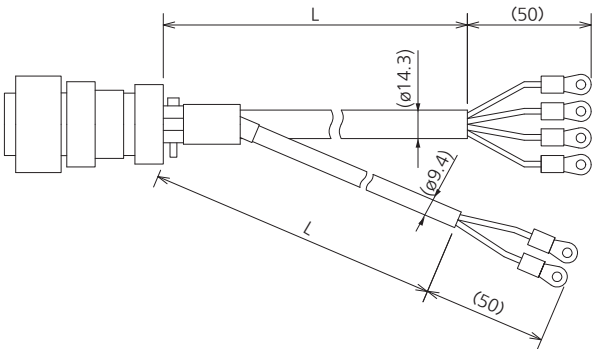

Title		Part No.	Manufacturer
Connector		JL04V-6A24-11SE-EB-R	Japan Aviation Electronics Ind.
Cable clamp		JL04-2428CK(17)-R	
Nylon insulated round terminal	Earth	N5.5-5	J.S.T Mfg. Co., Ltd.
	Brake	N1.25-M4	
Cable		ROBO-TOP DP6/2501 0.75 mm²2-wire ROBO-TOP DP6/25013.5 mm²4-wire	Dyden Corporation

L (m)	Part No.
$3^{+0.26}_{-0.00}$	MFMCA0033FCT
$5^{+0.30}_{-0.00}$	MFMCA0053FCT
$10^{+0.40}_{-0.00}$	MFMCA0103FCT
$20^{+0.60}_{-0.00}$	MFMCA0203FCT

Caution Option cable does not conform to IP65 and IP67.

Related page
- P.2-56 "Specifications of Motor connector"

8. Options

Junction Cable for Brake

Part No.	MFMCB0** 0GET	Applicable model	MSMF 50 W to 1.0 kW(□80) MQMF 100 W to 400 W MHMF 50 W to 1.0 kW(□80) (Leadwire type)

[Unit: mm]

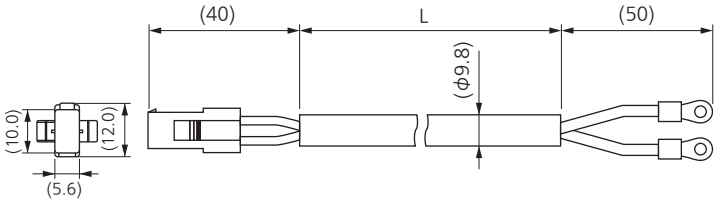

Title	Part No.	Manufacturer
Connector	172157-1	Tyco Electronics
Connector pin	170366-1, 170362-1	
Nylon insulated round terminal	N1.25-M4	J.S.T Mfg. Co., Ltd.
Cable	ROBO-TOP 600 V 0.75 mm² × 2-wire	Dyden Corporation

L (m)	Part No.
$3^{+0.26}_{-0.00}$	MFMCB0030GET
$5^{+0.30}_{-0.00}$	MFMCB0050GET
$10^{+0.40}_{-0.00}$	MFMCB0100GET
$20^{+0.60}_{-0.00}$	MFMCB0200GET

Part No.	MFMCB0**0PJT(Highly bendable type, Direction of motor shaft) MFMCB0**0PKT(Highly bendable type, Opposite direction of motor shaft) MFMCB0**0SJT(Standard bendable type, Direction of motor shaft) MFMCB0**0SKT(Standard bendable type, Opposite direction of motor shaft)	Applicable model	MSMF 50 W to 1.0 kW(□80) (Connector type)

[Unit: mm]

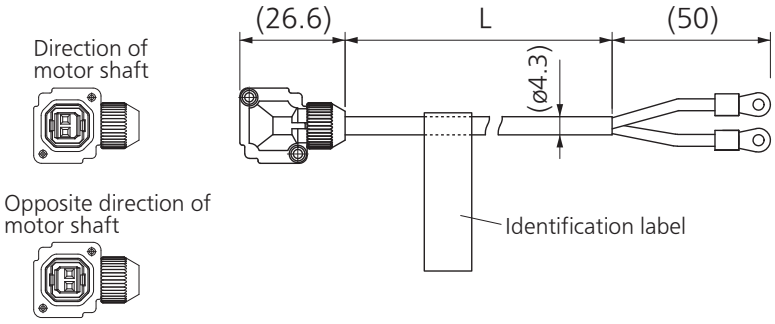

Title	Part No.	Manufacturer
Connector	JN4FT02SJMR	Japan Aviation Electronics Ind.
Connector pin	ST-TMH-S-C1B-100-(A534G) (Sold separately)	
Nylon insulated round terminal	N1.25-M4	J.S.T Mfg. Co., Ltd.
Cable	AWG22 2-wire	Hitachi Cable, Ltd.

L (m)	Part No.
$3^{+0.26}_{-0.00}$	MFMCB0030PJT
$5^{+0.30}_{-0.00}$	MFMCB0050PJT
$10^{+0.40}_{-0.00}$	MFMCB0100PJT
$20^{+0.60}_{-0.00}$	MFMCB0200PJT

Caution Option cable does not conform to IP65 and IP67.

Related page
- P.2-56 "Specifications of Motor connector"

Connector Kit for Interface

Part No.	DV0P4350

- Components

Title	Part No.	Number	Manufacturer	Note
Connector	10150-3000PE equivalent	1	Sumitomo 3M *1	For Connector X4 (50-pins)
Connector cover	10350-52A0-008 equivalent	1		

*1 Old model number: Connector 54306-5019, Connector cover 54331-0501 (Japan Molex Inc.)

- Pin disposition (50 pins) (viewed from the soldering side)

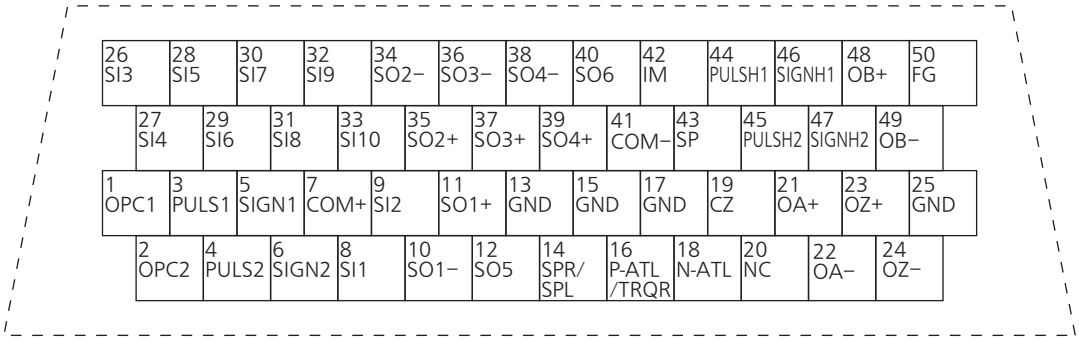

1) Check the stamped pin-No. on the connector body while making a wiring.
2) For the function of each signal title or its symbol, refer to the wiring example of the connector X4.
3) Do not connect anything to NC pins in the above table.

Interface Cable

Part No.	DV0P4360

[Unit: mm]

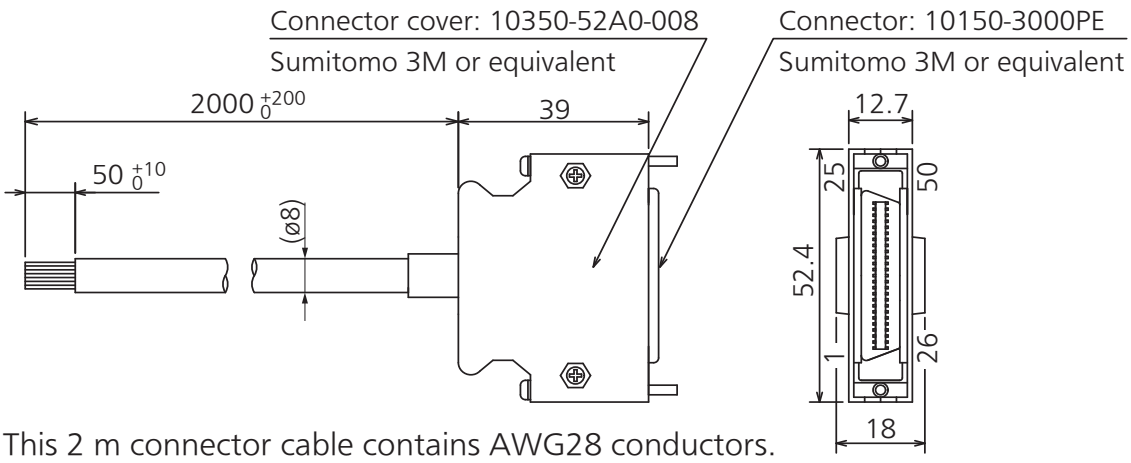

This 2 m connector cable contains AWG28 conductors.

- Table for wiring

Pin No.	color	Pin No.	color	Pin No.	color	Pin No.	color	Pin No.	color
1	Orange (Red1)	11	Orange (Black2)	21	Orange (Red3)	31	Orange (Red4)	41	Orange (Red5)
2	Orange (Black1)	12	Yellow (Black1)	22	Orange (Black3)	32	Orange (Black4)	42	Orange (Black5)
3	Gray (Red1)	13	Gray (Red2)	23	Gray (Red3)	33	Gray (Red4)	43	Gray (Red5)
4	Gray (Black1)	14	Gray (Black2)	24	Gray (Black3)	34	White (Red4)	44	White (Red5)
5	White (Red1)	15	White (Red2)	25	White (Red3)	35	White (Black4)	45	White (Black5)
6	White (Black1)	16	Yellow (Red2)	26	White (Black3)	36	Yellow (Red4)	46	Yellow (Red5)
7	Yellow (Red1)	17	Yel (Blk2)/Pink (Blk2)	27	Yellow (Red3)	37	Yellow (Black4)	47	Yellow (Black5)
8	Pink (Red1)	18	Pink (Red2)	28	Yellow (Black3)	38	Pink (Red4)	48	Pink (Red5)
9	Pink (Black1)	19	White (Black2)	29	Pink (Red3)	39	Pink (Black4)	49	Pink (Black5)
10	Orange (Red2)	20	–	30	Pink (Black3)	40	Gray (Black4)	50	Gray (Black5)

<Notice>
As for how to read the core wire color, in the case of pin No. 1, the color of the lead wire is orange ... (red 1) ... and one red dot mark is shown.
Cable pin No. 50 is not connected to the connector shell (housing) or shielded wire (net wire). Pin No. 50 of the amplifier is connected to the shell (housing) of the connector. The shielded wire (net wire) of the cable is connected to the shell (housing) of the connector of the cable, and by connecting the connector of the optional cable to the amplifier.
Pin No. 50 of the cable and the shielded wire (net wire) of the cable are connected via an amplifier.

Connector Kit for Communication Cable (for RS485, RS232)

Part No.	DV0PM20102

- Components

Title	Part No.	Manufacturer	Note
Connector	CIF-PCNS08KK-072R	J.S.T Mfg. Co., Ltd.	For Connector X2 (8-pins)

- Pin disposition of connector, connector X2

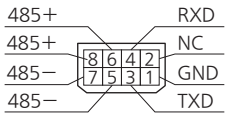

Shell: FG
(Viewed from cable)
<Remarks>
Do not connect anything to NC pins.

- Dimensions [Unit: mm]

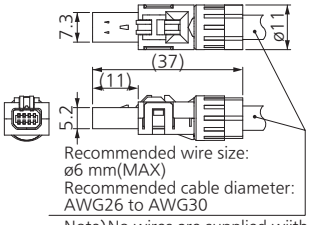

Recommended wire size: ø6 mm(MAX)
Recommended cable diameter: AWG26 to AWG30
Note) No wires are supplied wiith the connector kit.

Connector Kit for Safety

Part No.	DV0PM20103

- Components

Title	Part No.	Manufacturer	Note
Connector	CIF-PCNS08KK-071R	J.S.T Mfg. Co., Ltd.	For Connector X3 (8-pins)

- Pin disposition of connector, connector X3

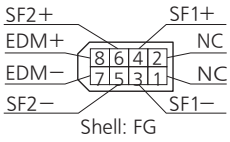

Shell: FG
(Viewed from cable)
<Remarks>
Do not connect anything to NC pins.

- Dimensions [Unit: mm]

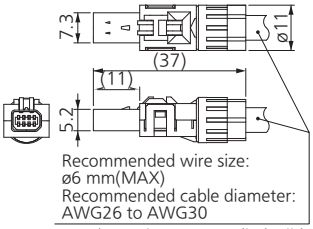

Recommended wire size: ø6 mm(MAX)
Recommended cable diameter: AWG26 to AWG30
Note) No wires are supplied wiith the connector kit.

Remarks

- Connector X1: use with commercially available cable.
  - Configuration of connector X1: USB mini-B

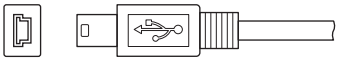

- For crimp tool etc., necessary to produce a cable, access the web site of the manufacturer or consult with the manufacturer for details. For inquiries of manufacturer, refer to P.7-201 "List of Peripheral Equipments".

Safety bypass plug

Part No.	DV0PM20094

- Components

Title	Part No.	Manufacturer	Note
Connector	CIF-PB08AK-GF1R	J.S.T Mfg. Co., Ltd.	For Connector X3

- Internal wiring
(Wiring of the following has been applied inside the plug.)

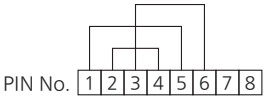

- Dimensions (Resin color : black) [Unit: mm]

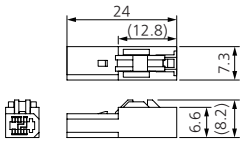

Connector Kit for External Scale

Part No.	DV0PM20026

- Components

Title	Part No.	Manufacturer	Note
Connector	MUF-PK10K-X	J.S.T Mfg. Co., Ltd.	For Connector X5

- Pin disposition of connector, connector X5

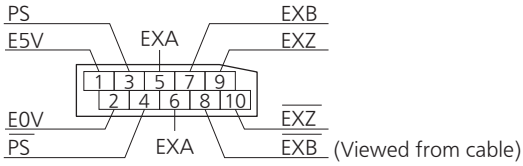

- Dimensions [Unit: mm]

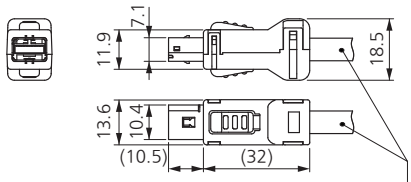

Recommended wire size : Φ6.8 mm(MAX)
Recommended cable diameter : AWG24~AWG28
Note)No wires are supplied.

Connector Kit for Encoder

Part No.	DV0PM20010

- Components

Title	Part No.	Manufacturer	Note
Connector	3E206-0100 KV	Sumitomo 3M *1	For Connector X6
Shell kit	3E306-3200-008		

*1 Old model number: 55100-0670 (Japan Molex Inc.)

- Pin disposition of connector, connector X6

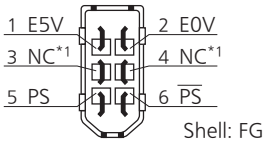

(Viewed from cable)

*1 Do not connect anything to NC pins.

- Dimensions [Unit: mm]

<Shell kit>

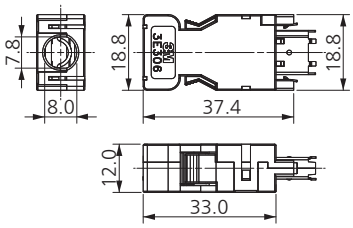

<Connector>

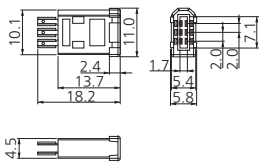

Remarks

- For crimp tool etc., necessary to produce a cable, access the web site of the manufacturer or consult with the manufacturer for details. For inquiries of manufacturer, refer to P.7-201 "List of Peripheral Equipments".

Connector Kit for Power Supply Input

Part No.	DV0PM20032 (For A to D-frame: Single row type)

- Components

Title	Part No.	Number	Manufacturer	Note
Connector	05JFAT-SAXGF	1	J.S.T Mfg. Co., Ltd.	For Connector XA
Handle lever	J-FAT-OT	2		

Part No.	DV0PM20033 (For A to D-frame: Double row type)

- Components

Title	Part No.	Number	Manufacturer	Note
Connector	05JFAT-SAXGSA-C	1	J.S.T Mfg. Co., Ltd.	For Connector XA
Handle lever	J-FAT-OT	2		

- Dimensions

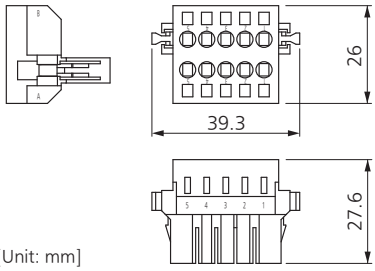

[Unit: mm]

* When connection multiple axes in series, make sure the sum of the current value does not exceed the rated current (11.25 A) of DV0PM20033.

Remarks

When using drivers MDDL∗55∗∗ in single-phase power supply, do not use DV0PM20033.

Driver part No.	Power supply	Rated input current
MADL*01**	Single phase 100 V	1.7 A
MADL*11**	Single phase 100 V	2.0 A
MADL*05**	Single phase/3-phase 200 V	1.6 A/0.9 A
MADL*15**	Single phase/3-phase 200 V	2.0 A/1.1 A
MBDL*21**	Single phase 100 V	4.5 A
MBDL*25**	Single phase/3-phase 200 V	3.7 A/2.1 A
MCDL*31**	Single phase 100 V	7.0 A
MCDL*35**	Single phase/3-phase 200 V	6.4 A/3.4 A
MDDL*45**	Single phase/3-phase 200 V	7.9 A/4.6 A
MDDL*55**	Single phase/3-phase 200 V	13.6 A/7.2 A

Part No.	DV0PM20044 (For E-frame 200 V)

- Components

Title	Part No.	Number	Manufacturer	Note
Connector	05JFAT-SAXGSA-L	1	J.S.T Mfg. Co., Ltd.	For Connector XA
Handle lever	J-FAT-OT-L	2		

Connector Kit for Regenerative Resistor Connection

Part No.	DV0PM20045 (For E-frame)

- Components

Title	Part No.	Number	Manufacturer	Note
Connector	04JFAT-SAXGSA-L	1	J.S.T Mfg. Co., Ltd.	For Connector XC
Handle lever	J-FAT-OT-L	2		

Part No.	DV0PM24610

- Components

Title	Part No.	Manufacturer	Note
Connector	CIF-PCNS08KK-072R	J.S.T Mfg. Co., Ltd.	For Connector X2（PIN 8）
Cable	Shielded 3-core cable	–	Core wire diameter AWG24

● Pin arrangement of connector X2

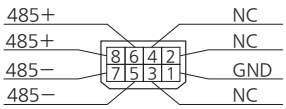

(View from the cable side)

Shell: FG

<Caution>
-Do not connect anything to the pin labeled NC.
-The shielded wire (net wire) of the cable is connected to the shell (housing) of the connector.

● Wiring table

Cable ①

Pin NO.	Signal name	Core wire color
8	485+	Red
7	485−	Yellow
1	GND	White

Cable ②

Pin NO.	Signal name	Core wire color
6	485+	Red
5	485−	Yellow
1	GND	White

● External dimensions

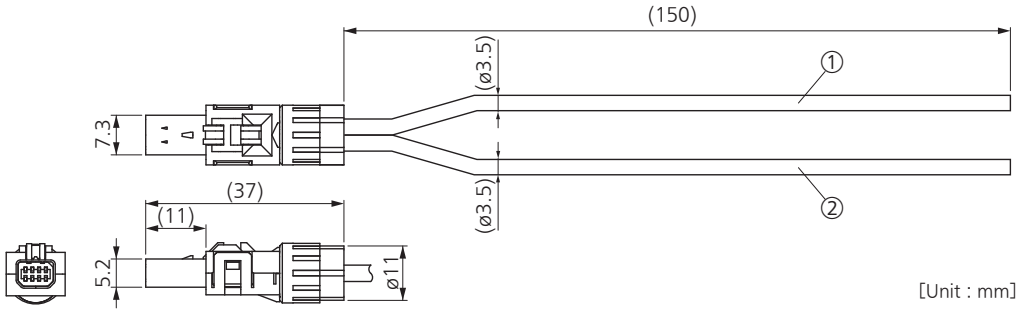

Connector Kit for Motor Connection

Part No.	DV0PM20034 (For A to D-frame)

- Components

Title	Part No.	Number	Manufacturer	Note
Connector	06JFAT-SAXGF	1	J.S.T Mfg. Co., Ltd.	For Connector XB
Handle lever	J-FAT-OT	2		

Part No.	DV0PM20046 (For E-frame)

- Components

Title	Part No.	Number	Manufacturer	Note
Connector	03JFAT-SAXGSA-L	1	J.S.T Mfg. Co., Ltd.	For Connector XB
Handle lever	J-FAT-OT-L	2		

Connector Kit for Motor/Encoder Connection

Part No.	DV0P4290	Applicable model	MSMF 50 W to 1.0 kW(□80) MQMF 100 W to 400 W MHMF 50 W to 1.0 kW(□80)	Without brake

- Components

Title	Part No.	Number	Manufacturer	Note
Connector (Driver side)	3E206-0100 KV	1	Sumitomo 3M (or equivalent)	For Connector X6 (6-pins)
Shell kit	3E306-3200-008	1		
Connector	172161-1	1	Tyco Electronics	For Encoder cable (9-pins)
Connector pin	170365-1	9		
Connector	172159-1	1	Tyco Electronics	For Motor cable (4-pins)
Connector pin	170366-1	4		

- Pin disposition of connector
- Pin disposition of connector
- Pin disposition of connector

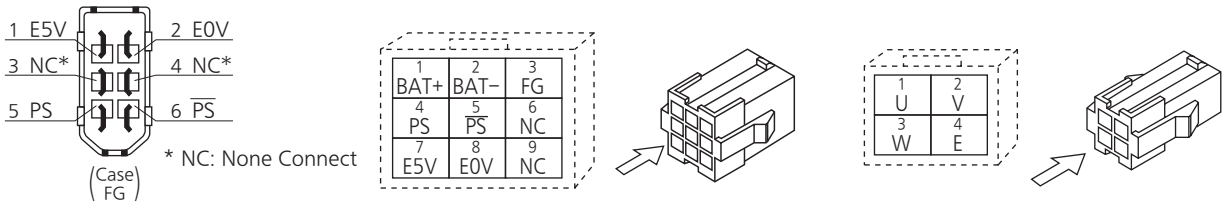

Connector Kit for Motor/Encoder Connection

Part No.	DV0PM20035	Applicable model	MSMF 50 W to1000 W (connector type)	Without brake

- Components

Title	Part No.	Number	Manufacturer	Note
Connector (Driver side)	3E206-0100 KV	1	Sumitomo 3M (or equivalent)*1	For Connector X6 (6-pins)
Shell kit	3E306-3200-008	1		
Encoder connector	N/MS3106B20-29S	1	Japan Aviation Electronics Ind.	For Encoder cable
Cable clamp	N/MS3057-12A	1		

*1 Old model number: Connector 55100-0670 (Japan Molex Inc.)

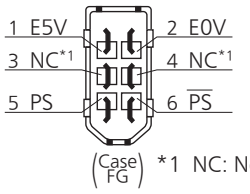

[Direction of motor shaft]

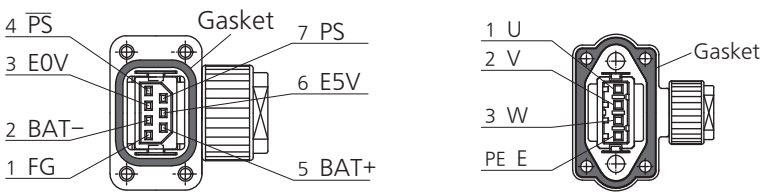

[Opposite direction of motor shaft]

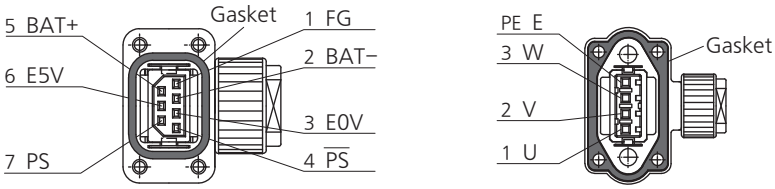

<Remarks>
Secure the gasket in place without removing it from the connector. Otherwise, the degree of protection of IP67 will not be guaranteed.

* Pins 2 and 5 are left unused (NC) when used in incremental system.

Part No.	DV0PM20036	Applicable model	MSMF 1.0 kW(□100) to 2.0 kW MDMF 1.0 kW to 2.0 kW MHMF 1.0 kW(□130),1.5 kW MGMF 0.85 kW to 1.8 kW	Without brake

• Components

Title	Part No.	Number	Manufacturer	Note
Connector (Driver side)	3E206-0100 KV	1	Sumitomo 3M (or equivalent)*1	For Connector X6 (6-pins)
Shell kit	3E306-3200-008	1		
Encoder Connector	JN2DS10SL1-R	1	Japan Aviation Electronics Ind.	For Encoder cable
Connector pin	JN1-22-22S-PKG100	5		
Motor Connector	JL04V-6A-20-4SE-EB-R	1	Japan Aviation Electronics Ind.	For Motor cable
Cable clamp	JL04-2022CK(14)-R	1		

*1 Old model number: Connector 55100-0670 (Japan Molex Inc.)

Part No.	DV0PM20037	Applicable model	MSMF 3.0 kW to 5.0 kW MDMF 3.0 kW to 5.0 kW MHMF 2.0 kW to 5.0 kW MGMF 2.4 kW to 4.4 kW	Without brake

• Components

Title	Part No.	Number	Manufacturer	Note
Connector (Driver side)	3E206-0100 KV	1	Sumitomo 3M (or equivalent)*1	For Connector X6 (6-pins)
Shell kit	3E306-3200-008	1		
Encoder Connector	JN2DS10SL1-R	1	Japan Aviation Electronics Ind.	For Encoder cable
Connector pin	JN1-22-22S-PKG100	5		
Motor Connector	JL04V-6A-20-4SE-EB-R	1	Japan Aviation Electronics Ind.	For Motor cable
Cable clamp	JL04-2022CK(14)-R	1		

*1 Old model number: Connector 55100-0670 (Japan Molex Inc.)

Part No.	DV0PM20038	Applicable model	MSMF 1.0 kW(□100) to 2.0 kW MDMF 1.0 kW to 2.0 kW MHMF 1.0 kW(□130),1.5 kW MGMF 0.85 kW to 1.8 kW	With brake

• Components

Title	Part No.	Number	Manufacturer	Note
Connector (Driver side)	3E206-0100 KV	1	Sumitomo 3M (or equivalent)*1	For Connector X6 (6-pins)
Shell kit	3E306-3200-008	1		
Encoder Connector	JN2DS10SL1-R	1	Japan Aviation Electronics Ind.	For Encoder cable
Connector pin	JN1-22-22S-PKG100	5		
Motor Connector	JL04V-6A-20-4SE-EB-R	1	Japan Aviation Electronics Ind.	For Motor cable
Cable clamp	JL04-2022CK(14)-R	1		

*1 Old model number: Connector 55100-0670 (Japan Molex Inc.)

Part No.	DV0PM20039	Applicable model	MSMF 3.0 kW to 5.0 kW MDMF 3.0 kW to 5.0 kW MHMF 2.0 kW to 5.0 kW MGMF 2.4 kW to 4.4 kW	With brake

• Components

Title	Part No.	Number	Manufacturer	Note
Connector (Driver side)	3E206-0100 KV	1	Sumitomo 3M (or equivalent)*1	For Connector X6 (6-pins)
Shell kit	3E306-3200-008	1		
Encoder Connector	JN2DS10SL1-R	1	Japan Aviation Electronics Ind.	For Encoder cable
Connector pin	JN1-22-22S-PKG100	5		
Motor Connector	JL04V-6A-20-4SE-EB-R	1	Japan Aviation Electronics Ind.	For Motor cable
Cable clamp	JL04-2022CK(14)-R	1		

*1 Old model number: Connector 55100-0670 (Japan Molex Inc.)

Part No.	DV0P4310	Applicable model	MSMF 1.0 kW(□100) to 2.0 kW MDMF 1.0 kW to 2.0 kW MHMF 1.0 kW(□130),1.5 kW MGMF 0.85 kW to 1.8 kW	Without brake

• Components

Title	Part No.	Number	Manufacturer	Note
Connector (Driver side)	3E206-0100 KV	1	Sumitomo 3M (or equivalent)*1	For Connector X6 (6-pins)
Shell kit	3E306-3200-008	1		
Encoder Connector	JN2DS10SL1-R	1	Japan Aviation Electronics Ind.	For Encoder cable
Connector pin	JN1-22-22S-PKG100	5		
Motor Connector	JL04V-6A-20-4SE-EB-R	1	Japan Aviation Electronics Ind.	For Motor cable
Cable clamp	JL04-2022CK(14)-R	1		

*1 Old model number: Connector 55100-0670 (Japan Molex Inc.)

Part No.	DV0P4320	Applicable model	MSMF 3.0 kW to 5.0 kW MDMF 3.0 kW to 5.0 kW MHMF 2.0 kW to 5.0 kW MGMF 2.4 kW to 4.4 kW	Without brake

• Components

Title	Part No.	Number	Manufacturer	Note
Connector (Driver side)	3E206-0100 KV	1	Sumitomo 3M (or equivalent)*1	For Connector X6 (6-pins)
Shell kit	3E306-3200-008	1		
Encoder Connector	N/MS3106B20-29S	1	Japan Aviation Electronics Ind.	For Encoder cable
Connector pin	N/MS3057-12A	1		
Motor Connector	N/MS3106B22-22S	1	Japan Aviation Electronics Ind.	For Motor cable
Cable clamp	N/MS3057-12A	1		

*1 Old model number: Connector 55100-0670 (Japan Molex Inc.)

Part No.	DV0P4330	Applicable model	MSMF 1.0 kW(□100) to 2.0 kW MDMF 1.0 kW to 2.0 kW MHMF 1.0 kW(□130),1.5 kW MGMF 0.85 kW to 1.8 kW	With brake

• Components

Title	Part No.	Number	Manufacturer	Note
Connector (Driver side)	3E206-0100 KV	1	Sumitomo 3M (or equivalent)*1	For Connector X6 (6-pins)
Shell kit	3E306-3200-008	1		
Encoder Connector	N/MS3106B20-29S	1	Japan Aviation Electronics Ind.	For Encoder cable
Connector pin	N/MS3057-12A	1		
Motor Connector	N/MS3106B20-18S	1	Japan Aviation Electronics Ind.	For Motor cable
Cable clamp	N/MS3057-12A	1		

*1 Old model number: Connector 55100-0670 (Japan Molex Inc.)

Part No.	DV0P4340	Applicable model	MSMF 3.0 kW to 5.0 kW MDMF 3.0 kW to 5.0 kW MHMF 2.0 kW to 5.0 kW MGMF 2.4 kW to 4.4 kW	With brake

• Components

Title	Part No.	Number	Manufacturer	Note
Connector (Driver side)	3E206-0100 KV	1	Sumitomo 3M (or equivalent)*1	For Connector X6 (6-pins)
Shell kit	3E306-3200-008	1		
Encoder Connector	N/MS3106B20-29S	1	Japan Aviation Electronics Ind.	For Encoder cable
Connector pin	N/MS3057-12A	1		
Motor Connector	N/MS3106B24-11S	1	Japan Aviation Electronics Ind.	For Motor cable
Cable clamp	N/MS3057-12A	1		

*1 Old model number: Connector 55100-0670 (Japan Molex Inc.)

Chrysanthemum Chain Connection Cable (A6SE, A6NE, A6BE Series is not useable)

Part No.	DV0PM20040

- Components

Title	Part No.	Number	Manufacturer	Note
Connector	JN4FT02SJM-R	1	Japan Aviation Electronics Ind.	For brake cable
Socket contact	ST-TMH-S-C1B-100-(A534G) (Sold separately)	2		

- Pin disposition of connector for brake cable

[Direction of motor shaft]

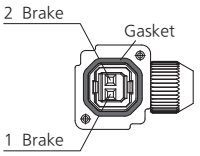

[Opposite direction of motor shaft]

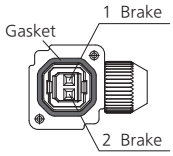

<Remarks>
Secure the gasket in place without removing it from the connector. Otherwise, the degree of protection of IP67 will not be guaranteed.

Part No.	DV0PM24610

- Components

Title	Part No.	Manufacturer	Note
Connector	CIF-PCNS08KK-072R	J.S.T. Mfg. Co., Ltd.	For Connector X2 (8-pins)
Cable	The cable with shield contains 3 conductors	–	Cable diameter AWG24

- Pin disposition of connector, connector X2

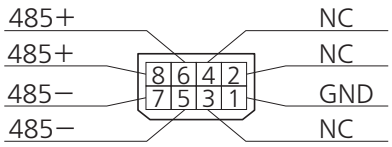

(Viewed from cable)

Shell: FG

<Remarks>
- Do not connect anything to NC pins.
- The shielding wire (cable) is connected to the outer shell (basket) of the connector.

- Table for wiring

Cable ①

Pin No.	Title of signal	Color
8	485+	Red
7	485−	Yellow
1	GND	White

Cable ②

Pin No.	Title of signal	Color
6	485+	Red
5	485−	Yellow
1	GND	White

- Dimensions

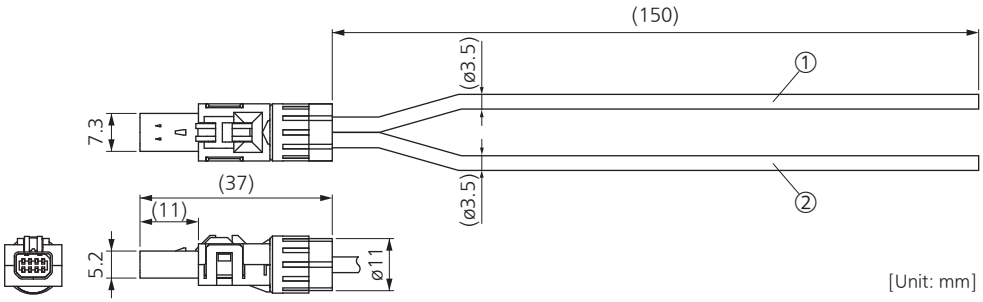

[Unit: mm]

Connector Kit for Motor/Brake Connection

Part No.	DV0PM24581	Applicable model	MHMF 50 W , 100 W (Connector type)	With/ Without brake

• Components

Title	Part No.	Number	Manufacturer	Note
Connector (Driver side)	3E06-0100KV	1	Sumitomo 3M (or equivalent)	For Connector X6 (6-pins)
Shell kit	3E306-3200-008	1		
Connector	JN6FR07SM1	1	Japan Aviation Electronics Ind.	For Encoder cable (7-pins)
Connector pin	LY10-C1-A1-10000	7		
Connector	JN11FH06SN2	1	Japan Aviation Electronics Ind.	For Motor cable (6-pins)
Connector pin	JN11S10K4A1	6		

Part No.	DV0PM24582	Applicable model	MQMF 100W to 400W , MHMF 200 W to 1.0 kW (□80) (Connector type)	With brake

• Components

Title	Part No.	Number	Manufacturer	Note
Connector (Driver side)	3E06-0100KV	1	Sumitomo 3M (or equivalent)	For Connector X6 (6-pins)
Shell kit	3E306-3200-008	1		
Connector	JN6FR07SM1	1	Japan Aviation Electronics Ind.	For Encoder cable (7-pins)
Connector pin	LY10-C1-A1-10000	7		
Connector	JN11FH06SN1	1	Japan Aviation Electronics Ind.	For Motor cable (6-pins)
Connector pin	JN11S35H3A1	6		

Part No.	DV0PM24583	Applicable model	MSMF 1.0 kW (□100) to 2.0 kW MDMF 1.0 kW to 2.0 kW MHMF 1.0 kW (□130) to 1.5 kW MGMF 0.85kW to 1.8kW (For Encoder connector :JN2 One-touch lock type)	Without brake

• Components

Title	Part No.	Number	Manufacturer	Note
Connector (Driver side)	3E06-0100KV	1	Sumitomo 3M (or equivalent)	For Connector X6 (6-pins)
Shell kit	3E306-3200-008	1		
Connector	JN2DS10SL1-R	1	Japan Aviation Electronics Ind.	For Encoder cable
Connector pin	JN1-22-22S-PKG100	5		
Connector	JL10-6A20-4SE-EB	1	Japan Aviation Electronics Ind.	For Motor cable
Connector pin	JL04-2022-CK(14)-R	1		

Part No.	DV0PM24584	Applicable model	MSMF 3.0 kW to 5.0 kW MDMF 3.0 kW to 5.0 kW MHMF 2.0 kW to 5.0 kW MGMF 2.4 kW to 4.4 kW (For Encoder connector :JN2 One-touch lock type)	Without brake

• Components

Title	Part No.	Number	Manufacturer	Note
Connector (Driver side)	3E06-0100KV	1	Sumitomo 3M (or equivalent)	For Connector X6 (6-pins)
Shell kit	3E306-3200-008	1		
Connector	JN2DS10SL1-R	1	Japan Aviation Electronics Ind.	For Encoder cable
Connector pin	JN1-22-22S-PKG100	5		
Connector	JL10-6A22-22SE-EB	1	Japan Aviation Electronics Ind.	For Motor cable
Connector pin	JL04-2022-CK(14)-R	1		

Connector Kit for Motor/Encoder Connection

Part No.	DV0PM24585	Applicable model	MSMF 1.0 kW (□100) to 2.0 kW MDMF 1.0 kW to 2.0 kW MHMF 1.0 kW (□130) to 1.5 kW MGMF 0.85kW to 1.8kW (For Encoder connector :JN2 One-touch lock type)	With brake

- Components

Title	Part No.	Number	Manufacturer	Note
Connector (Driver side)	3E06-0100KV	1	Sumitomo 3M (or equivalent)	For Connector X6 (6-pins)
Shell kit	3E306-3200-008	1		
Connector	JN2DS10SL1-R	1	Japan Aviation Electronics Ind.	For Encoder cable
Connector pin	JN1-22-22S-PKG100	1		
Connector	JL10-6A20-18SE-EB	5	Japan Aviation Electronics Ind.	For Motor cable
Cable clamp	JL04-2022-CK(14)-R	1		

Part No.	DV0PM24586	Applicable model	MSMF 3.0 kW to 5.0 kW MDMF 3.0 kW to 5.0 kW MHMF 2.0 kW to 5.0 kW MGMF 2.4kW to 4.4kW (For Encoder connector :JN2 One-touch lock type)	With brake

- Components

Title	Part No.	Number	Manufacturer	Note
Connector (Driver side)	3E06-0100KV	1	Sumitomo 3M (or equivalent)	For Connector X6 (6-pins)
Shell kit	3E306-3200-008	1		
Connector	JN2DS10SL1-R	1	Japan Aviation Electronics Ind.	For Encoder cable
Connector pin	JN1-22-22S-PKG100	5		
Connector	JL10-6A24-11SE-EB	1	Japan Aviation Electronics Ind.	For Motor cable
Cable clamp	JL04-2428-CK(17)-R	1		

Part No.	DV0PM24587	Applicable model	MSMF 1.0 kW (□100) to 2.0 kW MDMF 1.0 kW to 2.0 kW MHMF 1.0 kW (□130) to 1.5 kW MGMF 0.85kW to 1.8kW (For Encoder connector :JL10 One-touch lock type)	Without brake

- Components

Title	Part No.	Number	Manufacturer	Note
Connector (Driver side)	3E06-0100KV	1	Sumitomo 3M (or equivalent)	For Connector X6 (6-pins)
Shell kit	3E306-3200-008	1		
Connector	JL10-6A20-29S-EB	1	Japan Aviation Electronics Ind.	For Encoder cable
Connector pin	JL04-2022-CK(09)-R	1		
Connector	JL10-6A20-4SE-EB	1	Japan Aviation Electronics Ind.	For Motor cable
Cable clamp	JL04-2022-CK(14)-R	1		

Connector Kit for Motor/Encoder Connection

Part No.	DV0PM24588	Applicable model	MSMF 3.0 kW to 5.0 kW MDMF 3.0 kW to 5.0 kW MHMF 2.0 kW to 5.0 kW MGMF 2.4 kW to 4.4 kW (For Encoder connector :JL10 One-touch lock type)	Without brake

• Components

Title	Part No.	Number	Manufacturer	Note
Connector (Driver side)	3E06-0100KV	1	Sumitomo 3M (or equivalent)	For Connector X6 (6-pins)
Shell kit	3E306-3200-008	1		
Connector	JL10-6A20-29S-EB	1	Japan Aviation Electronics Ind.	For Encoder cable
Connector pin	JL04-2022-CK(09)-R	1		
Connector	JL10-6A22-22SE-EB	1	Japan Aviation Electronics Ind.	For Motor cable
Cable clamp	JL04-2022-CK(14)-R	1		

Part No.	DV0PM24589	Applicable model	MSMF 1.0 kW (□100) to 2.0 kW MDMF 1.0 kW to 2.0 kW MHMF 1.0 kW (□130) to 1.5 kW MGMF 0.85kW to 1.8kW (For Encoder connector :JL10 One-touch lock type)	With brake

• Components

Title	Part No.	Number	Manufacturer	Note
Connector (Driver side)	3E06-0100KV	1	Sumitomo 3M (or equivalent)	For Connector X6 (6-pins)
Shell kit	3E306-3200-008	1		
Connector	JL10-6A20-29S-EB	1	Japan Aviation Electronics Ind.	For Encoder cable
Connector pin	JL04-2022-CK(09)-R	1		
Connector	JL10-6A20-18SE-EB	1	Japan Aviation Electronics Ind.	For Motor cable
Connector pin	JL04-2022-CK(14)-R	1		

Part No.	DV0PM24590	Applicable model	MSMF 3.0 kW to 5.0 kW MDMF 3.0 kW to 5.0 kW MHMF 2.0 kW to 5.0 kW MGMF 2.4 kW to 4.4 kW (For Encoder connector :JL10 One-touch lock type)	With brake

• Components

Title	Part No.	Number	Manufacturer	Note
Connector (Driver side)	3E06-0100KV	1	Sumitomo 3M (or equivalent)	For Connector X6 (6-pins)
Shell kit	3E306-3200-008	1		
Connector	JL10-6A20-29S-EB	1	Japan Aviation Electronics Ind.	For Encoder cable
Connector pin	JL04-2022-CK(09)-R	1		
Connector	JL10-6A24-11SE-EB	1	Japan Aviation Electronics Ind.	For Motor cable
Connector pin	JL04-2428-CK(17)-R	1		

Connector Kit for Motor/Encoder Connection

Part No.	DV0PM20107	Applicable model	MDMF 7.5 kW to 15 kW MHMF 7.5 kW MGMF 5.5 kW (For Encoder connector :JL10 One-touch lock type)	Without brake

- Components

Title	Part No.	Number	Manufacturer	Note
Connector (Driver side)	3E206-0100KV	1	Sumitomo 3M (or equivalent)	For Connector X6 (6-pins)
Shell kit	3E306-3200-008	1		
Encoder Connector	JL10-6A20-29S-EB	1	Japan Aviation Electronics Ind.	For Encoder cable
Cable clamp	JL04-2022-CK(09)-R	1		
Motor Connector	JL04V-6A32-17SE-EB-RK	1	Japan Aviation Electronics Ind.	For Motor cable
Cable clamp	JL04-32CK(24)-RK	1		

Part No.	DV0PM20108	Applicable model	MDMF 7.5 kW to 15 kW MHMF 7.5 kW MGMF 5.5 kW (For Encoder connector :JL10 One-touch lock type)	With brake

- Components

Title	Part No.	Number	Manufacturer	Note
Connector (Driver side)	3E206-0100KV	1	Sumitomo 3M (or equivalent)	For Connector X6 (6-pins)
Shell kit	3E306-3200-008	1		
Encoder Connector	JL10-6A20-29S-EB	1	Japan Aviation Electronics Ind.	For Encoder cable
Cable clamp	JL04-2022-CK(09)-R	1		
Motor Connector	JL04V-6A32-17SE-EB-RK	1	Japan Aviation Electronics Ind.	For Motor cable
Cable clamp	JL04-32CK(24)-RK	1		
Brake connector	N/MS3106B14S-2S	1	Japan Aviation Electronics Ind.	For Brake cable
Cable clamp	N/MS3057-6A	1		

Part No.	DV0PM20109	Applicable model	MDMF 22.0 kW (For Encoder connector :JL10 One-touch lock type)	Without brake

- Components

Title	Part No.	Number	Manufacturer	Note
Connector (Driver side)	3E206-0100KV	1	Sumitomo 3M (or equivalent)	For Connector X6 (6-pins)
Shell kit	3E306-3200-008	1		
Encoder Connector	JL10-6A20-29S-EB	1	Japan Aviation Electronics Ind.	For Encoder cable
Cable clamp	JL04-2022-CK(09)-R	1		

Connector Kit for Motor/Encoder Connection

Part No.	DV0PM20110	Applicable model	MDMF 22.0 kW (For Encoder connector :JL10 One-touch lock type)	With brake

• Components

Title	Part No.	Number	Manufacturer	Note
Connector (Driver side)	3E206-0100KV	1	Sumitomo 3M (or equivalent)	For Connector X6 (6-pins)
Shell kit	3E306-3200-008	1		
Encoder Connector	JL10-6A20-29S-EB	1	Japan Aviation Electronics Ind.	For Encoder cable
Cable clamp	JL04-2022-CK(09)-R	1		
Brake connector	N/MS3106B14S-2S	1	Japan Aviation Electronics Ind.	For Brake cable
Cable clamp	N/MS3057-6A	1		

Part No.	DV0PM20111	Applicable model	MDMF 7.5 kW to 15 kW MHMF 7.5 kW MGMF 5.5 kW (For Encoder connector :JL10 lock type)	Without brake

• Components

Title	Part No.	Number	Manufacturer	Note
Connector (Driver side)	3E206-0100KV	1	Sumitomo 3M (or equivalent)	For Connector X6 (6-pins)
Shell kit	3E306-3200-008	1		
Encoder Connector	N/M3106B20-29S	1	Japan Aviation Electronics Ind.	For Encoder cable
Cable clamp	N/M3057-12A	1		
Motor Connector	JL04V-6A32-17SE-EB-RK	1	Japan Aviation Electronics Ind.	For Motor cable
Cable clamp	JL04-32CK(24)-RK	1		

Part No.	DV0PM20112	Applicable model	MDMF 7.5 kW to 15 kW MHMF 7.5 kW MGMF 5.5 kW (For Encoder connector :JL10 lock type)	With brake

• Components

Title	Part No.	Number	Manufacturer	Note
Connector (Driver side)	3E206-0100KV	1	Sumitomo 3M (or equivalent)	For Connector X6 (6-pins)
Shell kit	3E306-3200-008	1		
Encoder Connector	N/M3106B20-29S	1	Japan Aviation Electronics Ind.	For Encoder cable
Cable clamp	N/M3057-12A	1		
Motor Connector	JL04V-6A32-17SE-EB-RK	1	Japan Aviation Electronics Ind.	For Motor cable
Cable clamp	JL04-32CK(24)-RK	1		
Brake connector	N/MS3106B14S-2S	1	Japan Aviation Electronics Ind.	For Brake cable
Cable clamp	N/MS3057-6A	1		

Connector Kit for Motor/Encoder Connection

Part No.	DV0PM20113	Applicable model	MDMF 22.0 kW (For Encoder connector :JL10 lock type)	Without brake

- Components

Title	Part No.	Number	Manufacturer	Note
Connector (Driver side)	3E206-0100KV	1	Sumitomo 3M (or equivalent)	For Connector X6 (6-pins)
Shell kit	3E306-3200-008	1		
Encoder Connector	N/MS3106B20-29S	1	Japan Aviation Electronics Ind.	For Encoder cable
Connector pin	N/MS3057-12A	1		

Part No.	DV0PM20114	Applicable model	MDMF 22.0 kW (For Encoder connector :JL10 lock type)	With brake

- Components

Title	Part No.	Number	Manufacturer	Note
Connector (Driver side)	3E206-0100KV	1	Sumitomo 3M (or equivalent)	For Connector X6 (6-pins)
Shell kit	3E306-3200-008	1		
Encoder Connector	N/MS3106B20-29S	1	Japan Aviation Electronics Ind.	For Encoder cable
Cable clamp	N/MS3057-12A	1		
Brake connector	N/MS3106B14S-2S	1	Japan Aviation Electronics Ind.	For Brake cable
Cable clamp	N/MS3057-6A	1		

Part No.	DV0PM20056	Applicable model	MDMF 7.5 kW to 15 kW MHMF 7.5 kW MGMF 5.5 kW (For Encoder connector :JN2 One-touch lock type)	Without brake

- Components

Title	Part No.	Number	Manufacturer	Note
Connector (Driver side)	3E206-0100KV	1	Sumitomo 3M (or equivalent)	For Connector X6 (6-pins)
Shell kit	3E306-3200-008	1		
Encoder Connector	JN2DS10SL1-R	1	Japan Aviation Electronics Ind.	For Encoder cable
Cable clamp	JN1-22-22S-PKG100	5		
Motor Connector	JL04V-6A32-17SE-EB-RK	1	Japan Aviation Electronics Ind.	For Motor cable
Connector pin	JL04-32CK(24)-RK	1		

Connector Kit for Motor/Encoder Connection

Part No.	DV0PM20057	Applicable model	MDMF 7.5 kW to 15 kW MHMF 7.5 kW MGMF 5.5 kW (For Encoder connector :JN2 One-touch lock type)	With brake

- Components

Title	Part No.	Number	Manufacturer	Note
Connector (Driver side)	3E206-0100KV	1	Sumitomo 3M (or equivalent)	For Connector X6 (6-pins)
Shell kit	3E306-3200-008	1		
Encoder Connector	JN2DS10SL1-R	1	Japan Aviation Electronics Ind.	For Encoder cable
Connector pin	JN1-22-22S-PKG100	5		
Motor Connector	JL04V-6A32-17SE-EB-RK	1	Japan Aviation Electronics Ind.	For Motor cable
Cable clamp	JL04-32CK(24)-RK	1		
Brake connector	N/MS3106B14S-2S	1	Japan Aviation Electronics Ind.	For Brake cable
Cable clamp	N/MS3057-6A	1		

Part No.	DV0PM20115	Applicable model	MDMF 22.0 kW (For Encoder connector :JN2 One-touch lock type)	Without brake

- Components

Title	Part No.	Number	Manufacturer	Note
Connector (Driver side)	3E206-0100KV	1	Sumitomo 3M (or equivalent)	For Connector X6 (6-pins)
Shell kit	3E306-3200-008	1		
Encoder Connector	JN2DS10SL1-R	1	Japan Aviation Electronics Ind.	For Encoder cable
Connector pin	JN1-22-22S-PKG100	5		

Part No.	DV0PM20116	Applicable model	MDMF 22.0 kW (For Encoder connector :JN2 One-touch lock type)	With brake

- Components

Title	Part No.	Number	Manufacturer	Note
Connector (Driver side)	3E206-0100KV	1	Sumitomo 3M (or equivalent)	For Connector X6 (6-pins)
Shell kit	3E306-3200-008	1		
Encoder Connector	JN2DS10SL1-R	1	Japan Aviation Electronics Ind.	For Encoder cable
Connector pin	JN1-22-22S-PKG100	5		
Brake connector	N/MS3106B14S-2S	1	Japan Aviation Electronics Ind.	For Brake cable
Cable clamp	N/MS3057-6A	1		

8. Options

Battery For Absolute Encoder

Battery For Absolute Encoder

Part No.	DV0P2990

- Lithium battery: 3.6 V 2000 mAh

[Unit: mm]

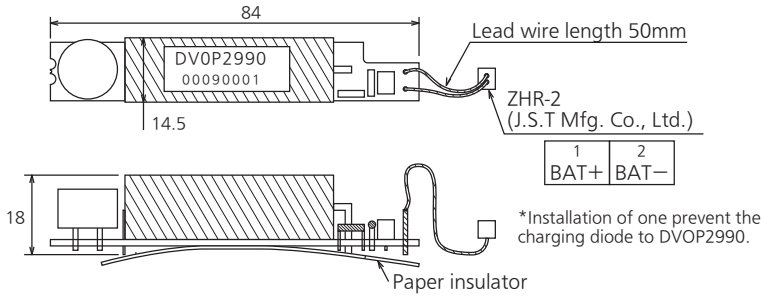

Caution This battery is categorized as hazardous substance, and you may be required to present an application of hazardous substance when you transport by air (both passenger and cargo airlines).

Battery Box For Absolute Encoder

Part No.	DV0P4430

- Components

[Unit: mm]

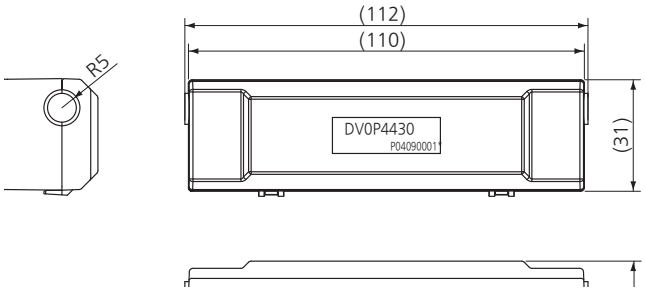

Related page • P.7-12 “Absolute system”

8. Options

Mounting Bracket

Part No.	DV0PM20100	Frame symbol of applicable driver	A-frame B-frame	Mounting screw	Upper and Bottom side sharing 2pcs M4 × L6 Pan head 4pcs

Dimensions — Upper side and Bottom side

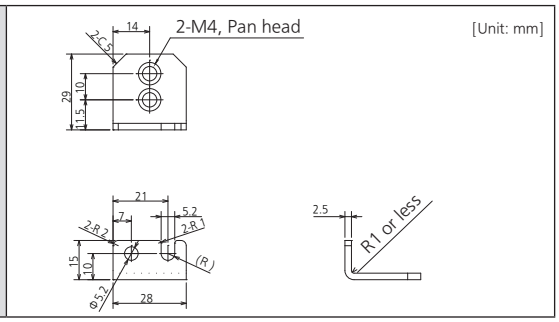

Part No.	DV0PM20101	Frame symbol of applicable driver	C-frame D-frame	Mounting screw	Upper side 1pcs Bottom side 1pcs M4 × L6 Pan head 4pcs

Dimensions — Upper side

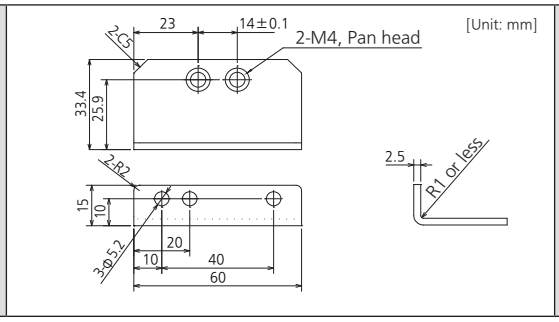

Bottom side

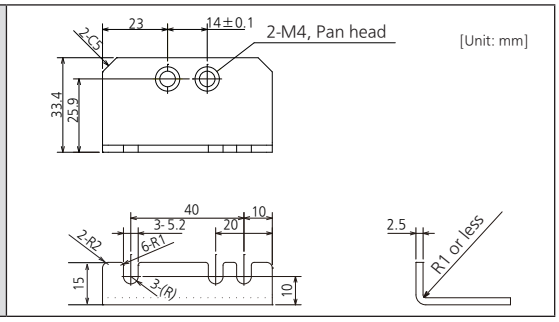

Caution For E, F-frame, you con make a front end and back end mounting by changing the mounting direction of L-shape bracket (attachment).

Related page • P.7-93 “Dimensions of driver”

8. Options

Reactor

Fig.1

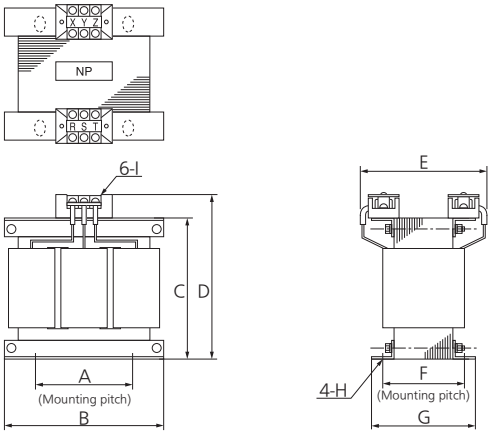

Fig.2

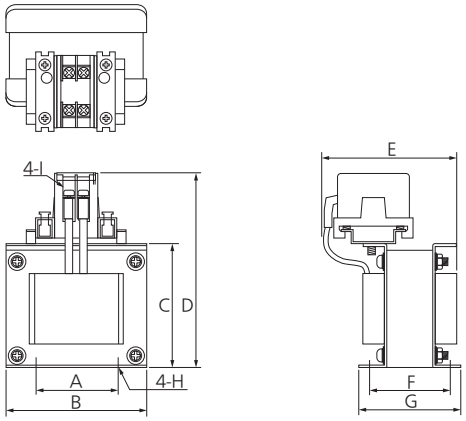

• Wiring of the reactor <3-Phase>

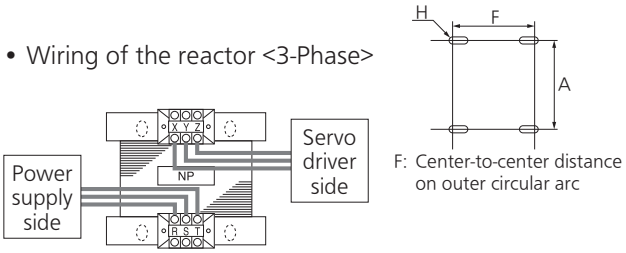

• Wiring of the reactor <Single phase>

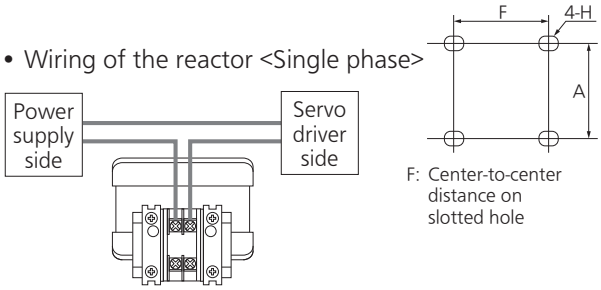

[Unit: mm]

	Part No.	A	B	C	D	E(Max)	F	G	H	I	Inductance (mH)	Rated current (A)
Fig.1	DV0P220	65±1	125±1	(93)	136Max	155	70+3/−0	85±2	4-7ϕ×12	M4	6.81	3
	DV0P221	60±1	150±1	(113)	155Max	130	60+3/−0	75±2	4-7ϕ×12	M4	4.02	5
	DV0P222	60±1	150±1	(113)	155Max	140	70+3/−0	85±2	4-7ϕ×12	M4	2	8
	DV0P223	60±1	150±1	(113)	155Max	150	79+3/−0	95±2	4-7ϕ×12	M4	1.39	11
	DV0P224	60±1	150±1	(113)	160Max	155	84+3/−0	100±2	4-7ϕ×12	M5	0.848	16
	DV0P225	60±1	150±1	(113)	160Max	170	100+3/−0	115±2	4-7ϕ×12	M5	0.557	25
Fig.2	DV0P227	55±0.7	76.5±1	66.5±1	110Max	90	43.6±2	56±2	4-5ϕ×10	M3.5	4.02	5
	DV0P228	55±0.7	76.5±1	66.5±1	110Max	95	48.0±2	61±2	4-5ϕ×10	M3.5	2	8
	DV0PM20047	55±0.7	76.5±1	66.5±1	110Max	105	58.6±2	71±2	4-5ϕ×10	M4	1.39	11

Driver series	Power supply	Rated output	Part No.
MADL*01S*	single phase 100V	50 W	DV0P227
MADL*11S*		100 W	
MBDL*21S*		200 W	DV0P228
MCDL*31S*		400 W	
MADL*05S*	single phase 200V	50 W	DV0P227
MADL*05S*		100 W	
MADL*15S*		200 W	
MBDL*25S*		400 W	DV0P228
MCDL*35S*		750 W	
MDDL*45S*		1.0 kW	
MDDL*55S*		1.0 kW	
MDDL*55S*		1.3 kW	DV0PM20047
MDDL*55S*		1.5 kW	
MADL*05S*	3-phase, 200 V	50 W	DV0P220
MADL*05S*		100 W	

Driver series	Power supply	Rated output	Part No.
MADL*15S*	3-phase, 200 V	200 W	DV0P220
MBDL*25S*		400 W	
MCDL*35S*		750 W	
MDDL*45S**1		850 W	DV0P221
MDDL*45S		1.0 kW	DV0P222
MDDL*55S*		1.3 kW	
MDDL*55S*		1.5 kW	
MEDL*83S*		1.8 kW	DV0P223
MEDL*83S*		2.0 kW	
MEDL*93S*		2.4 kW	DV0P224
MFDL*A3S*		3.0 kW	
MFDL*B3S*		2.9 kW	
MFDL*B3S*		4.0 kW	DV0P225
MFDL*B3S*		4.4 kW	
MFDL*B3S*		5.0 kW	

When using a reactor, be sure to install one reactor to one servo driver.

*1 When using MGMF 0.85 kW motor.

Harmonic restraint

Harmonic restraint measures are not common to all countries. Therefore, prepare the measures that meet the requirements of the destination country.
With products for Japan, on September, 1994, "Guidelines for harmonic restraint on heavy consumers who receive power through high voltage system or extra high voltage system" and "Guidelines for harmonic restraint on household electrical appliances and general-purpose articles" established by the Agency for Natural Resources and Energy of the Ministry of Economy, Trade and Industry (the ex-Ministry of International Trade and Industry). According to those guidelines, the Japan Electrical Manufacturers' Association (JEMA) have prepared technical documents (procedure to execute harmonic restraint: JEM-TR 198, JEM-TR 199 and JEM-TR 201) and have been requesting the users to understand the restraint and to cooperate with us. On January, 2004, it has been decided to exclude the general-purpose inverter and servo driver from the "Guidelines for harmonic restraint on household electrical appliances and general-purpose articles" . After that, the "Guidelines for harmonic restraint on household electrical appliances and general-purpose articles" was abolished on September 6, 2004.
We are pleased to inform you that the procedure to execute the harmonic restraint on general-purpose inverter and servo driver was modified as follows.

1. All types of the general-purpose inverters and servo drivers used by specific users are under the control of the "Guidelines for harmonic restraint on heavy consumers who receive power through high voltage system or extra high voltage system" . The users who are required to apply the guidelines must calculate the equivalent capacity and harmonic current according to the guidelines and must take appropriate countermeasures if the harmonic current exceeds a limit value specified in a contract demand. (Refer to JEM-TR 210 and JEM-TR 225.)
2. The "Guidelines for harmonic restraint on household electrical appliances and general-purpose articles" was abolished on September 6, 2004. However, based on conventional guidelines, JEMA applies the technical documents JEM-TR 226 and JEM-TR 227 to any users who do not fit into the "Guidelines for harmonic restraint on heavy consumers who receive power through high voltage system or extra high voltage system" from a perspective on enlightenment on general harmonic restraint. The purpose of these guidelines is the execution of harmonic restraint at every device by a user as usual to the utmost extent.

8. Options

External Regenerative Resistor

Part No.	Manufacturer's part No.	Specifications					Activation temperature of built-in thermal protector
		Resistance	cable core outside diameter	Mass	Rated power (reference) *1		
					Free air	with fan*2	
		Ω	mm	kg	W	W	
DV0P4280	RF70M	50	φ1.27 (AWG18 stranded wire)	0.1	10	25	140 ± 5 ℃ B-contact Open/Close capacity (resistance load) 1 A 125 VAC 6000 times 0.5 A 250 VAC 10000 times
DV0P4281	RF70M	100		0.1	10	25	
DV0P4282	RF180B	25		0.4	17	50	
DV0P4283	RF180B	50		0.2	17	50	
DV0P4284	RF240	30		0.5	40	100	
DV0P4285	RH450F	20		1.2	52	130	
DV0PM20048	RF240	120		0.5	35	80	
DV0PM20049	RH450F	80		1.2	65	190	

Manufacturer : Iwaki Musen Kenkyusho

*1Power with which the driver can be used without activating the built-in thermal protector.

A built-in thermal fuse and a thermal protector are provided for safety.

The built-in thermal fuse blows depending on changes in heat dissipation condition, operating temperature limit, power supply voltage or load.

Mount the regenerative resistor on a machine operating under aggressive regenerating condition (high power supply voltage, large load inertia, shorter deceleration time, etc.) and make sure that the surface temperature will not exceed 100 ° C.

Select and install a fan that maintains the surface temperature of regenerative resistor at 100 ° C or below during operation.

*2 If the wind speed is 1m / s by the fan.

Frame	Power supply		
	Single phase, 100 V	Single phase, 200 V 3-phase, 200 V	3-phase, 400 V
A	DV0P4280	DV0P4281 (below 100 W) DV0P4283 (200 W)	-
B	DV0P4283	DV0P4283	
C	DV0P4282		
D	—	DV0P4284	DV0PM20048
E		DV0P4284 × 2 in parallel DV0P4285	DV0PM20049
F		DV0P4285 × 2 in parallel	DV0PM20049 × 2 in parallel
G		DV0P4285 × 3 in parallel	DV0PM20049 × 3 in parallel
H		DV0P4285 × 6 in parallel	DV0PM20049 × 6 in parallel

DV0P4280, DV0P4281

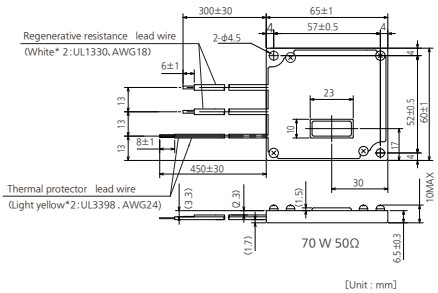

DV0P4282, DV0P4283

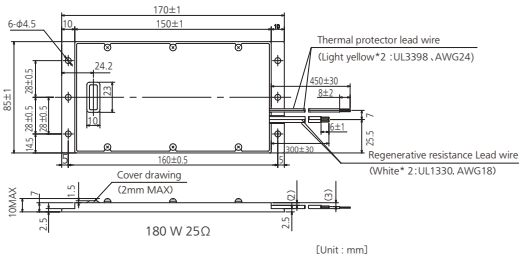

DV0PM4284, DV0PM20048

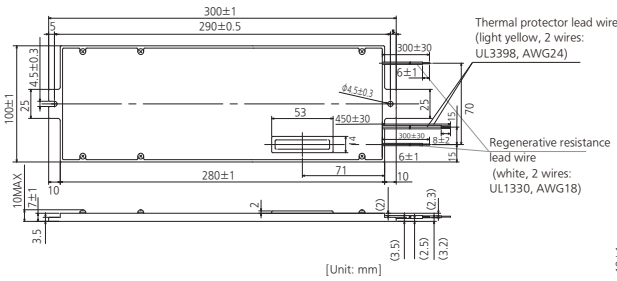

DV0PM4285, DV0PM20049

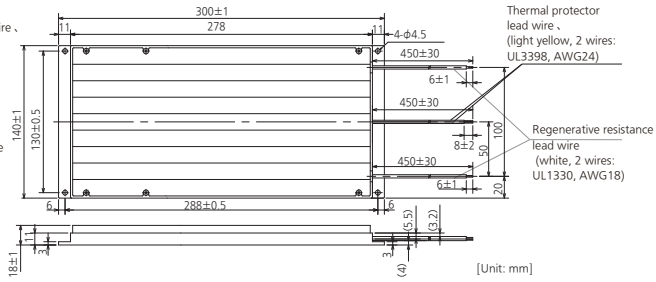

<Caution when using external regenerative resistor>

Regenerative resistor gets very hot.
Configure a circuit so that a power supply shuts down when built-in thermal protector of the regenerative resistor works. Because it is automatic reset thermal protector, please apply a self-holding circuit to the outside in order to maintain safety in case of sudden activation. During the failure of the driver, the surface temperature of the regenerative resistor may exceed the operating temperature before thermal protector starts to work. Built-in thermal fuse of regenerative resistor is intended to prevent from ignition during the failure of the driver and not intended to suppress the surface temperature of the resistor. • Be attached the regenerative resistance to non-combustible material such as metal. • Built-in thermal fuse of regenerative resistor is intended to prevent from ignition during the failure of the driver and not intended to suppress the surface temperature of the resistor. • Do not install the regenerative resistor near flammable materials.

8. Options

Recommended components

Surge absorber for motor brake

Motor		Part No.	Manufacturer
MSMF	50 W to1.0 kW(□80)	TND14V271K	NIPPON CHEMI-CON CORPORATION
	1.0 kW(□100) to3.0 kW	Z15D151	SEMITEC Corporation
	4.0 kW,5.0 kW	NVD07SCD082	KOA Corporation
MQMF	100 W to400 W	TND14V271K	NIPPON CHEMI-CON CORPORATION
MDMF	1.0 kW to3.0 kW	TNR9G820K	NIPPON CHEMI-CON CORPORATION
	4.0 kW	Z15D151	SEMITEC Corporation
	5.0 kW to 22.0 kW	NVD07SCD082	KOA Corporation
MGMF	0.85 kW to 1.8 kW	NVD07SCD082	KOA Corporation
	2.4 kW to 2.9 kW	Z15D151	SEMITEC Corporation
	4.4 kW,5.5 kW	NVD07SCD082	KOA Corporation
MHMF	50 W to 1.0 kW(□80)	TND14V271K	NIPPON CHEMI-CON CORPORATION
	1.0 kW(□130),1.5 kW	NVD07SCD082	KOA Corporation
	2.0 kW to 4.0 kW	Z15D151	SEMITEC Corporation
	5.0 kW,7.5 kW	NVD07SCD082	KOA Corporation

8. Options

List of Peripheral Equipments

Manufacturer	Tel No. / Home Page	Peripheral components
Iwaki Musen Kenkyusho Co., Ltd.	81-44-833-4311 http://www.iwakimusen.co.jp/	Regenerative resistor
NIPPON CHEMI-CON CORPORATION	81-3-5436-7711 http://www.chemi-con.co.jp/e/index.html	Surge absorber for holding brake
SEMITEC Corporation	81-3-3621-2703 http://www.semitec.co.jp/english2/	
KOA CORPORATION	81-42-336-5300 http://www.koanet.co.jp/	
TDK Corp.	81-3-5201-7229 http://www.tdk.co.jp/	Noise filter for signal lines
MICROMETALS (Nisshin Electric Co., Ltd.)	81-4-2934-4151 http://www.nisshin-electric.com/	
KK-CORP.CO.JP	81-184-53-2307 http://www.kk-corp.co.jp/	
Okaya Electric Industries Co. Ltd.	81-3-4544-7040 http://www.okayaelec.co.jp/	Surge absorber Noise filter
Japan Aviation Electronics Industry, Ltd.	81-3-3780-2717 http://www.jae.co.jp	Connector
Sumitomo 3M	81-3-5716-7290 http://solutions.3m.com/	
Tyco Electronics	81-44-844-8052 http://www.tycoelectronics.com/japan/	
Japan Molex Inc.	81-462-65-2313 http://www.molex.co.jp	
J.S.T. Mfg. Co., Ltd.	81-45-543-1271 http://www.jst-mfg.com/	
Daiden Co., Ltd.	81-3-5805-5880 http://www.dyden.co.jp/	Cable
Magnescale Co., Ltd.	81-3-6632-7923 http://www.mgscale.com	External scale
NIDEC INSTRUMENTS	81-3-5740-3000 https://www.nidec.com/en/nidec-instruments/	
Renishaw plc	44-1453-524524 www.renishaw.com	
Fagor Automation S.Coop	34-943-719-200 http://www.fagorautomation.com	
NIDEC MACHINE TOOL	81-75-861-3313 https://www.nidec.com/en/nidec-machinetool/	
RSF Elektronik GmbH	81-3-3234-7781 https://www.rsf.at/de/	

Note Contact information shown above is as of April 2023
This list is for reference only and subject to change without notice.

Manufacturer	Tel No. / Home Page	Peripheral components
Soshin Electronics Co.,Ltd	Kanto region 03-5730-8001 Central region 052-930-5051 Kansai region 06-6396-7701	Noise filter
Schaffner EMC, Inc.	81-3-5712-3650 http://www.schaffner.jp/	
TDK-Lambda Corporation	81-3-5201-7140 http://www.tdk-lambda.com/	

Note

Contact information shown above is as of April 2023
This list is for reference only and subject to change without notice.

9. License Terms for Open Source Software (OSS)

-- BSD-3-Clause--

Copyright (C) 2013 Texas Instruments Incorporated - http://www.ti.com/

Redistribution and use in source and binary forms, with or without modification, are permitted provided that the following conditions are met:

Redistributions of source code must retain the above copyright notice, this list of conditions and the following disclaimer.

Redistributions in binary form must reproduce the above copyright notice, this list of conditions and the following disclaimer in the documentation and/or other materials provided with the distribution.

Neither the name of Texas Instruments Incorporated nor the names of its contributors may be used to endorse or promote products derived from this software without specific prior written permission.

THIS SOFTWARE IS PROVIDED BY THE COPYRIGHT HOLDERS AND CONTRIBUTORS "AS IS" AND ANY EXPRESS OR IMPLIED WARRANTIES, INCLUDING, BUT NOT LIMITED TO, THE IMPLIED WARRANTIES OF MERCHANTABILITY AND FITNESS FOR A PARTICULAR PURPOSE ARE DISCLAIMED. IN NO EVENT SHALL THE COPYRIGHT OWNER OR CONTRIBUTORS BE LIABLE FOR ANY DIRECT, INDIRECT, INCIDENTAL, SPECIAL, EXEMPLARY, OR CONSEQUENTIAL DAMAGES (INCLUDING, BUT NOT LIMITED TO, PROCUREMENT OF SUBSTITUTE GOODS OR SERVICES; LOSS OF USE, DATA, OR PROFITS; OR BUSINESS INTERRUPTION) HOWEVER CAUSED AND ON ANY THEORY OF LIABILITY, WHETHER IN CONTRACT, STRICT LIABILITY, OR TORT (INCLUDING NEGLIGENCE OR OTHERWISE) ARISING IN ANY WAY OUT OF THE USE OF THIS SOFTWARE, EVEN IF ADVISED OF THE POSSIBILITY OF SUCH DAMAGE.

Warranty

Warranty period

- The warranty period is one year from the date of purchase or 18 months from the month of manufacture in our plant.
  For a motor with brake, the axis accelerated and decelerated more times than the specified limit is not covered by warranty.

Warranty information

- Should any defect develop during warranty period under standard service conditions as described in the manual, the company agrees to make repairs free of charge.
  Even during warranty period, the company makes fee-based repair on product containing:
  [1] Failure or damage due to misuse, improper repair or alteration.
  [2] Failure or damage due to falling, or damage during transportation, after the original delivery
  [3] Defects resulting from neglect of the specification in use of the product.
  [4] Failure or damage due to unregulated voltage and fire, and act of natural disasters such as earthquake, lightning, wind, flood and salt pollution.
  [5] Defects resulting from invasion of foreign materials such as water, oil and metal pieces.
  Parts exceeding their standard lifetime specified in this document are excluded.
- The company shall not be liable for any indirect, incidental or consequential damage or loss of any nature that may arise in connection with the product.

Cautions for Proper Use

- Practical considerations for exporting the product or assembly containing the product
  When the end user of the product or end use of the product is associated with military affair or weapon, its export may be controlled by the Foreign Exchange and Foreign Trade Control Law. Complete review of the product to be exported and export formalities should be practiced.
- This product is intended to be used with a general industrial product, but not designed or manufactured to be used in a machine or system that may cause personal death when it is failed.
- Installation, wiring, operation, maintenance, etc., of the equipment should be done by qualified and experienced personnel.
- Apply adequate tightening torque to the product mounting screw by taking into consideration strength of the screw and the characteristics of material to which the product is installed. Overtightening can damage the screw and/or material; undertightening can result in loosening.

  Example) Steel screw into steel section:

M4	1.35 N•m	to	1.65 N•m.
M5	2.7 N•m	to	3.3 N•m.
M6	4.68 N•m	to	5.72 N•m.
M8	11.25 N•m	to	13.75 N•m.
M10	22.05 N•m	to	26.95 N•m.
M11	37.8 N•m	to	46.2 N•m.

- Install a safety equipments or apparatus in your application, when a serious accident or loss of property is expected due to the failure of this product.
- Consult us if the application of this product is under such special conditions and enviroments as nuclear energy control, aerospace, transportation, medical equipment, various safety equipments or equipments which require a lesser air contamination.
- We have been making the best effort to ensure the highest quality of the products, however, application of exceptionally larger external noise disturbance and static electricity, or failure in input power, wiring and components may result in unexpected action. It is highly recommended that you make a fail-safe design and secure the safety in the operative range.
- If the motor shaft is not electrically grounded, it may cause an electrolytic corrosion to the bearing, depending on the condition of the machine and its mounting environment, and may result in the bearing noise. Checking and verification by customer is required.
- Failure of this product depending on its content, may generate smoke of about one cigarette. Take this into consideration when the application of the machine is clean room related.
- Please be careful when using in an environment with high concentrations of sulfur or sulfric gases, as sulfuration can lead to disconnection from the chip resistor or a poor contact connection.
- Take care to avoid inputting a supply voltage which significantly exceeds the rated range to the power supply of this product. Failure to heed this caution may result in damage to the internal parts, causing smoking and/or a fire and other trouble.
- The user is responsible for matching between machine and components in terms of configuration, dimensions, life expectancy, characteristics, when installing the machine or changing specification of the machine. The user is also responsible for complying with applicable laws and regulations.
- The product will not be guaranteed when it is used outside its specification limits.
- Parts are subject to minor change to improve performance.

Revisions

Date	Rev.	Page	Description
Aug. 2016	Rev.1.00	—	Newly issued
Sep. 2024	Rev 6.00	1-5, 7-203	OSS caution statement added
Apr. 2026	Rev.7.00	1-4, 1-5, 2-110, 2-131, 2-142, 4-85	Software upgrade
		2-11, 2-12	Added Peripheral devices
		—	Error correcting

MEMO

After-Sale Service (Repair)

Repair

Consult to a dealer from whom you have purchased the product for details of repair.
When the product is incorporated to the machine or equipment you have purchased, consult to the manufacturer or the dealer of the machine or equipment.

Technical information

- Technical information of this product (Operating Instructions, CAD data) can be downloaded and consulting questions from the following web site.
  industry.panasonic.com/global/en/

For your records:
The model number and serial number of this product can be found on either the back or the bottom of the unit. Please note them in the space provided and keep for future reference.

Date of purchase	Year Month Day	Model No.	
Store name			
	Phone( ) -		

Industrial Device Business Division, Panasonic Industry Co., Ltd.
7-1-1 Morofuku, Daito, Osaka, 574-0044, Japan
© Panasonic Industry Co., Ltd. 2016-2026

IME87
Z0816-7046